Automotive Technician Training

Tom Denton

eTextbook USA

Tom Denton, BA, FIMI, MIRTE, MSAE, Cert Ed

Copyright © 2020

All rights reserved by the author. No part of this publication can be reproduced, stored in a retrieval system, or transmitted in any form or by any means, electronic, mechanical, photocopying, recording or otherwise, without the prior permission of the publishers and/or authors.

This publication does **not** form part of any photocopying license agreement.

Acknowledgements

Over the years many people have helped in the production of my books. I am therefore very grateful to the following companies who provided information and/or permission to reproduce photographs and/or diagrams:

AA Photo Library
AC Delco
Alpine Audio Systems
ATT Training (UK and USA)
Autologic Data Systems
BMW UK
Bosch Gmbh
Bosch Media
C&K Components
Citroën UK
Clarion Car Audio
Delphi Media
Eberspaecher
Fluke Instruments UK
Ford Motor Company
Ford Media
FreeScale Electronics
General Motors
GenRad
Hella UK
Honda Cars UK
Hyundai UK
Jaguar Cars
Kavlico
Loctite
Lucas UK
LucasVarity
Mazda
McLaren Electronic Systems
Mercedes Cars UK
Mitsubishi Cars UK
NGK Plugs
Nissan Cars UK
Most Corporation
Peugeot UK
Philips
PicoTech
Pioneer Radio
Porsche Cars UK
Robert Bosch GmbH.
Robert Bosch UK
Rover Cars
Saab Cars UK
Saab Media
Scandmec
SMSC
Snap-on Tools
Sofanou (France)
Sun Electric UK
Tesla Motors
Thrust SSC Land Speed Team
T&M Auto-Electrical
Toyota Cars UK
Tracker UK
Unipart Group
Valeo
Vauxhall
VDO Instruments
Volvo Media
Volkswagen cars
Wikimedia
ZF Servomatic

If I have used any information, or mentioned a company name that is not listed here, please accept my apologies and let me know so it can be rectified as soon as possible.

Contents

How to use ATT *15*

General Introduction *16*

Vehicle Introduction **16**

Workshop Bench Skills **25**

Introduction 25

Fitting and Machining 25

Filing 26

Drilling 27

Cutting 27

Thread Cutting 28

Joining 31

Nuts And Bolts 32

Adhesives 34

Soldering 35

Brazing 36

Welding 36

Shrinking 38

Riveting 40

Gaskets 40

Sealants 41

Oil Seals 42

The Motor Trade **44**

General Diagnostics *61*

Diagnostic techniques **61**

Introduction 61

Diagnostic process 63
Data sources 70
Diagnostics on paper 72
Mechanical diagnostic techniques 74
Electrical diagnostic techniques 79

Oscilloscope diagnostics 88

Introduction 88
Sensors 88
Actuators 96
Ignition system 100
Other components 102

On board diagnostics (OBD) 105

Introduction 105
On board diagnostic monitors 109
Scanners 115

Diagnostics Simulations 119

Voltmeter tests 119
Oscilloscope tests 127

Brakes 133

Safety, tools & equipment and customer care 133

Health and Safety 133
Tools and Equipment 136
Test Equipment 139
Customer Care 140

Theory and technology 141

Introduction 141
Disc, Drum and Parking Brakes 146

Hydraulic Components 150
Brake Servo Operation 153
Braking-Force Control 156
Rear Wheel Drive Bearings 159
Front Wheel Drive Bearings 161
Stoplights and Reverse Lights 162
Antilock Brake Systems 165
Traction control 171

Service and repair 174

Routine Maintenance 174
Remove, Replace, Strip and Rebuild Components 177

Fault diagnosis 181

Checking the system 181
Inspect and Measure Components 183
Faultfinding and Inspections 185

Suspension and Steering 191

Safety, tools & equipment and customer care 191

Health and Safety 191
Tools and Equipment 194
Test Equipment 198
Customer Care 200

Theory and technology 203

Introduction to Steering 203
Steering Racks and Boxes 206
Introduction to Power Steering 211
Steering Geometry 213
Hydraulic Power Steering 220
Electric Power Steering 224

Types of Wheels 226
Wheel Rims and Fixings 229
Tires Introduction 233
Tire Construction 237
Functions of the Tire 240
Wheel Balancing 242
Reasons for Suspension 244
Springs 249
Shock Absorbers 254
Front Suspension Layouts 258
Rear Suspension Layouts 261
Electronically Controlled Suspension 265
Active Suspension 267

Service and repair 274
Routine Maintenance 274
Remove, Replace, Strip and Rebuild Components 279

Fault diagnosis 285
Checking the System 285
Inspect and Measure Components 288
Faultfinding and Inspections 293

Electrical/Electronic Systems 301

Safety, tools & equipment and customer care 301
Health and Safety 301
Tools and Equipment 306
Test Equipment 308
Customer Care 311

Theory and technology 314
Electricity and the Atom 314

Basic Electrical Circuits and Magnetism 316
Electronic Components and Circuits 319
Vehicle Electrical Components and Circuits 324
Digital Systems 331
Introduction and Battery Construction 336
Battery Capacity and State of Charge 340
Battery Types and Charging 342
Battery Charging 348
Starting System 350
Charging System 358
Lighting Systems 367
Stoplights and Reverse Lights 371
Interior Lighting 374
Lighting Circuits 377
Turn Signals and Hazard Lights 379
New Lighting Technology 383
Sensors 385
Gauges 388
Instrument Displays 391
A Digital Instrumentation System 396
Vehicle Condition Monitoring and Trip Computers 398
Washers, Wipers and Heated Windows 401
Horns, Obstacle Avoidance and Cruise Control 405
Seats, Mirrors, Sunroofs and Central Locking 409
Mobile Multimedia 415
Security Systems 419
Safety Systems 422
Global positioning system (GPS) 428

Multiplexing 435

Controller Area Network (CAN) 439

Central electrical control 451

Service and repair 461

Routine Maintenance 461

Remove, Replace, Strip and Rebuild Components 469

Fault diagnosis 484

Checking the System 484

Inspect and Measure Components 495

Faultfinding and Inspections 505

Engine Performance 521

Safety, tools & equipment and customer care 521

Health and Safety 521

Tools and Equipment 527

Test Equipment 532

Customer Care 535

Theory and technology 537

Introduction and Engine Operating Cycles 537

Cooling Components and Operation 541

Exhaust Systems 546

Air Pollution from Motor Vehicles 548

Environmental Protection 552

Air Supply System and Intake Air Temperature Control 554

Ignition Introduction 559

Electronics and System Operation 562

Dwell and Timing 567

Electronic Systems 569

Ignition Module and ECU 573

Ignition Systems in Use 579

Spark Plugs and Secondary Circuit 589
Fuel Introduction 594
Carburetors (Overview Only) 599
Mechanical Fuel Injection 601
Electronic Fuel-Injection Systems 608
Bosch DI-Motronic 626
Emission Control Systems 630
Turbocharging and Supercharging 634
Catalyst Systems 638

Service and repair 641

Routine Maintenance 641
Remove, Replace, Strip and Rebuild Components 657

Fault diagnosis 675

Checking the System 675
Inspect and Measure Components 687
Faultfinding and Inspections 697

Automatic Transmission and Transaxle 718

Safety, tools & equipment and customer care 718

Health and Safety 718
Tools and Equipment 722
Test Equipment 724
Customer Care 726

Theory and technology 728

Transmission System Overview 728
Torque Converter 732
Automatic Transmission Components 736
Electronic and Hydraulic Control 739
Transaxle Automatic Transmission 744

Constantly Variable Transmission 749

Four-Wheel Drive Systems 753

Direct Shift Gearbox (DSG) 757

Service and Repair 765

Routine Maintenance 765

Remove, Replace, Strip and Rebuild Components 767

Fault Diagnosis 770

Checking the System 770

Inspect and Measure Components 773

Faultfinding and Inspections 775

Engine Repair 779

Safety and customer care 779

Health and Safety 779

Tools and Equipment 784

Test Equipment 790

Customer Care 791

Theory and technology 792

Introduction and Operating Cycles 792

Engine Terminology and Systems 796

Engine Layouts 815

Engine Variations 819

Engine Components 828

Engine Operating Details 832

Engine Designs 839

Valves and Valve Gear 844

Friction and Lubrication 848

Lubricating Oils 850

Oil Lubrication Systems 851

Lubrication System Operation 855
Oil Pumps and Filtration 859
Other Lubrication Components 863
Cooling Introduction 866
System Requirements 868
Cooling Components Introduction 871
Cooling Components 874
Cooling Components Operation 881
Antifreeze 886
Cooling Design 887

Service and repair 889

Routine Maintenance 889
Remove and Refit Components 900

Fault Diagnosis 932

Checking the System 932
Inspect/Measure Components 939
Faultfinding and Inspections 962

Heating and Air Conditioning 972

Safety, tools & equipment and customer care 972

Health and Safety 972
Tools and Equipment 976
Test Equipment 978
Customer Care 980

Theory and technology 981

Cooling Introduction 981
System Requirements 983
Components 986
Components and Operation 992

Antifreeze 998

Vehicle Heating 1000

Heater and Temperature Gauge 1002

Ventilation Systems 1006

Air-Conditioning Fundamentals 1008

Air-Conditioning Components 1011

Other Heating Systems 1015

Service and repair 1018

Routine Maintenance 1018

Remove, Replace, Strip and Rebuild Components 1023

Fault diagnosis 1035

Checking the Cooling System 1035

Inspect and Measure Components 1039

Faultfinding and Inspections 1047

Fixed orifice tube system – Faultfinding table 1055

Expansion valve system – Faultfinding table 1056

Manual Drive Train and Axles 1057

Safety, tools & equipment and customer care 1057

Health and Safety 1057

Tools and Equipment 1060

Test Equipment 1063

Customer Care 1065

Theory and technology 1068

Introduction to Transmission 1068

Purpose of the Clutch Components 1071

Clutch Operating Mechanisms 1074

Diaphragm Clutch 1075

Coil Spring Clutch 1080

Other Types of Clutches 1082
Gearbox Operation 1084
Gears and Components 1087
Gear Change Mechanisms 1091
Synchromesh Mechanisms 1095
Front and Rear Wheel Drive Gearboxes 1097
Rear Wheel Drive Bearings 1101
Front Wheel Drive Bearings 1103
Propshafts 1105
Driveshafts 1108
Differential Operation 1111
Final Drive 1113
Limited Slip Differentials 1116
Other Differentials and Units 1119
Four-Wheel Drive Systems 1122
Traction Control 1126

Service and Repair 1129

Routine Maintenance 1129
Remove, Replace, Strip and Rebuild Components 1134

Fault Diagnosis 1142

Checking the System 1142
Inspect and Measure Components 1149
Faultfinding and Inspections 1156

Additional Automotive Materials 1167

Introduction to Low Carbon Technologies 1167

Low carbon technologies 1167
Air Pollution from motor vehicles 1171
Electric vehicles (EVs) 1174

Hydrogen electric vehicles (HEVs) 1178

Hybrid vehicles (HVs) 1185

Alternative fuels 1190

Diesel Systems 1196

Diesel Introduction 1196

Bosch VE Pump System 1204

Bosch VR System 1209

Bosch CR system 1214

Lucas EPIC system 1221

Unit injection system 1225

Hybrid Vehicles – Integrated Motor Assist (IMA) 1230

Introduction 1230

Components and system operation 1241

Repairs and Diagnostics 1253

How to use ATT

Introduction This book is for use with the *Automotive Technician Training* computer based learning material. The text and images are the same on screen and in this book – most importantly, the images on screen are much larger and often animated. If you need a larger hard-copy image at any time – just right click the screen and choose 'Print'.

Diagrams Most of the diagrams in this book have numbered (or similar) labels. Use the computer material to find out what the labels should say and then write them in to the book. In some cases there will be a blank space where the diagram from the screen can be drawn in.

Learning Use this book as a workbook, make notes, underline things, make sketches and highlight important points. There are lots of 'white' spaces in the book where you could add bullet points for example. However, this is your book, so use it in whatever way works for you!

Worksheets Use the worksheets in the repair shop as a reminder of how to carry out practical tasks. An overview of each main task is included in this book with a numbered link to the actual worksheet in the support book or for printing from the computer. Complete all the worksheets and the task list will be covered. However, additional or different worksheet tasks can be used and written in to the overview/record table as required.

Assignments Written assignments are included in the support book (or they can be printed). Use the computer material and textbook to answer the assignments.

Computer based material You may access the computer based materials through your college or training center. However, the same learning screens, questions, worksheets, activities (and more) are also available online.

Structure The textbook is set out in chapters that cover the ASE/NATEF units, and each is split into four topics:

- Safety, tools & equipment and customer care
- Theory and technology
- Service and repair
- Fault diagnosis

Each of these areas is split into smaller sections so that it is easy to find what you need.

Symbols A number of different symbols are used as a reminder that you should complete different tasks. Use the computer based material to complete these tasks.

Re-read the previous section and complete the bullet points box

Check the computer for animations or videos (💻)

Complete self-assessment questions or written tasks

Draw a diagram in this space

#. Task list worksheets

General Introduction

(Remember to add notes from each screen and write bullet points as you work through the material)

Vehicle Introduction

Introduction This section is a general introduction to the car as a whole. Over the years many unusual designs have been tried, some with more success than others. The most common is of course a rectangular vehicle with a wheel at each corner! To take this rather simple idea further, we can now put 'light vehicles' in one of five groups.

- Front engine driving the front wheels
- Front engine driving the rear wheels
- Front engine driving all four wheels
- Rear engine driving the rear wheels
- Mid engine driving the rear wheels

The most common layout these days is the front engine, front wheel drive vehicle. This will be examined in more detail in a later.

Terminology Here are some useful words and abbreviations to learn:

FWD

RWD

AWD

4WD

Light vehicle

Light vehicle types These can range from small two seater sports cars to quite large people carriers or SUVs. Also included in the range are light commercial vehicles such as vans and pick up trucks. Shown here are a number of different types; saloon, estate, hatchback, coupe, convertible, van and a pick-up truck.

Vehicle systems This is a term used to describe a set of related components on the vehicle. For example all the components used to make the brakes work, are described simply as the 'braking system'.

A piece of history As you learn more about the fascinating world of the automobile, you will keep meeting 'new' technologies. I have included a list of events and dates for you to see that some new ideas are not as 'new' as you first thought! By the way you don't need to learn this bit, it is for interest only.

1769 Cugnot built a steam tractor in France.

1801 Trevithick built a steam coach.

1860 Lenoir built an internal-combustion gas engine.

1876 Otto improved the gas engine.

1885 Daimler developed a petrol engine and fitted it to a bicycle.

1885 Benz fitted his petrol engine to a three-wheeled carriage.

1906 Rolls-Royce introduced the Silver Ghost.

1908 Ford also used an assembly-line production to manufacture the Model T.

1911 Cadillac introduced the electric starter and dynamo lighting.

1914 Cadillac produce a V-type, water-cooled, eight-cylinder engine.

1914 Cadillac becomes the first to use thermostatic control of a cooling system.

1938 Germany produced the Volkswagen Beetle.

1939 The industry's first rear turn signals to use flasher are introduced by Buick.

1948 Jaguar launched the XK120 sports car and Michelin introduced a radial-ply tire.

1955 Citroen introduced a car with hydro-pneumatic suspension.

1957 Wankel built his first rotary petrol engine.

1959 BMC (Rover Cars) introduced the Mini.

1966 California brought in legislation regarding air pollution by cars.

1991 European Parliament voted to adopt stringent control of car emissions.

2005 OnStar and electronic stability control will be standard features on most retail vehicles

2006 Satellite navigation systems are used on many vehicles

2007 Telematics becomes more important and more accurate satellite navigation is introduced

2013 The story continues with you!

Front engine FWD A design of vehicle with the engine at the front has a number of advantages.

- Protection in case of a front end collision
- Easier engine cooling because of the air flow
- Cornering can be better if the weight is at the front

Front wheel drive adds further advantages particularly if the engine is mounted sideways on (transversely).

- More room in the passenger compartment
- Power unit can be made as a complete unit
- Drive acts in the same direction that the steered wheels are pointing

Front engine RWD Rear wheel drive from a front engine was the method used for many years. Some manufacturers have continued its use, BMW for example. A long propeller shaft from the gearbox to the final drive, which is part of the rear axle, is the main feature. The propshaft has universal joints to allow for suspension movement. This layout has some advantages.

- Weight transfers to the rear driving wheels when accelerating.
- Complicated constant velocity joints such as used by front wheel drive vehicles, are not needed.

Four wheel drive combines all the good points mentioned above but does make the vehicle more complicated and therefore expensive. The main difference with four wheel drive is that an extra gearbox known as a transfer box is needed to link the front and rear wheel drive.

Rear engine The rear engine design has not been very popular but it was used for the best selling car of all time - the VW beetle. The advantages are that weight is placed on the rear wheels giving good grip and the power unit and drive can be all one assembly. One down side is that less room is available for luggage in the front. The biggest problem is that handling is affected because of less weight on the steered wheels. Flat type engines are the most common choice for this type of vehicle.

Mid engine Fitting the engine in the mid position of a car has one major disadvantage; it takes up space inside the vehicle. This makes it impractical for most 'normal' vehicles. However, the distribution of weight is very good. This makes it the choice of high performance vehicle designers. A good example is the Ferrari Testarossa. Mid engine is used to describe any vehicle where the engine is between the axles, even if it is not in the middle!

Chassis Vehicle chassis can be of two main types: separate or integrated. Separate chassis are usually used on heavier vehicles. The integrated type, often called monocoque, is used for almost all cars.

The two types are shown here.

Separate chassis

Integrated chassis

Body Shown here is a car and a list of body panel names.

Click the buttons in turn to reveal the panel or other body component.

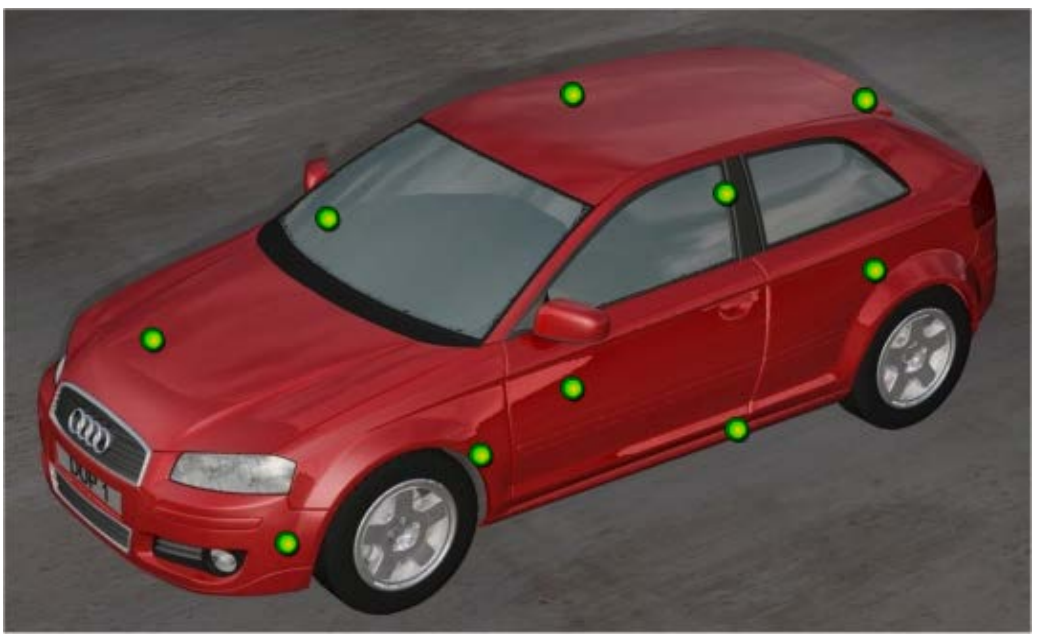

Name the panels

Front engine FWD detailed layout Front engine front wheel drive is now the most common layout, so this will be used for a more detailed explanation. All layout designs however, have similar major components and these operate in much the same way. The main systems of a front engine front wheel drive car are as follows:

- Power train, consisting of; Engine, clutch, gearbox, final drive and drive shafts (engine and transmission system combined).
- Braking system
- Steering system
- Suspension system
- Electrical system

Powertrain There are various groupings of engine, clutch, gearbox and final drive. One of the most common is shown here. The basic power flow, meaning the way in which energy is passed through the system, is as follows:

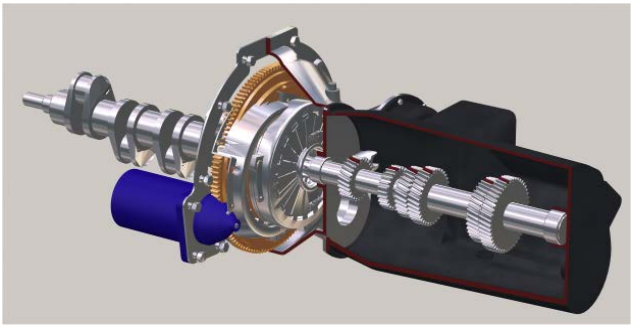

As fuel and air mixture is ignited above the pistons, they push on connecting rods which are on cranks, just like a cyclists legs driving pedals. This makes the crankshaft rotate. Power is passed through the clutch and then through a gearbox. The output of the gearbox is linked to the final drive. This then applies the power to the front wheels through drive shafts. These shafts have joints so they can move with the steering and suspension.

Engine A fuel air mixture enters through an inlet manifold and is fired in each cylinder in turn. This expands and pushes down on the piston. The spent gases leave via the exhaust system. The power is applied to the crankshaft. The pulses of power from each piston are smoothed out by a heavy flywheel. Power leaves the engine through the flywheel which is fitted on the rear of the rotating crankshaft and passes to the clutch.

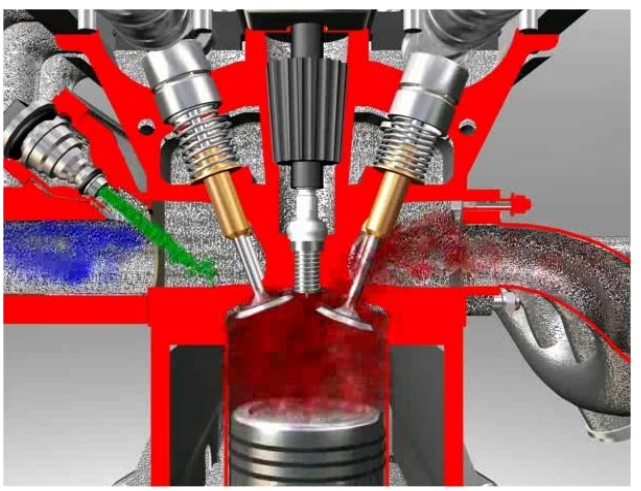

Clutch The clutch is to allow the driver to disconnect drive from the engine and move the vehicle off from rest. The engine flywheel and clutch cover are bolted together so the cover always rotates with the engine. A pressure plate and clutch springs are mounted on the cover.

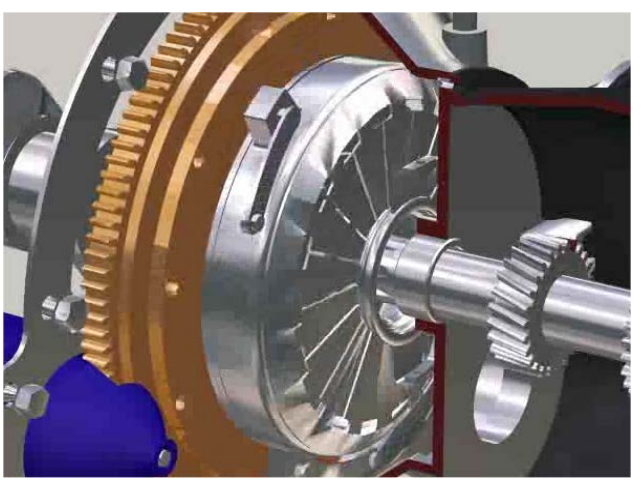

A gearbox shaft is fixed so that it rotates with the clutch driven plate but it can slide slightly. The clutch, or driven plate has friction linings. The clutch is engaged when the pedal is up because the clutch springs and pressure plate hold the driven plate against the flywheel. This makes the drive pass to the gearbox.

To disengage the clutch the pedal is pressed down. A release bearing makes the pressure plate move back away from the flywheel, and frees the driven plate from the flywheel. No drive is now passed to the gearbox.

Gearbox A gearbox is needed because an engine produces power only when turning quite fast. The gearbox allows the driver to keep the engine at its best speed. When the gearbox is in neutral, power does not leave it. When the gearbox is in first gear, power is transferred from a small to a larger gear, and then out to the final drive. Different stages of speed reduction (second and third gear) are created using different sizes of gear. Less speed out of the gearbox has a higher turning force (torque) because the engine is running faster. Fourth gear normally makes the output shaft turn at the same speed as the engine. Fifth gear makes the output shaft run faster than the engine for economical higher speed driving.

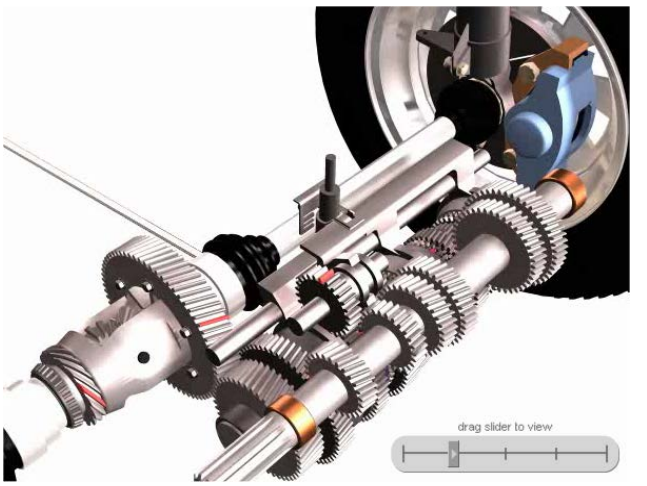

Final drive The final drive assembly of a front wheel drive vehicle has two main tasks:

- Further speed reduction of about 3:1. This is output gear to pinion ratio which will vary with different types of vehicles and engines.
- Different speeds to the drive shafts must be possible by a unit called the differential. This is needed because when the vehicle is cornering the road wheels turn at different speeds.

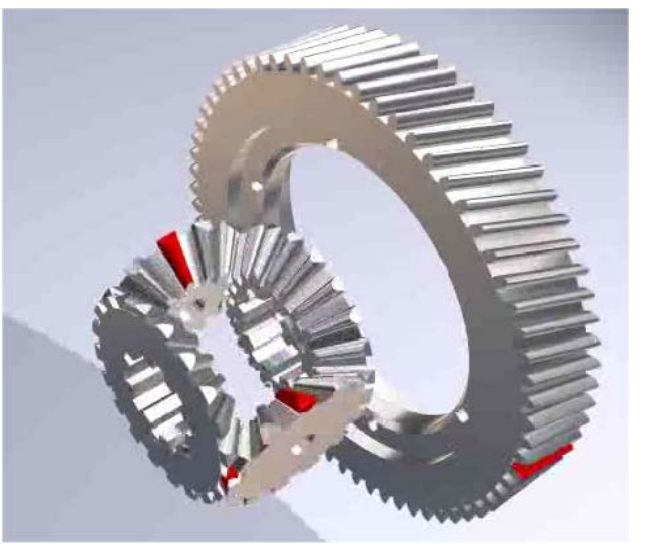

Drive shafts The two drive shafts each have two constant velocity (CV) joints. They are heavy duty steel shafts and simply pass the drive to the wheels. The joints are needed because the movement of the steering and suspension changes the position of the wheels.

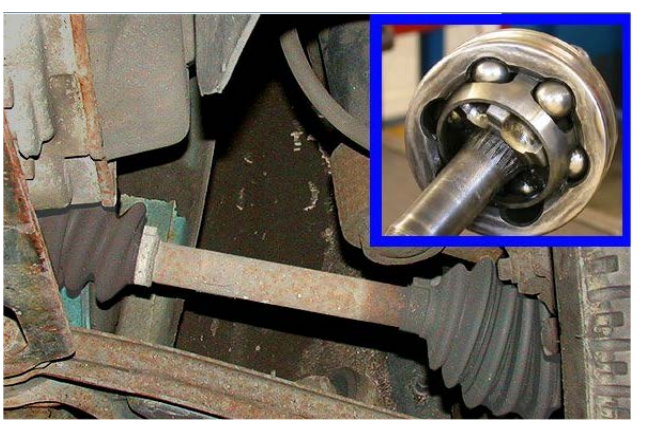

Braking system Hydraulic brakes are used to slow down or stop the vehicle. The hand brake uses a mechanical linkage to operate parking brakes. The main brakes work on all four wheels and the hand brake usually just on the rear.

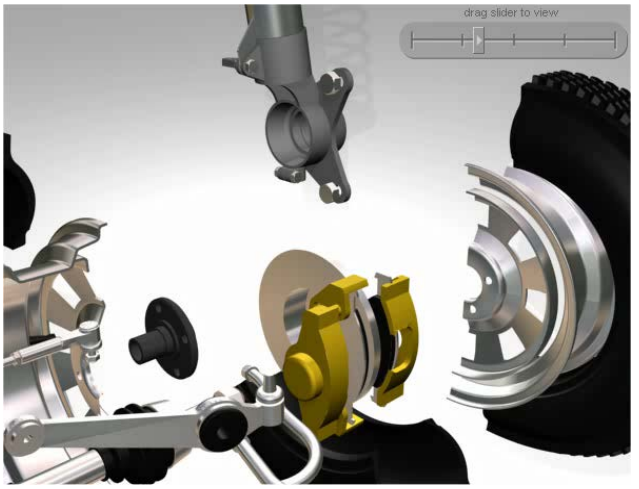

The hydraulic principle is that foot pressure on the brake pedal pushes fluid under pressure to all four wheels. Braking materials (friction linings) are pressed against rotating surfaces, slowing them down thereby slowing down the vehicle. Discs, normally on the front, are gripped between pads of friction lining. Drums, normally on the rear, are gripped on their inside surfaces by shoes covered with friction lining. This is the most common arrangement but some vehicles have all drums or all discs.

Steering system Both front wheels are linked mechanically and must turn together to provide steering control. The image here shows a rack and pinion. The steering wheel is linked to the pinion and as this is turned it moves the rack to and fro. This moves both the wheels. Many vehicles have power assisted steering which uses a pump driven by the engine to make turning the steering wheel easier. Some very modern systems use small electric motors for this task.

Suspension system The main reasons for the suspension system are as follows:

- Absorb road surface faults (shocks) to give a comfortable ride
- Keep the tyres in contact with the road surface
- Resist braking and steering forces
- Allow for different loads of passengers and luggage

A single trailing arm with coil springs and damper on the rear and strut with a coil spring and built in damper on the front are shown here. Many variations of design are used but the principle is the same.

Tyres also absorb road shock and play a very important part in road holding. Most of the remaining shocks and vibrations are absorbed by springs in the drivers and passengers seats.

Draw the suspension before and after the wheel hits a bump…

Electrical system The electrical system covers many aspects such as lighting, wipers and instrumentation. A key aspect is the production of a spark to ignite the fuel (unless the engine is diesel of course). An alternator, driven by the engine, produces electricity to run the electrical systems and charge the battery.

Modern electrical system

Alternator

Summary Layouts of a vehicle vary as do body styles and shapes. However, the main systems of a light vehicle are very similar. These are the:

- Power train
- Braking system
- Steering system
- Suspension system
- Electrical system

These systems are covered in more detail in other sections of 'Automotive Technician Training', Enjoy!

Read the previous section again and note down some key bullet points here:

-
-
-
-
-

Workshop Bench Skills

Introduction

As well as the obvious skills such as knowledge of the systems and the ability to use normal hand tools for vehicle repairs, bench fitting and in some cases machining skills are also essential.

This usually involves metal cutting operations but it can involve other materials such as wood and plastics. In this sense the work cutting is a very general term and can refer to:

- Sawing
- Drilling
- Filing
- Tapping
- Machining

These aspects will be examined in a little more detail in the following sections.

Fitting and Machining

Fitting and machining skills may be needed to complete a particular job. In the context of an automotive engineer, we often use the term 'fitting' as a general description of hand skills usually used on a work bench or similar, to construct an item that cannot be easily purchased; a support bracket for a modified exhaust or a spacer plate to allow the connection of an accessory of some type such as additional lights.

Repairs using lathe (Source: Wikimedia)

Machinists usually work to very small tolerances, ±0.1 mm for example and deal with all aspects of shaping and cutting. The operations most often carried out by machinists are milling, drilling, turning, and grinding. To carry out fitting or machining operations you should be familiar with:

- Measuring tools such as a micrometer
- Hand tools as found in a standard tool kit
- Machine tools such as a bench drill
- Work holders for example a vice
- Tool holders such as the chuck of a drill
- Cutting tools like saws and files

Tool kit

Bench Drill

Filing

Filing is the process of removing material when manufacturing something; it is used mostly for finishing operations. Filing can be used on a wide range of materials as a finishing process. Emery paper may be considered as a filing tool.

Hand filling (Source: South Thames College)

Files have forward-facing cutting teeth that cut best when pushed over the workpiece. A process known as draw filing involves turning the file sideways and pushing or pulling it across the work. This catches the teeth of the file sideways and results in a very fine shaving action.

Files come in a wide variety of sizes, shapes, cuts, and tooth configurations. The most common cross-sections of a file are: flat, round, half-round, triangular and square. The cut of the file refers to how fine its teeth are. They are described, from roughest to smoothest, as: rough, middle, bastard, second cut, smooth, and dead smooth. The picture shows three common file cuts. Most files have teeth on all faces, but some flat files have teeth only on one face or edge, so that the file can work against another edge without causing damage.

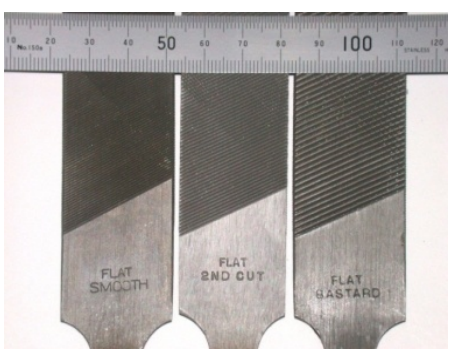

Three common types of file (Source: Glenn McKechnie, Wikipedia)

Drilling

Drilling is a cutting process that uses a drill bit to cut or enlarge a hole in a solid material. The drill bit cuts by applying pressure and rotation to the workpiece, which forms chips at the cutting edge (see figure 1-80). The flutes remove these chips.

In use, drill bits have a tendency to 'walk' if not held very steadily. This can be minimized by keeping the drill perpendicular to the work surface. This walking or slipping across the surface can be prevented by making a centring mark before drilling. This is most often done by centre punching. If a large hole is needed, then centre drilling with a smaller bit may be necessary.

Make sure the safe guard is in place before drilling

Drill bits used for metalworking will also work in wood. However, they tend to chip or break the wood particularly at the exit of the hole. Some materials like plastics have a tendency to heat up enough during the drilling process. This heat can make the material expand resulting in a hole that is smaller than the drill bit used.

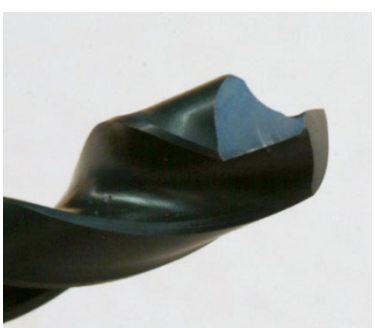

Cutting edges and flutes of a drill bit

Cutting

A hacksaw is a fine-tooth saw with a blade under tension in a frame. Hand-held hacksaws consist of a metal arch with a handle, usually a pistol grip, with pins for attaching a narrow disposable blade. A screw or other mechanism is used to put the blade under tension. The blade can be mounted with the teeth facing toward or away from the handle, resulting in cutting action on either the push or pull stroke. The push stroke is most common.

Blades are available in standardized lengths, usually 10 or 12 inches (15 or 30 cm) for a standard hacksaw. Junior hacksaws are usually half this size. Powered hacksaws may use large blades in a range of sizes.

Junior hacksaw (Source: Evan-Amos, Wikipedia)

The pitch of the teeth can vary from eighteen to thirty-two teeth per inch (TPI) for a hand hacksaw blade. The blade chosen is based on the thickness of the material being cut, with a minimum of three teeth in the material. As hacksaw teeth are so small, they are set in a wave so that the resulting cut is wider than the blade to prevent jamming. Hacksaw blades are often brittle so care needs to be taken to prevent fracture.

Sawing machine (Source: Wikimedia)

Thread Cutting

Taps and dies are cutting tools used to create screw threads. A tap is used to cut the female part of the mating pair (e.g., a nut) and a die is used to cut the male portion (e.g., a screw). Cutting threads using a tap is called tapping and using a die is called threading. Both tools can also be used to clean a thread in a process known as chasing. The use of a suitable lubricant is recommended for most threading operations.

Figure 0-1Die stock

Die

taps

Figure 0-2Tap Wrench

A tap cuts a thread on the inside surface of a hole, creating a female surface which functions like a nut. The three taps in picture show the three basic types:

- The bottoming tap has a continuous cutting edge with almost no taper, which allows it to cut threads to the bottom of a blind hole.
- The intermediate tap, second tap, or plug tap has tapered cutting edges, which assist in aligning and starting it into an untapped hole.
- The taper tap is similar to a plug tap but has a longer taper, which results in a more gradual cutting action.

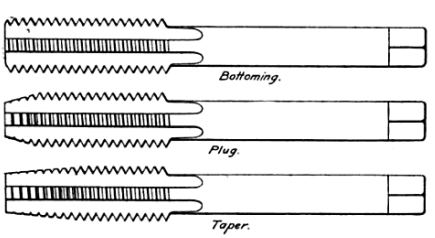

Taper, plug and bottoming taps (Source: Glenn McKechnie, Wikipedia)

The process of tapping begins with drilling and slightly countersinking a hole. The diameter of the hole is determined by using a drill and tap size chart.

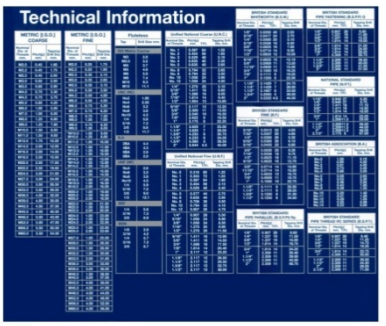

Tap drill size chart

A ‘T’ shaped handle is used to rotate the tap. This is often turned in steps of one turn clockwise and about a quarter turn back. This helps to break off the chips, which avoids jamming. With hard materials, it is common to start with a taper tap, because the shallower cut reduces the amount of torque required to make the threads. If threads are to be cut to the bottom of a blind hole, the taper tap is followed by an intermediate (plug) tap and a bottoming tap.

Dies (Source: Glenn McKechnie, Wikipedia)

The die cuts a thread on a cylindrical rod, which creates a male threaded piece that functions like a bolt. The rod is usually just less than the required diameter of the thread and is machined with a taper. This allows the die to start cutting the rod gently, before it cuts enough thread to pull itself along. Adjusting screws on some types of die allow them to be closed or opened slightly to allow small variations in size. Split dies can be adjusted by screws in the die holder. The action used to cut the thread is similar to that used when tapping.

Die nuts have no split for resizing and are made from a hexagonal bar so that a wrench or spanner can be used to turn them. Die nuts are used to clean up existing threads and should not be used to cut new threads.

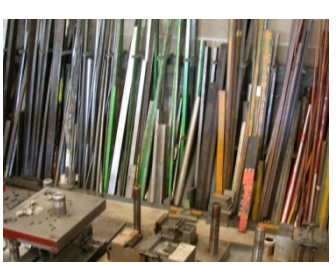

Cylindrical rods

Joining

It is very important for the correct methods of joining to be used in the construction and repair of a modern motor vehicle. Joining can cover many aspects ranging from simple nuts and bolts, to very modern and sophisticated adhesives.

The choice of a joining method for a repair will depend on the original method used as well as consideration of the cost and strength required. Table 1-26 lists some typical joining methods which include the use of gaskets in some cases. An example of the use and useful notes are also given in the table.

Joining methods

Joining method	Example use	Notes
Pins, dowels and keys	Clutch pressure plate to the flywheel	Used for strength and alignment in conjunction with nuts or bolts in most cases.
Riveting	Some brake shoe linings	This involves metal pegs which are deformed to make the joint. The picture shows some pop rivets which are a popular repair component
Compression fitting	Wheel bearings	Often also called an interference fit. The part to be fitted is slightly too large or small as appropriate and therefore pressure has to be used to make the part fit.
Shrinking	Flywheel ring gear	The ring gear is heated to make it expand and then fitted in position. As it cools it contracts and holds firmly in place.
Adhesives	Body panels and sound deadening	Adhesive or glue is now very popular as it is often cheap, quick, easy and waterproof. Also when two items are bonded together the whole structure becomes stronger.
Nuts, screws, washers and bolts	Just about everything!	Metric sizes are now most common but many other sizes and thread patterns are available. This is a very convenient and strong fixing method. The image shows how varied the different types are
Welding	Exhaust pipes and boxes	There are several methods of welding. Oxy-Acetylene and MIG being the most common. The principle is simple in that the parts to be joined are melted so they mix together and then set in position.
Brazing	Some body panels	Brazing involves using high temperatures to melt brass which forms the join between two metal components.
Soldering	Electrical connections	Solder is made from lead and tin. It is melted with an electric iron to make it flow into the joint.
Clips, clamps and ties!	Hoses cables etc.	Hose clips for example, are designed to secure a hose to say the radiator and prevent it leaking.

A selection of joining or fastening components

Methods of joining are described as permanent or non-permanent. The best example of the first of permanent joining is any form of welding. An example of the second would be nuts and bolts. In simple terms then, the permanent methods would mean some damage would occur if the joint had to be undone.

Nuts And Bolts

The nut and bolt is by far the most common method of joining two components together. This picture shows some common nuts and bolts. The head of the bolt is usually a hexagon, but an Allen socket or a Torx® drive or a number of other designs are used. Smaller bolts can have a screwdriver type head such as a slot, cross, Philips, Pozidrive or some other design.

Nuts and bolts

The material used to make a nut or bolt depends on the application. For example, sump bolts will be basic mild steel whereas long through bolts on some engines, are made from sophisticated high tensile steel so that they will stretch. The size of the nut and bolt will of course depend on the size of components to be secured. Thread sizes used to be a problem, but fortunately now most nuts and bolts are metric. The picture shows a metric thread profile.

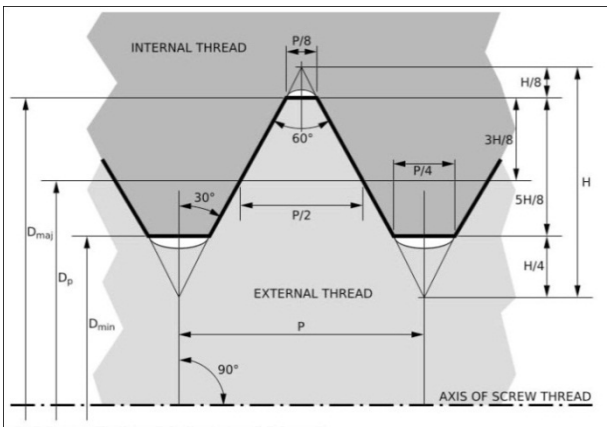

ISO Metric thread profile (the M10 in the given example refers to Dmax and the 1.5 refers to P)

Metric nuts and bolts are described as in the following example:

M10 x 1.5

The M is metric, the 10 is the bolt diameter and the 1.5 is the pitch of the thread.

A bolt

When joining with nuts and bolts it is common to find flat washers and in many cases some type of locking device. Metric threads are quite good at locking in position as they are, but for safety, extra devices are often used. Vibration is the main cause of bolts coming loose, as well as them not being tightened to the correct torque in the first place of course. The picture below shows a selection of locking devices including a Nyloc (nylon lock.)

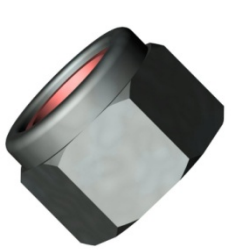

Nyloc Nut

Another common method of securing threads is to use a locking compound such as ‘Loctite’. This is in effect an adhesive which sticks the threads together. When the correct compound is applied with care, it is a very secure way of preventing important components from working loose (figure 1-90).

Loctite® Threadlocker (Source: © 2010 Henkel AG & Co. KGaA, Düsseldorf. All rights reserved)

Adhesives

A very wide range of adhesives is used in today's automotive industry. The number of applications is increasing daily and tending to replace older methods such as welding. There are too many types of adhesives to cover here but most of the basic requirements are the same. It is very important to note however, that manufacturer's instructions must always be followed. This is because of the following:

- Many adhesives give off toxic fumes and must be used with care
- Most types are highly flammable
- Adhesives are often designed for a specific application

Figure 0-3Warning signs on adhesives

Adhesives also have a number of important terms associated with them:

- Cleanliness - Surfaces to be joined must be clean
- Cure - The process of setting often described as 'going off'.
- Wetting - This means that the adhesive spreads evenly and fully over the surface
- Thermo-setting - Meaning that heat is required to cure the adhesive.
- Thermo-plastic - Melts when heated.
- Contact adhesive - Makes a strong joint as soon as contact is made.
- 'Super glue' - Cyanoacrylate adhesive which bonds suitable materials in seconds, including skin - take care!

Loctite super glue

Adhesives have many advantages, which is why they are becoming more widely used. The following are some of the advantages:

- Even stress distribution over the whole surface.
- Waterproof
- Good for joining delicate materials
- No distortion when joining.
- A wide variety of materials can be joined.
- Neat, clean join can be made with little practice.

Interior of Honda Accord

As a final point in relation to adhesives I would stress the importance of choosing the correct type for the job in hand. For example an adhesive designed to bond plastic will not work when joining rubber to metal. And don't forget, if the surfaces to be joined are not clean you will make a very good job of bonding dirt to dirt instead of what you intended!

Soldering

Soft soldering is a process used to join materials such as steel, brass, tin or copper. It involves melting a mixture of lead and tin to act as the bond. A common example of a soldered joint is the electrical connection between the stator and diode pack in an alternator. The picture shows this process using the most common heat source, which is an electric soldering iron.

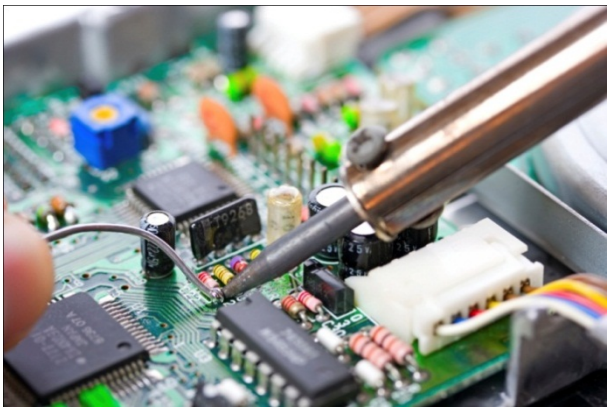

Soldering an electronic circuit

The process of soldering is as follows:

- Prepare the surfaces to be joined by cleaning and using emery cloth or wire wool as appropriate.
- Add a flux to prevent the surfaces becoming dirty with oxide when heated, or use a solder with a flux core.
- Apply heat to the joint and add solder so it runs into the joint.
- Complete the process as quickly as possible to prevent heat damage.
- Use a heat sink if necessary.

Soldering in common with many other things is easy after some practice; take time to do this in your workshop. Note that some materials such as aluminium cannot be soldered by ordinary methods.

Brazing

Brazing is a similar process to soldering except a higher temperature is needed and different filler is used. The materials to be joined are heated to red heat and the filler rod (bronze brass or similar), after being dipped in flux, is applied to the joint. The heat from the materials is enough to melt the rod and it flows into the gap making a good strong, but slightly flexible joint. Dissimilar metals such as brass and steel can also be joined and less heat is required than when fusion welding. Brazing is only used on a few areas of the vehicle body.

Welding

Welding is a method of joining metals by applying heat, combined with pressure in some cases. A filler rod of a similar metal is often used. The welding process joins metals by melting them, fusing the melted areas, and then solidifying the joined area to form a very strong bond. Welding technology is widely used in the automotive industry.

Welding in Process

The principal processes used today are gas and arc welding, in which the heat from a gas flame or an electric arc melts the faces to be joined. The picture shows a welding process in action.

MIG welding process

Several welding processes are used:

- Gas welding uses a mixture of acetylene and oxygen which burns at a very high temperature. This is used to melt the host metal with the addition of a filler rod if required. (OA or oxy-acetylene)
- Shielded metal-arc welding uses an electric arc between an electrode and the work to be joined; the electrode has a coating that decomposes to protect the weld area from contamination and the rod melts to form filler metal (MMA or manual metal arc).
- Gas-shielded arc welding produces a welded joint under a protective gas (MIG or metal inert gas).
- Arc welding produces a welded joint within an active gas (MAG or metal active gas).
- Resistance welding is a method in which the weld is formed by a combination of pressure and resistance heating from an electric current (Spot welding).

TIG welding

MMA Welding

Other, specialised types of welding include laser-beam welding, which makes use of the intensive heat produced by a light beam to melt and join the metals and ultrasonic welding, which creates a bond through the application of high-frequency vibration while the parts to be joined are held under pressure.

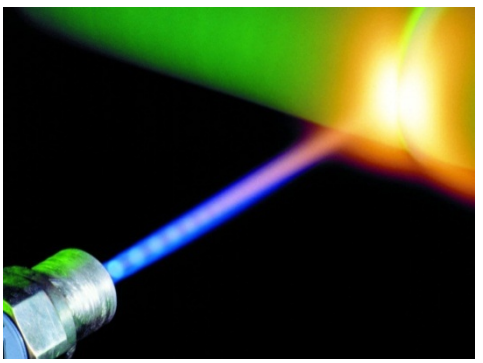

Laser-Beam Welding

Shrinking

When parts are to be fitted by shrinking they first have to be heated so they expand, or cooled so they contract. In both cases the component to be fitted must be made to an exact size. If parts fitted in this way are to be removed, it is usual to destroy them in the process. For example, a flywheel ring gear has to be cut through with a hacksaw to remove it.

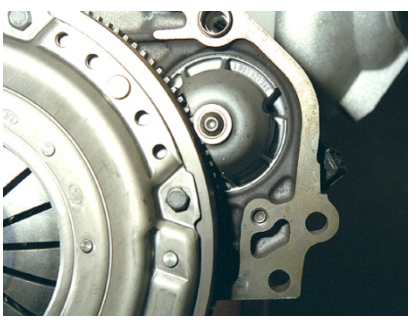

Ring gear on flywheel

For a hot shrink fitting the part will have a smaller internal diameter than the one on which it is to be fitted. It is important not to overheat the components or damage will occur. An oven is best, but a welding torch may be used with great care. When the component has been heated and therefore expanded, it is placed in position at once. It will then cool and make a good tight joint.

Oxy-Acetylene Welding

Cold shrinking is very similar except the component to be fitted is made very slightly larger, than the hole in which it is to be fitted. A cylinder head valve insert is one example. The process is the opposite of hot shrinking. The component is cooled so it contracts, after which it is placed in position where it warms back up and expands, making a secure joint. Cold shrinking is normally a specialist job, but it is possible to buy aerosols of carbon dioxide under pressure which can be used to make a component very cold (dry ice).

Freeze Spray (Source: Maplin)

Compression Fitting

Many parts are fitted by compression or pressure. Bearings are the most common example. The key to compression fitting is an interference fit. This means that the component, say a bearing, is very slightly larger than the hole in which it is to be fitted. Pressure is therefore used to force the bearing onto place. Suspension bushes are often also fitted in this way.

This bearing on a gearbox shaft is held in place by compression

The secret is to apply the force in a way which does not make the components go together on an incorrect angle. They must be fitted true to each other.

Riveting

Riveting is a method of joining metal plates, fabric to metal or brake linings to the shoes. A metal pin called a rivet, which has a head at one end, is inserted into matching holes in two overlapping parts. The other end is struck and formed into another head, holding the parts together. This is the basic principle of riveting but many variations are possible.

Brake lining riveted to a shoe

The picture below shows some pop rivets, which are one of the most common for motor vehicle repair. These are hollow rivets which are already mounted on to a steel pin. The rivet is placed through the holes in the parts to be joined and a special rivet gun grips the pin and pulls it with great force. This causes the second rivet head to be formed and when the pin reaches a set tension it breaks off, leaving the rivet securely in place. The great advantage of this method is that you can work blind. In other words, you don't need access to the other side of the hole!

Pop rivets

Gaskets

Gaskets are used to make a fluid or pressure tight seal between two component faces. The best example of this is the cylinder head gasket which also has to withstand very high pressures and temperatures. Gaskets are often used to make up for less than perfect surfaces and therefore act as a seal between the two. Also as temperature changes, the gasket can take up the difference in expansion between the two components. Gaskets are made from different materials depending on the task they have to perform.

Gaskets and typical uses

Gasket material	Examples of where used
Paper or card	General purpose such as thermostat housings
Fibre	General purpose
Cork	Earlier type rocker covers

Rubber - often synthetic	Water pump sealing ring
Plastics - various types	Fuel pump to engine block
Copper asbestos - or similar	Exhaust flange - note safety issues of asbestos
Copper and aluminium	Head gaskets
Metal and fibre compounds - with metal composites	Head gaskets

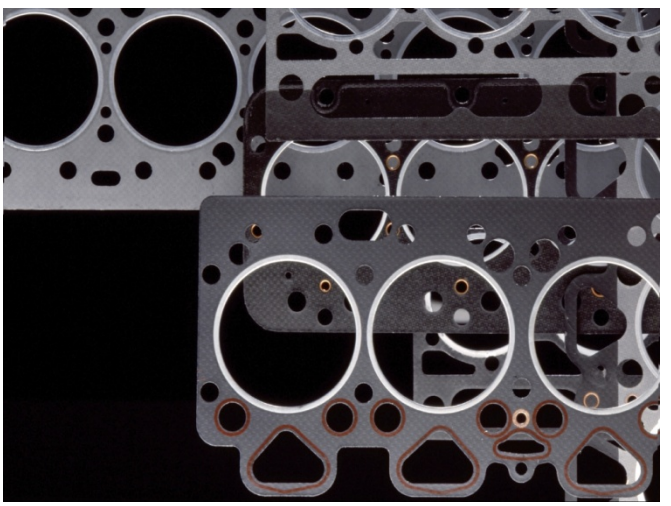

Figure 4 Cylinder head gaskets

The general rules for obtaining a good joint with a gasket or otherwise, are as follows:

- Cleanliness of the surfaces to be joined
- Removal of burrs from the materials
- Use of the correct materials
- Follow manufacturer's instructions (such as tighten to the correct torque in the correct sequence)
- Safe working (this applies to everything you do)

Sealants

Many manufacturers are now specifying the use of sealants in place of traditional gaskets. The main reason for this is a better quality of joint. Liquid sealants, often known as instant gasket, are a type of liquid rubber which forms into a perfect gasket as the surfaces are mated together. The three major advantages of this technique are:

- Easier to apply.
- A perfect seal is made with very small space being taken up.
- Adhesive bonding effect reduces fretting due to vibration and hence is less likely to leak.

Instant gasket

Loctite® Sealant (Source: © 2010 Henkel AG & Co. KGaA, Düsseldorf. All rights reserved)

The picture shows a sealant being applied. A major advantage as far as the repair trade is concerned is that a good selection of jointing sealants, means you can manufacture a gasket on the spot at any time! Note the recommendations of the manufacturers however as only the correct material must be used.

Oil Seals

The most common type of oil seal is the neoprene (synthetic rubber) radial lip seal. The seal is fitted into a recess and the soft lip rubs against the rotating component. The lip is held in place by a spring. Figure x shows this type of seal, note how the lip faces the oil such that any pressure will cause the lip to fit tighter rather than allow oil to be forced underneath. Figure x shows a valve stem oil seal, which prevents oil entering the combustion chamber past the inlet valves.

Oil seals (Source: © 2005 Newsad Energy Company. All Rights Reserved)

Valve stem oil seal

Look back over the previous section and write out a list of the key bullet points here:

The Motor Trade

Introduction This section will outline some of the jobs that are open to you in the motor trade and help you understand more about the different types of business and how they operate.

It is easy to think that the operation of a business does not matter to you. However, I would strongly suggest we should all be interested in the whole business in which we are working. This does not mean to interfere in areas we do not understand. It means we should understand that all parts of the business are important. For example, when you complete a job, enter all the parts used so the person who writes the invoice knows what to charge!

A Volkswagen main dealer

A Ferrari and Maserati main dealer

Opportunities The motor trade offers lots of opportunities for those who are willing to work hard and move forwards. There are many different types of job and you will find one to suit you with a little patience and study.

Ask your boss to give you a 'tour' of the garage so that you can appreciate the different tasks carried out and systems that are in place – in particular, make sure you get a reasonable idea about the words and phrases in the following table. If you do not yet have a job you may be able to arrange a visit.

Modern workshop

Porsche showroom

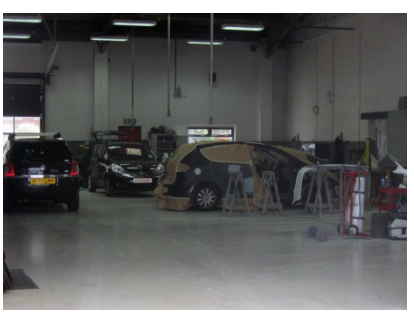

Bodyshop

Key words and phrases Some important words and phrases are presented here:

Customer	The individuals or companies that spend their money at your place of work. This is where your wages come from
Job card	A printed document for recording amongst other things, work required, work done, parts used and the time taken
Invoice	A description of the parts and services supplied with a demand for payment from the customer
Company system	A set way in which things work in one particular company. Most motor vehicle company systems will follow similar rules but will all be a little different
Contract	An offer which is accepted and payment is agreed. If I offer to change your engine oil for £15 and you decide it is a good offer and accept it, we have a contract. This is then binding on us both
Image	This is the impression given by the company to existing and potential customers. Not all companies will want to project the same image
Warranty	An intention that if within an agreed time a problem occurs with the supplied goods or service, it will be rectified free of charge by the supplier

Recording system	An agreed system within a company so that all details of what is requested and/or carried out are recorded. The job card is one of the main parts of this system
Approved repairer	This can mean two things normally. The first is where a particular garage or bodyshop is used by an insurance company to carry out accident repair work. In some cases however, general repair shops may be approved to carry out warranty work
After sales	A term that applies to all aspects of a main dealer that are involved with looking after a customer's car, after it has been sold to them by the sales team. The service/repair workshop is the best example

Types of MV companies Motor vehicle companies can range from the very small one person businesses to very large main dealers. The systems used by each will be different but the requirements are the same.

Motorist discount store

Tyre shop

Ford main dealer

Good signs are important

A fast fit centre

Systems A system should be in place to ensure the level of service provided by the company meets the needs of the customer. The list presented here shows how diverse our trade is.

Mobile mechanics	Servicing and repairs at the owners' home or business. Usually a one-person company.
Bodywork repairers and painters	Specialists in body repair and paintwork.
Valeter	These companies specialise in valeting – which should be thought of as much more involved than getting the car washed. Specialist equipment and products are used and proper training is essential.
Fuel stations	These may be owned by an oil company or be independent. Some also do vehicle repair work
Specialised repairers	Auto-electrical, air conditioning, automatic transmission, and ICE systems are just some examples.
General repair workshop or independent repairer	Servicing and repairs of most types of vehicles not linked to a specific manufacturer. Often this will be a small business maybe employing two or three people. However, there are some very large independent repairers.
Parts supply	Many companies now supply a wide range of parts. Many will deliver to your workshop.
Fast-fit	Supplying and fitting of exhausts, tyres, radiators, batteries, clutches, brakes and windscreens.
Fleet operator (with workshop)	Many large operators such as rental companies, will operate their own workshops. Also a large company that has lots of cars, used by sales reps for example, may also have their own workshop and technicians.
Non-franchised dealer	Main activity is the servicing and repairs of a wide range of vehicles, with some sales.

Main dealers or Franchised dealers	Usually franchised to one manufacturer, these companies hold a stock of vehicles and parts. The main dealer will be able to carry out all repairs to their own type of vehicle as they hold all of the parts and special tools. They also have access to the latest information specific to their franchise (Ford or Citroen for example). A 'franchise' means that the company has had to pay to become associated with a particular manufacturer but is then guaranteed a certain amount of work and that there will be no other similar dealers within a certain distance.
Multi-franchised dealer	This type of dealer is just like the one above – except they hold more than one franchise – Volvo and GM for example.
Breakdown services	The best known breakdown services are operated by the AA and the RAC. Others include Green Flag and of course many independent garages also offer these roadside repair and recovery services.
Motorists shops	Often described as motorist discount centres or similar, these companies provide parts and materials to amateurs but in some cases also to the smaller independent repairers.

Company Structure A larger motor vehicle company will probably be made up of at least the following departments:

- Reception
- Workshop
- Bodyshop and paint shop
- Parts department
- MOT bay
- Valeting
- New and second user car sales
- Office support
- Management
- Cleaning and general duties

Each area will employ one or a number of people. If you work in a very small garage you may have to be all of these people at once! In a large garage it is important that these different areas communicate with each other to ensure that a good service is provided to the customer. The main departments are explained further in the following sections.

Honda reception area

Different departments on a main dealer site

Role of a franchised dealer The role of a franchised dealer is to supply local:

- new and used franchised vehicles
- franchise parts and accessories
- repair and servicing facilities for franchise vehicles.

The dealer is also a source of communication and liaison with the vehicle manufacturer.

One of the ATT company cars (we wish!)

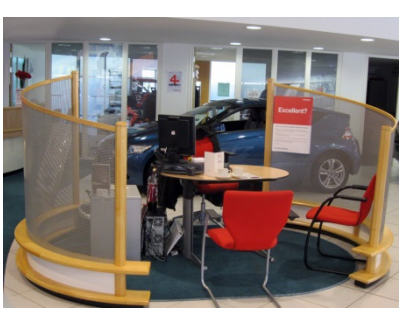

Sales area

Displays in the Maserati dealer are used to present a nice image

Cars on sale in a showroom

Reception and booking systems The reception whether in a large or small company is often the point of first contact with new customers. It is very important therefore to get this bit right. The reception should be manned by pleasant and qualified persons. The purpose of a reception and booking system within a company can be best explained by following through a typical enquiry. Your company may have a slightly different system but it will be similar.

- The customer enters reception area and is greeted in an appropriate way.
- Attention is given to the customer to find out what is required (Let's assume the car is difficult to start, in this case).
- Further questions can be used to determine the particular problem, bearing in mind the knowledge of vehicles the customer may, or may not have, (Is the problem worse when the weather is cold for example).
- Details are recorded on a job card about the customer, the vehicle and the nature of the problem. If the customer is new a record card can be started, or continued for an existing customer.
- Explanation of expected costs is given as appropriate. An agreement to only spend a set amount, after which the customer will be contacted, is a common and sensible approach.
- Date and time when the work will be carried out can now be agreed. This depends on workshop time availability and when is convenient for the customer. It is often better to say you cannot do the job until a certain time, rather than make a promise you can't keep.
- The customer is thanked for visiting. If the vehicle is to be left at that time, the keys should be labelled and stored securely.
- Details are now entered in the workshop diary or loading chart (usually computer based).

Parts department The parts department is the area where parts are kept and or ordered. This will vary quite a lot between different companies. Large main dealers will have a very large stock of parts for their range of vehicles. They will have a parts manager and in some cases several other staff. In some very small garages the parts department will be a few shelves where popular items such as filters and brake pads are kept.

Typical parts department in a main dealer

Typical parts department in an independent retailer

Parts stock Even though the two examples given previously are rather different in scale the basic principles are the same and can be summed up very briefly as follows:

- A set level of parts or stock is decided upon.
- Parts are stored so they can be easily found.
- A reordering system should be used to maintain the stock.

Tyres in stock

Security Security is important as most parts cost a lot of money. When parts are collected from the parts department or area, they will be for use in one of three ways:

- For direct sale to a customer.
- To be used as part of a job.
- For use on company vehicles.

In the first case an invoice or a bill will be produced. The second case, the parts will be entered on the customers job card. The third case may also have a job card or if not some other record must be kept. In all three cases keeping a record of parts used will allow them to be reordered if necessary. If parts are ordered and delivered by an external supplier, again they must be recorded on the customer's job card.

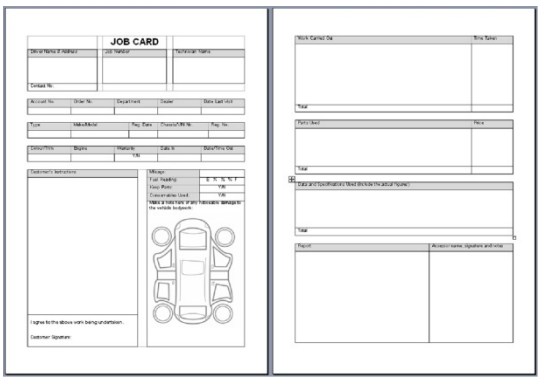

Job card where parts data can be included

Estimating costs and times When a customer brings his or her car to a garage for work to be carried out, quite understandably he or she will want to know two things:

1. How much will it cost?
2. When will it be ready?

In some cases such as for a full-service, this is quite easy as the company will have a set charge and by experience will know it takes a set time. For other types of job this is more difficult.

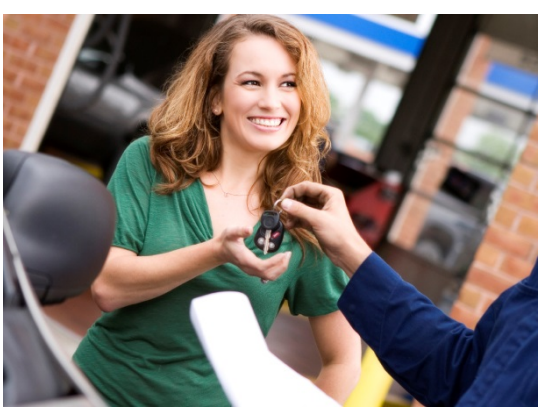

Customer interaction

Standard times Most major manufacturers supply information to their dealers about standard times for jobs. These assume a skilled technician with all the necessary tools. For independent garages a publication known as the ICME manual is available. This gives agreed standard times for all the most common tasks, on all popular makes of vehicle.

To work out the cost of a job, you look up the required time and multiply it by the company's hourly rate. Don't forget the cost of parts will also need to be included.

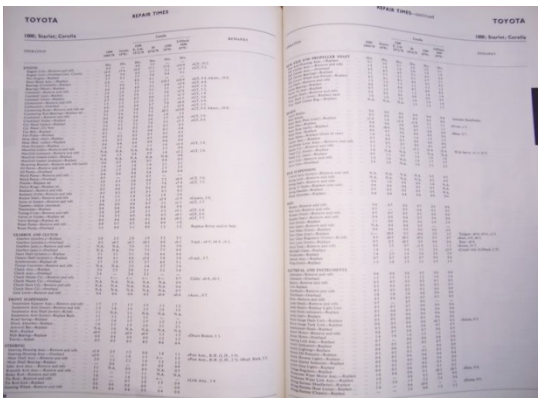

Standard times book

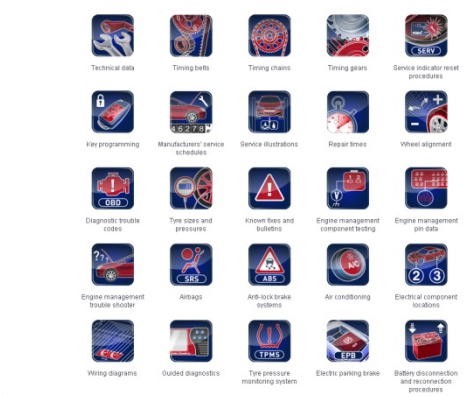

Autodata online information is excellent

Job Cards and Systems The job card is a vital part of the workshop system in a motor vehicle company. Many larger companies may dispense with the 'paper' altogether and use computer systems. These are more expensive to install but allow very fast, easy and accurate communication. Whether job cards or IT systems are used the principle is the same and consists of a number of important stages. This is often described as the four-part job card system:

1. Reception - Customers details and requirements are entered on the job card or computer screen.
2. Workshop control - Jobs are allocated to the appropriate technician using a loading sheet or again via the computer.
3. Parts department - Parts used are added to the computer or job card.
4. Accounts - Invoices are prepared from the information on the job card. Computerised systems may automatically produce the invoice when the job is completed.

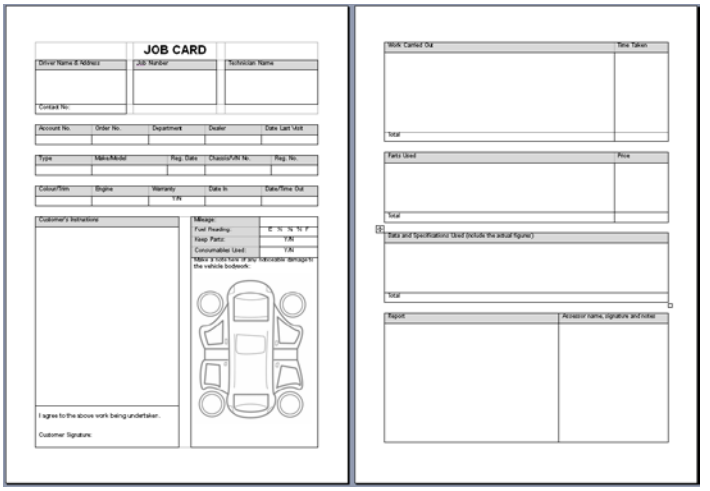

An example job card

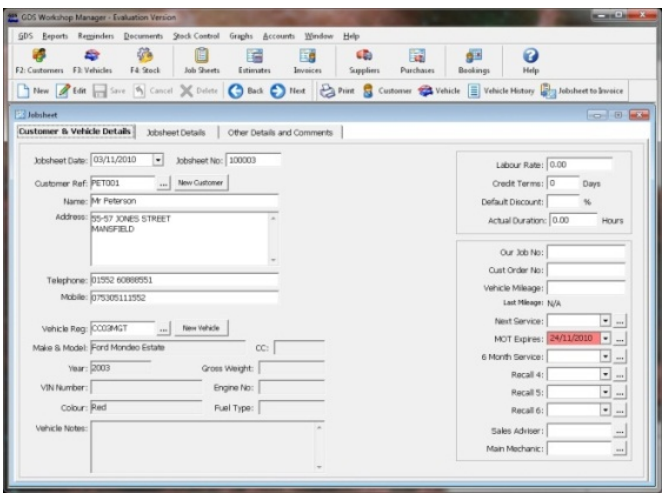

An example computer based job card

Invoicing As part of the contract made with a customer, an invoice for the work carried out is issued. The main parts of an invoice are as follows:

- Labour charges - the cost of doing the work. Usually the time spent times the hourly rate.
- Parts - The retail price of the parts or as agreed.
- Sundries - Some companies add a small sundry charge to cover consumable items like nuts and bolts or cable ties etc.
- MOT test - If appropriate. This is separated because VAT is not charged on MOTs.
- VAT - Value Added Tax - At the current rate, if the company is registered (all but the very small are).

Hourly rates vary quite a lot between different garages. The hourly rate charged by the company has to pay for a lot more than your wages – hence it will be much higher that your hourly rate! Just take a look round in any good workshop, as well as the rent for the premises, some of the equipment can cost tens of thousands of pounds. The money has to come from somewhere.

Invoice example together with other documents

Computerized workshop system introduction There are a number of computer based workshop management systems available. Some are specifically designed for main dealers, some for the smaller independent company. In this section I will outline a system called GDS Workshop Manager as it is designed for the smaller company yet includes some very powerful features and can be used in larger operations.

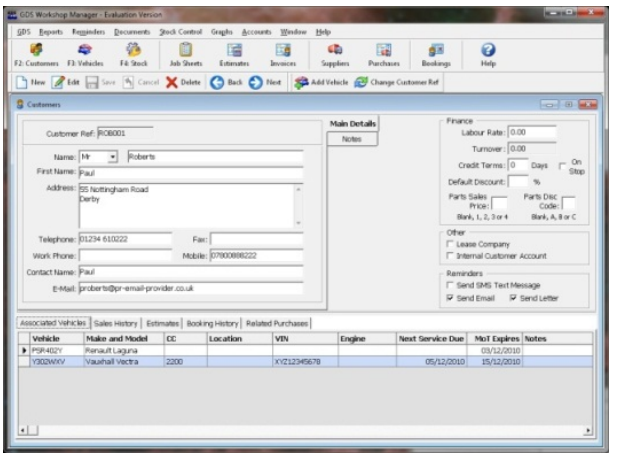

Main interface of the GDS program showing the customers screen

Features The main features of this system are shown in the list on this screen.

- Storage of all customer, vehicle and supplier details
- Production of jobsheets (job cards), estimates, and sales invoices
- Creation of documents using menu priced jobs
- Invoices that can be split into insurance/excess invoices
- Internal billing and cost tracking facilities
- Purchase invoices and stock control
- Diary/booking planner
- MOT and service reminders
- Vehicle registration mark lookup facility
- Repair times and service schedules option

There are many other features relating to accounts and reports that are beyond the scope of this book but are very useful for managing a business.

New record process The core of this and other systems is the data that is held about customers, their vehicles and the work carried out on them. New records can be created from a number of points within the system. The following would be typical of a process:

1. A new customer has a problem with their car and requests an estimate
2. Customer and vehicle details are added, with the help of post code and vehicle registration look-up features
3. The estimate is now created, with the use of repair times look up if needed, and can be printed
4. The customer agrees the price and the vehicle is booked in using the booking screen
5. On the agreed date a jobsheet is printed (or accessed on screen) and the designated technician carries out the work adding parts and comments as needed. A service schedule may also be accessed at this point.
6. An invoice is created and printed (or emailed)
7. And, in an ideal world, the customer pays as they collect the vehicle.

Jobsheet The above process is just one way the system can be used, for example the starting point could be creation of the jobsheet or an invoice. However, in all cases, customer and vehicle details must be added or updated. Existing customer and vehicle records can be easily looked up making the process of creating an invoice or whatever, much faster.

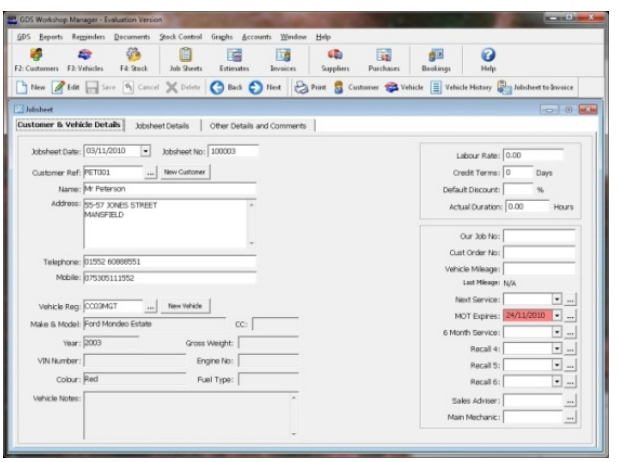

Jobsheet screen

Invoice The invoice details screen can have lines of detail grouped into relevant sections, such as Parts, Labour, MOT etc., as required. Sections can be created and stored as menu jobs to automatically fill in an invoice with often used descriptions, quantities and prices. Invoices can automatically update stock quantities for stock Items. Individual items on the invoice can also be linked to customers in order to aid part warranty checks in the future. Purchased parts can be added directly to a sales invoice which maintains a link to the purchase invoice for future reference.

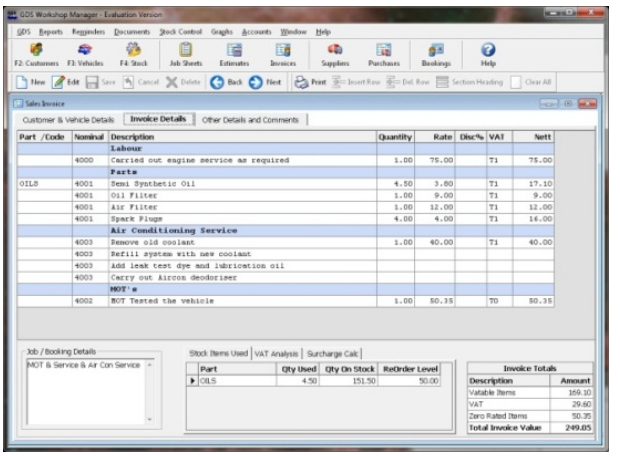

Sales invoice screen

Service schedules GDS Workshop Manager can optionally include a repair times and service schedules database which can be incorporated directly into the system. Vehicle times and service schedules can be looked up as required, or accessed from within the jobsheet, estimate and invoice screens to allow times to be automatically entered directly onto document being worked on. Service schedules for cars and light commercial vehicles can be printed.

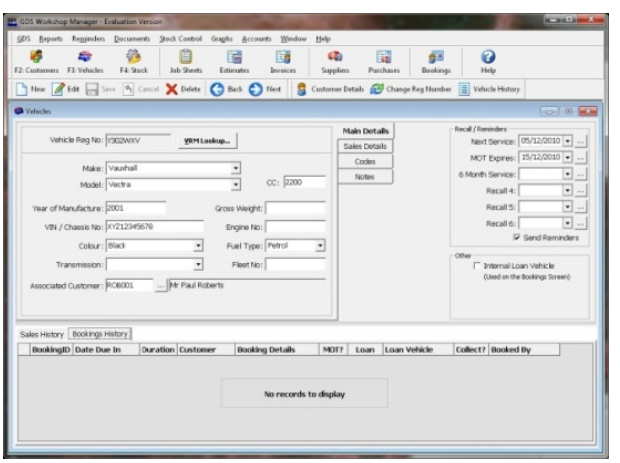

Vehicles screen

Computerized workshop system summary A computer based workshop management system allows the easy creation of all the documentation needed for efficient workshop operation and management. It is now an essential part of a modern garage's tool kit. More information is available from: www.GarageDataSystems.com

Warranties When a vehicle is sold a warranty is given meaning that it is fit for the purpose for which it was sold. Further to this, the manufacturer will repair the vehicle at no cost to the customer, if a problem develops within a set time. For most vehicles this is twelve months but some are now longer. The term generally used for this is 'guarantee'. Quite often manufacturers advertise their guarantee as a selling point.

Special offers such as shown here are in addition to a warranty

Extended warranties It is also possible to have a warranty on a used vehicle or an extended warranty on a new vehicle. These often involve a separate payment to an insurance company. This type of warranty can be quite good but a number of exclusions and requirements may apply. Some examples are listed:

- Regular servicing at an approved dealer.
- Only recommended parts must be used.
- Wear and tear is not included.
- Any work done must be authorised.
- Only recognised repairers may be used in some cases.

Mitsubishi cars

Authorisation The question of authorisation before work is carried out is very important for the garage to understand. Work carried out without proper authorisation will not be paid for. If a customer returns a car within the warranty period then a set procedure must be followed.

- Confirm that the work is within the terms of the warranty.
- Get authorisation if over an agreed limit (Main dealers have agreements with manufacturers).
- Retain all parts replaced for inspection.
- Produce an invoice which relates to standard or agreed times.

Often in the larger garages one person will be responsible for making warranty claims.

If parts are replaced under warranty, they may need to be kept for inspection

The motor trade – Summary To operate a modern automotive business is a complex process. However, the systems outlined in this section have given an overview that shows how when each part of a complex system is examined, it is much easier to understand and appreciate the bigger picture.

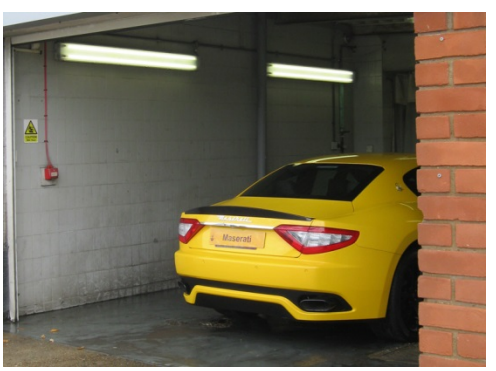

Even the best cars need a wash

Smile, and enjoy your work!

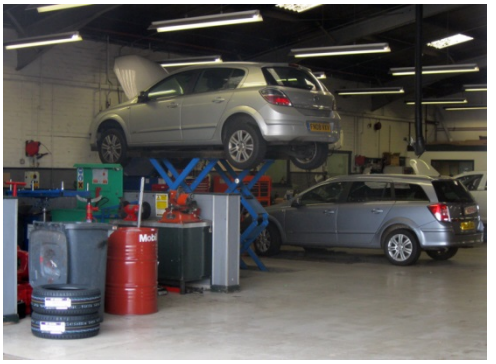

Workshop

Independent garage

Look back over the previous section and write out a list of the key bullet points here:

General Diagnostics

Most of the material in this section relates to Engine Performance, however, some is common to a number of units so is presented here separately.

Diagnostic techniques

Introduction

Logic Diagnostics or faultfinding is a fundamental part of an automotive technician's work. The subject of diagnostics does not relate to individual areas of the vehicle. If your knowledge of a vehicle system is at a suitable level, then you will use the same logical process for diagnosing the fault, whatever the system.

Diagnostics

Terminology 1 The terminology included in the following tables is provided to ensure we are talking the same language. These tables are provided as a simple reference source.

Symptom	The effect of a fault noticed by the driver, user or technician
Fault	The cause of a symptom/problem
Root cause	This may be the same as the fault but in some cases it can be the cause of it
Diagnostics	The process of tracing a fault by means of its symptoms, applying knowledge and analysing test results
Knowledge	The understanding of a system that is required to diagnose faults
Logical procedure	A step by step method used to ensure nothing is missed
Concern, cause, correction	A reminder of the process starting from what the driver reports, to the correction of the problem
Report	A standard format for the presentation of results

Terminology 2 General terminology

System	A collection of components that carry out a function
Efficiency	This is a simple measure of any system. It can be scientific for example if the power out of a system is less than the power put in, its percentage efficiency can be determined (P-out/P-in x 100%). This could for example, be given as say 80%. In a less scientific example, a vehicle using more fuel than normal is said to be inefficient
Noise	Emanations of a sound from a system that is either simply unwanted or is not the normal sound that should be produced
Active	Any system that is in operation all the time (steering for example)
Passive	A system that waits for an event before it is activated (an air bag is a good example)
Short circuit	An electrical conductor is touching something that it should not be (usually another conductor of the chassis)
Open circuit	A circuit that is broken (a switched off switch is an open circuit)
High resistance	In relation to electricity, this is part of a circuit that has become more difficult for the electricity to get through. In a mechanical system a partially blocked pipe would have a resistance to the flow of fluid
Worn	This word works better with further additions such as: Worn to excess, worn out of tolerance or even, worn, but still within tolerance.
Quote	To make an estimate of or give exact information on the price of a part or service. A quotation may often be considered to be legally binding
Estimate	A statement of the expected cost of a certain job (e.g. a service or repairs). An estimate is normally a best guess and is not legally binding
Bad	Not good – and also not descriptive enough really…
Dodgy, knackered or @#%&*.	Words often used to describe a system or component, but they mean nothing. Get used to describing things so that misunderstandings are eliminated

Information Information and data relating to vehicles are available for carrying out many forms of diagnostic work. The data may come as a book, online or on CD/DVD. This information is vital and will ensure that you find the fault – particularly if you have developed the diagnostic skills to go with it. Faultfinding charts and specific examples are presented in later chapters. The general type of information available is as follows:

- engine diagnostics, testing and tuning;
- servicing, repairs and times;
- fuel and ignition systems;
- auto electrics data;
- component location;
- body repairs, tracking and tyres.

Data Source

Where to stop? This is one of the most difficult skills to learn. It is also one of the most important. The secret is twofold:

- know your own limitations – it is not possible to be good at everything;
- leave circuits alone where you could cause more damage or even injury – for example air bag circuits.

Often with the best of intentions, a person new to diagnostics will not only fail to find the fault but introduce more faults into the system in the process. I would suggest you learn your own strengths and weaknesses; you may be confident and good at dealing with mechanical system problems but less so when electronics is involved. Of course you may be just the opposite of this.

Remember that diagnostic skill is in two parts – the knowledge of the system and the ability to apply diagnostics. If you do not yet fully understand a system – leave it alone until you do.

Electrical Testing

Look back over the previous section and write out a list of the key bullet points here:

Diagnostic process

Six-stage process 1 A key checklist – the six stages of fault diagnosis – is given in this list.

1. Verify: Is there actually a problem, can you confirm the symptoms?
2. Collect: Get further information about the problem, by observation and research
3. Evaluate: Stop and think about the evidence
4. Test: Carry out further tests in a logical sequence
5. Rectify: Fix the problem
6. Check: Make sure all systems now work correctly

Six-Stage Process 2 Here is a very simple example to illustrate the diagnostic process. The reported fault is excessive use of engine oil.

1. Question the customer to find out how much oil is being used (is it excessive?).
2. Examine the vehicle for oil leaks and blue smoke from the exhaust. Are there any service bulletins?
3. If leaks are found the engine could still be burning oil but leaks would be a likely cause.

4. A compression test, if the results were acceptable, would indicate a leak to be the most likely fault. Clean down the engine and run for a while. The leak will show up better.
5. Change a gasket or seal, etc.
6. Run through an inspection of the vehicle systems particularly associated with the engine. Double check the fault has been rectified and that you have not caused any further problems.

Engine

Six-stage process 3 The six-stage diagnostic process will be used extensively to illustrate how a logical process can be applied to any situation.

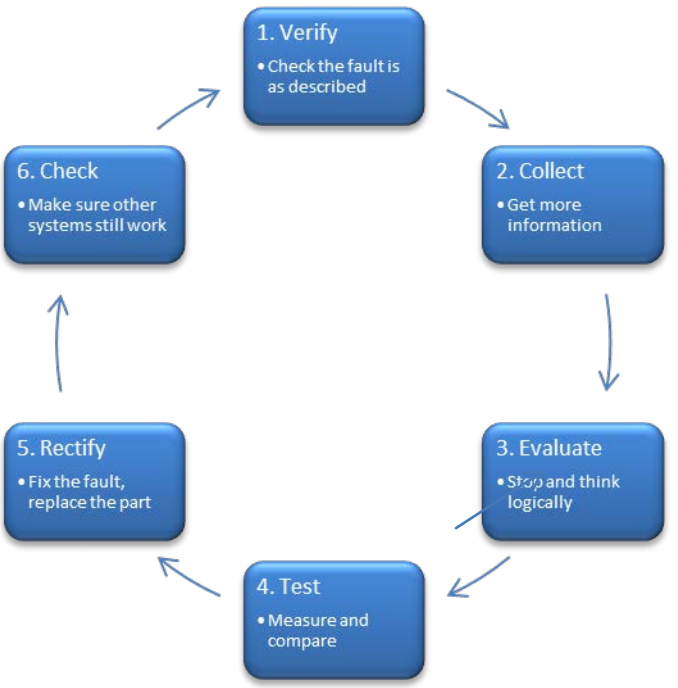

Six-stage diagnostic process in flowchart form

The art of diagnostics 1 The knowledge needed for accurate diagnostics is in two parts:

1. understanding of the system in which the problem exists;
2. having the ability to apply a logical diagnostic routine.

The knowledge requirement and use of diagnostic skills can be illustrated with a very simple example:

After connecting a hose pipe and turning on the tap, no water comes out of the end. Your knowledge of this system tells you that water should come out providing the tap is on, because the pressure from a tap pushes water through the pipe, and so on. This is where your diagnostic skills become essential. The following screen will show the required stages.

The art of diagnostics 2

1. Confirm that no water is coming out by looking down the end of the pipe.
2. Check if water comes out of the other taps, or did it come out of this tap before you connected the hose?
3. Consider what this information tells you; for example, if the answer is 'Yes' the hose must be blocked or kinked
4. Walk the length of the pipe looking for a kink
5. Straighten out the hose
6. Check that water now comes out and that no other problems have been created.

Much simplified I accept, but the procedure you have just followed made the hose work and it is also guaranteed to find a fault in any system. It is easy to see how it works in connection with a hose pipe and I'm sure anybody could have found that fault (well most people anyway).

The art of diagnostics 3 The higher skill is to be able to apply the same logical routine to more complex situations.

I will now explain each of these steps further in relation to a more realistic automotive workshop situation – not that getting the hose to work is not important! Often electrical faults are considered to be the most difficult to diagnose – but this is not true. I will use a vehicle cooling system fault as an example here, but electrical systems will be covered in detail later. Remember that the diagnostic procedure can be applied to any problem, mechanical, electrical or even medical.

However, let's assume that the reported fault with the vehicle is overheating. As is quite common in many workshop situations that's all the information we have to start with. The next screen will explain the stages in more detail.

Diagnostics example Stage 1 Take a quick look to check for obvious problems such as leaks, broken drive belts or lack of coolant. Run the vehicle and confirm that the fault exists. It could be the temperature gauge for example.

- Stage 2 Is the driver available to give more information? For example, does the engine overheat all the time or just when working hard? Check records, if available, of previous work done to the vehicle.
- Stage 3 Consider what you now know. Does this allow you to narrow down what the cause of the fault could be? For example, if the vehicle overheats all the time and it had recently had a new cylinder head gasket fitted, would you be suspicious about this? Don't let two and two make five, but do let it act as a pointer. Remember that in the science of logical diagnostics, two and two always makes four. However, until you know this for certain then play the best odds to narrow down the fault.
- Stage 4 The further tests carried out would now be directed by your thinking at stage three. You don't yet know if the fault is a leaking head gasket, the thermostat stuck closed or some other problem. Playing the odds, a cooling system pressure test would probably be the next test. If the pressure increases when the engine is running then it is likely to be a head gasket or similar problem. If no pressure increase is noted, then move on to the next test and so on. After each test go back to stage 3 and evaluate what you know, not what you don't know.

- Stage 5 Let's assume the problem was a thermostat stuck closed – replace it and top up the coolant, etc.
- Stage 6 Check that the system is now working. Also check that you have not caused any further problems such as leaks or loose wires.

Summary This example is simplified a little, but like the hose pipe problem it is the sequence that matters, particularly the 'stop and think' at stage 3. It is often possible to go directly to the cause of the fault at this stage, providing that you have an adequate knowledge of how the system works.

Concern, cause, correction 1 The 3 C's, as concern, cause, correction are sometimes described, is another reminder that following a process for automotive repairs and diagnostics is essential. It is in a way a simplified version of our six-stage process as shown in this table.

Repair and diagnostic processes

Six-stage process	CCC
Verify	Concern
Collect	Cause
Evaluate	
Test	
Rectify	Correction
Check	

Concern, cause, correction 2 This table is a further example where extra suggestions have been added as a reminder of how important it is to collect further information. It is also recommended that this information and process is included on the jobsheet so the customer is kept informed. Most customer complaints come about because of poor work or poor communication – this may be acceptable in some poor quality establishments but not in any that you and I are involved in – be professional and you will be treated like one (lecture over, sorry).

Process outline	Example situation	Notes
Customer Concern:	Battery seems to be discharged and will sometimes not start the car. It seems to be worse when the headlights are used	This should set you thinking that the cause is probably a faulty battery, a charging system fault, a parasitic discharge or a starter motor problem (the symptoms would suggest a charging fault is most likely but keep an open mind)
Vehicle service history information:	Car is five years old, has done 95,000 miles but has a good service history. A new battery was fitted one year ago and the cam belt was replaced two years ago	Battery probably ok and drive belt adjustment likely to be correct (still suspicious of a charging fault)
Related technical service bulletins:	New camshaft drive belt should be fitted every 50,000 miles	Not connected but it would be good to recommend that the belt was changed at this time
Diagnostic procedures performed:	Battery voltage and discharge test – ok Drive belt tension – ok (but a bit worn) Alternator charging voltage –	14V is the expected charging voltage on most systems

	13V Checked charging circuit for volt drop - ok	
Cause:	Alternator not producing correct voltage	An auto-electrician may be able to repair the alternator but for warranty reasons a new or reconditioned one is often best (particularly at this mileage)
Correction:	Reconditioned alternator and new drive belt fitted and checked – charging now ok at 14V	Note how by thinking about this process we had almost diagnosed the problem before doing any tests, also note that following this process will make us confident that we have carried out the correct repair, first time. The customer will appreciate this – and will come back again

Summary So, while the concern, cause, correction sequence is quite simple, it is very effective as a means of communication as well as a diagnosis and repair process. An example jobcard/jobsheet is available for download from www.automotive-technology.co.uk that includes the three C's. It is ideal as a training aid as well as for real use.

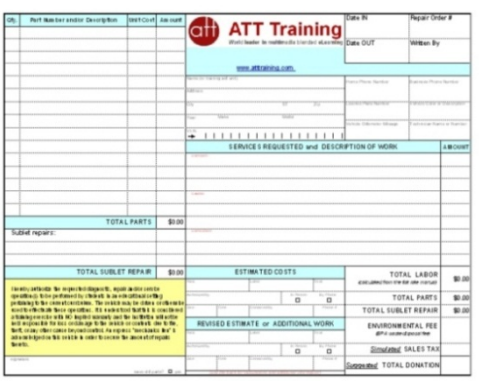

Job Card/Repair Order

Root cause analysis 1 The phrase 'root cause analysis' (RCA) is used to describe a range of problem solving methods aimed at identifying the root causes of problems or events. I have included this short section because it helps to reinforce the importance of keeping an open mind when diagnosing faults, and again, stresses the need to work in a logical and structured way. The root cause of a problem is not always obvious; the example on the following screen will help to illustrate this.

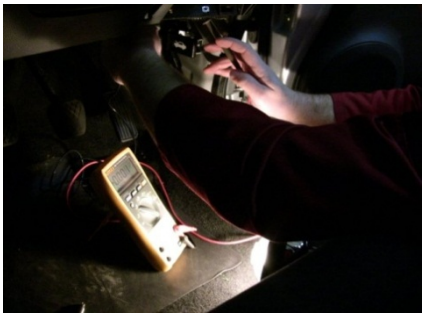

Electrical testing

Root cause analysis 2 Let's assume the symptom was that one rear light on a car did not work. Using the six-stage process, a connector block was replaced as it had an open circuit fault. The light now works ok but what was missed was that a small leak from the rear screen washer pipe dripped on the connector when the washer was operated. This was the root cause.

Root cause analysis 3 The practice of RCA is based, quite rightly, on the belief that problems are best solved by attempting to address, correct or eliminate the root causes, as opposed to just addressing the faults causing observable symptoms. By dealing with root causes, it is more likely that problems will not reoccur. RCA is best considered to be an iterative process because complete prevention of recurrence by one corrective action is not always realistic.

Root causes of a problem can be in many different parts of a process. This is sometimes represented by a 'fishbone' diagram. Two examples are presented on this screen and the next screen. These shows how any one cause on any one branch (or rib) can result in a problem at the end of a more complex process.

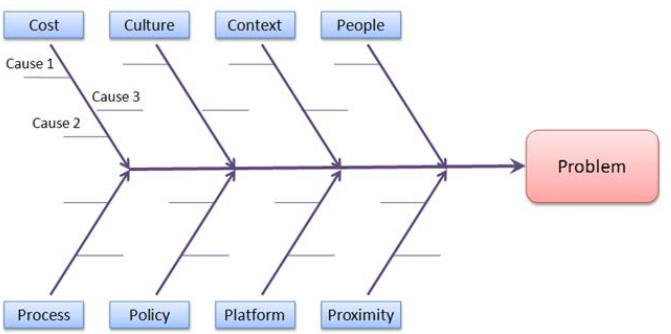

Fishbone diagram showing possible root causes of a problem in software development

Root cause analysis 4 RCA is usually used as a reactive method of identifying causes, revealing problems and solving them and it is done after an event has occurred. However, RCA can be a useful pro-active technique because, in some situations, it can be used to forecast or predict probable events.

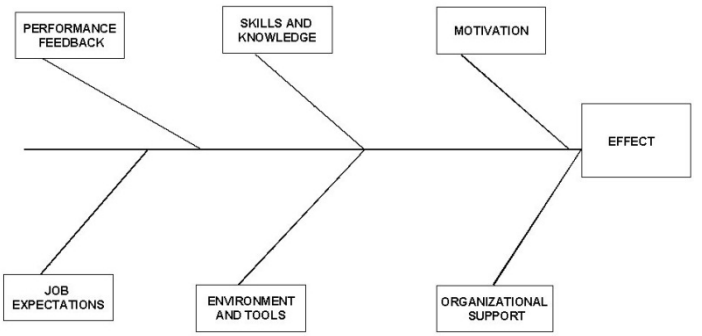

Fishbone diagram that could be used to look at diagnostic processes

Root cause analysis 5 Root cause analysis is not a single defined methodology. There are a number of different ways of doing the analysis. However, several very-broadly defined methods can be identified:

- Safety-based RCA descends from the fields of accident analysis and occupational safety and health
- Production-based RCA has its origins in the field of quality control for industrial manufacturing
- Process-based RCA is similar to production-based RCA, but has been expanded to include business processes
- Failure-based RCA comes from the practice of failure analysis used in engineering and maintenance.

Root cause analysis 6 The list shown here is a much simplified representation of a failure-based RCA process. Note that the key steps are numbers 3 and 4. This is because they direct the corrective action at the true root cause of the problem.

1. Define the problem
2. Gather data and evidence
3. Identify the causes and root causes
4. Identify corrective action(s)
5. Implement the root cause correction(s)
6. Ensure effectiveness.

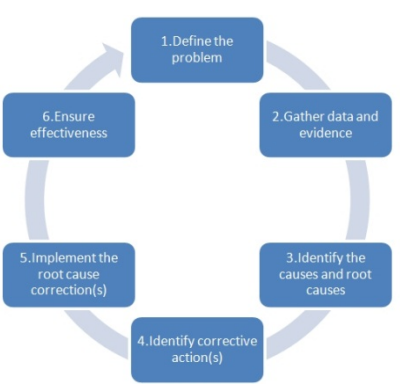

RCA process

As an observant reader, you will also note that these steps are very similar to our six-stage faultfinding process.

Summary I have introduced the six-stage process of diagnostics, not so that it should always be used as a checklist but to illustrate how important it is to follow a process. Much more detail will be given later, in particular about stages 3 and 4. The purpose of this set process is to ensure that 'we' work in a set, logical way.

'Logic is the beginning of wisdom not the end.' (Spock to Valeris, Star Trek II)

Look back over the previous section and write out a list of the key bullet points here:

Data sources

Introduction 1 Data is available from a number of sources; clearly the best being direct from the manufacturer. However, for most 'general' repair workshops other sources have to be found. Most sources are now either online or supplied on CD or DVD. However, some useful 'data books' are still available.

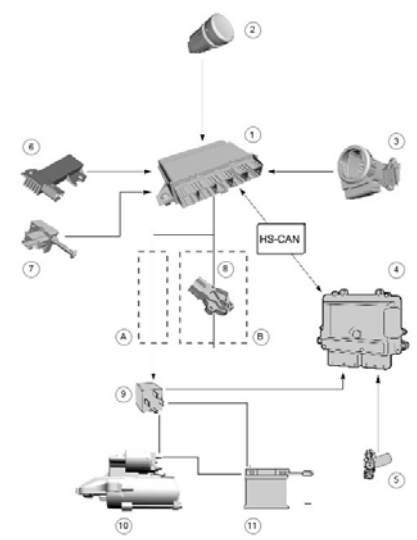

Example of a manufacturer's data (Ford): Keyless starting system 1-Keylesss vehicle module, 2-Start/stop button, 3-Electronic steering lock, 4-Powertrain control module, 5-Crank sensor, 6-Keyless vehicle antenna, 7-Vehicles with manual transmission: Clutch pedal position switch / vehicles with automatic transmission: Stoplamp switch, 8-The TR sensor, 9-Starter relay, 10-Starter motor, 11-Battery (Source: Ford Motor Company)

Introduction 2 Examples of the type of data necessary for diagnostic and other work are as follows:

- Component specification (resistance, voltage output etc.)
- Diagnostics charts

- Circuit diagrams
- Adjustment data
- Timing belt fitting data
- Component location
- Repair times
- Service schedules

Autodata 1 One of the best known companies for supplying automotive data is Autodata, both in the UK, USA and elsewhere. This information, presented as books, on the web and on CDs, is well known and well respected. Very comprehensive information is available ranging from the standard 'data book' to full vehicle circuit diagrams and engine management (and other systems) diagnostic test routines. The online system is particularly useful. Visit www.autodata.ltd.uk for more information.

Autodata 2 Information about testing procedures is available as shown in these pictures. These sheets include test data as well as test procedures related to specific vehicles or systems.

Bosch ESItronic 1 There are already over 30 million registered cars in the UK and over 240 million in the USA. Of course this includes older vehicles but all of the newer ones (still 10s of millions) have engine management systems. These need quality test equipment to diagnose faults and system failures. Ineffective diagnostic work inevitably leads to vehicle problems, dissatisfied customers and labour costs which far exceed a realistic invoice value for the workshop.

Bosch ESItronic 2 Good data will help reduce errors and increase satisfaction. The Bosch ESItronic system runs from a DVD and as well as information about test procedures and test results, other details such as service data are included. This data system can be used in conjunction with the Bosch KTS diagnostic tool.

ESItronic data (Source: Bosch Media) data3

Summary Both of the previously mention companies as sources of data are excellent – and essential. It is possible to carry out diagnostic work without this, but much more difficult and less reliable. The money for good data will be well spent.

Look back over the previous section and write out a list of the key bullet points here:

Diagnostics on paper

Introduction This section is again a way of changing how you approach problems on a vehicle. The key message is that if you stop and think before 'pulling the vehicle to pieces', it will often save a great deal of time. In other words, some of the diagnostic work can be done 'on paper' before we start on the vehicle. To illustrate this, the next section lists symptoms for three separate faults on a car and for each of these symptoms, three possible faults.

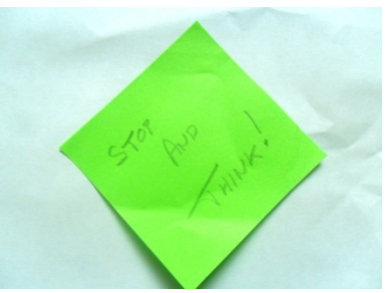

Important Note!

Examples All the faults are possible in the example given here, but in each case see which you think is the 'most likely' option. Roll over the numbers for my answers.

Symptoms	Possible faults
A: The brake/stop lights are reported as not operating. On checking it is confirmed that neither of the two bulbs or the row of high-mounted LEDs are operating as the pedal is pressed. All other systems work correctly	1. Two bulbs and twelve LEDs blown 2. Auxiliary systems relay open circuit 3. Brake light switch not closing
B: An engine fitted with full management system tends to stall when running slowly. It runs well under all other conditions and the reported symptom is found to be intermittent	1. Fuel pump output pressure low 2. Idle control valve sticking 3. Engine speed sensor wire loose
C: The off side dip beam headlight not operating. This is confirmed on examination and also noted is that the off side tail lights does not work	1. Two bulbs blown 2. Main lighting fusible link blown 3. Short circuit between off side tail and dip beam lights

Check the screen for my answers…

Summary The technique suggested here relates to stages 1 to 3 of the 'the six stages of fault diagnosis' process. By applying a little thought before even taking a screwdriver to the car, a lot of time can be saved. If the problems suggested in the previous table were real we would at least now be able to start looking in the right area for the fault.

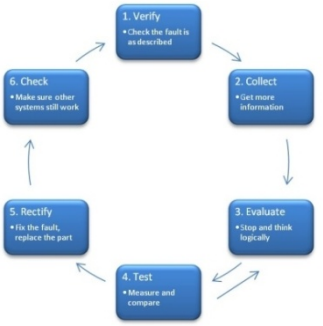

Six stages of diagnostics.

How long is a piece of string? 1 Yes I know, twice the distance from the middle to one end. What I am really getting at here though is the issue about what is a valid reading or measurement and what is not – when compared to data. For example if the 'data source' says the resistance of the component should be between 60 and 90Ω, what do you do when the measured value is 55Ω? If the measured value was 0Ω or 1000Ωthen the answer is easy – the component is faulty. However, when the value is very close you have to make a decision. In this case (55Ω) it is very likely that the component is serviceable.

String Theory…

How long is a piece of string? 2 The decision over this type of issue is difficult and must in many cases be based on experience. As a general guide however, I would suggest that if the reading is in the right 'order of magnitude', then the component has a good chance of being OK. By this I mean that if the value falls within the correct range of 1s, 10s, 100s or 1000s etc. then it is probably good.

Summary Do notice that I have ensured that words or phrases such as 'probably', 'good chance' and 'very likely' have been used here. This is not just to make sure I have a get out clause; it is also to illustrate that diagnostic work can involve 'playing the best odds' – as long as this is within a logical process.

Look back over the previous section and write out a list of the key bullet points here:

Mechanical diagnostic techniques

Check the obvious first Start all hands on diagnostic routines with 'hand and eye checks'. In other words look over the vehicle for obvious faults. For example, if automatic transmission fluid is leaking on to the floor then put this right before carrying out complicated stall tests. Here are some further suggestions that will at some point save you a lot of time.

- If the engine is blowing blue smoke out of the exhaust – consider the worth of tracing the cause of a tapping noise in the engine
- When an engine will not start – check that there is fuel in the tank

Mechanical systems

Noise, vibration and harshness Noise, vibration and harshness (NVH) concerns have become more important as drivers have become more sensitive to these issues. Drivers have higher expectations of comfort levels. Noise, vibration and harshness issues are more noticeable due to reduced engine noise and better insulation in general. The main areas of the vehicle that produce NVH are:

- tyres;
- engine accessories;
- suspension;
- driveline.

It is necessary to isolate the NVH into its specific area(s) to allow more detailed diagnosis. A road test as outlined later is often the best method.

1914 Ford Model T (Source: Ford Media)

Noise, vibration and harshness 2 The five most common sources of non-axle noise are exhaust, tyres, roof racks, trim and mouldings, and transmission. Ensure that none of the following conditions is the cause of the noise before proceeding with a driveline strip down and diagnosis.

1. In certain conditions, the pitch of the exhaust may sound like gear noise or under other conditions like a wheel bearing rumble.
2. Tyres can produce a high pitched tread whine or roar, similar to gear noise. This is particularly the case for non-standard tyres.
3. Trim and mouldings can cause whistling or whining noises.
4. Clunk may occur when the throttle is applied or released due to backlash somewhere in the driveline.
5. Bearing rumble sounds like marbles being tumbled.

Noise conditions Noise is very difficult to describe. However, the following are useful terms and are accompanied by suggestions as to when they are most likely to occur.

- Gear noise is typically a howling or whining due to gear damage or incorrect bearing preload. It can occur at various speeds and driving conditions, or it can be continuous.
- 'Chuckle' is a rattling noise that sounds like a stick held against the spokes of a spinning bicycle wheel. It usually occurs while decelerating.
- Knock is very similar to chuckle though it may be louder and occurs on acceleration or deceleration.

Check and rule out tyres, exhaust and trim items before any disassembly to diagnose and correct gear noise.

New Tyre Being Fitted

Vibration conditions 1 Clicking, popping or grinding noises may be noticeable at low speeds and be caused by the following:

- inner or outer CV joints worn (often due to lack of lubrication so check for split gaiters);

- loose drive shaft;
- another component contacting a drive shaft;
- damaged or incorrectly installed wheel bearing, brake or suspension component.

Vibration conditions 2 The following may cause vibration at normal road speeds:

- out-of-balance wheels;
- out-of-round tyres.

The following may cause shudder or vibration during acceleration:

- damaged power train/drive train mounts;
- excessively worn or damaged out-board or in-board CV joints.

Wheel Balancer

Road test route A vehicle will produce a certain amount of noise. Some noise is acceptable and may be audible at certain speeds or under various driving conditions such as on a new road.

Carry out a thorough visual inspection of the vehicle before carrying out the road test. Keep in mind anything that is unusual. A key point is to not repair or adjust anything until the road test is carried out. Of course this does not apply if the condition could be dangerous or the vehicle will not start.

Establish a route that will be used for all diagnostic road tests. This allows you to get to know what is normal and what is not. The roads selected should have sections that are reasonably smooth, level and free of undulations as well as lesser quality sections needed to diagnose faults that only occur under particular conditions. A road that allows driving over a range of speeds is best. Gravel, dirt or bumpy roads are unsuitable because of the additional noise they produce.

Road test video Road test the vehicle and define the condition by reproducing it several times during the road test. During the road test recreate the following conditions.

1. Normal driving speeds of 20 to 80 km/h (15 to 50 mph) with light acceleration, a moaning noise may be heard and possibly a vibration is felt in the front floor pan. It may get worse at a certain engine speed or load.
2. Acceleration/deceleration with slow acceleration and deceleration, a shake is sometimes noticed through the steering wheel seats, front floor pan, front door trim panels, etc.
3. High speed a vibration may be felt in the front floor pan or seats with no visible shake, but with an accompanying sound or rumble, buzz, hum, drone or booming noise. Coast with the clutch pedal down

or gear lever in neutral and engine idling. If vibration is still evident, it may be related to wheels, tyres, front brake discs, wheel hubs or wheel bearings.

4. Engine rpm sensitive a vibration may be felt whenever the engine reaches a particular speed. It may disappear in neutral coasts. Operating the engine at the problem speed while the vehicle is stationary can duplicate the vibration. It can be caused by any component, from the accessory drive belt to the clutch or torque converter, which turns at engine speed when the vehicle is stopped.
5. Noise and vibration while turning clicking, popping or grinding noises may be due to the following: damaged CV joint; loose front wheel half shaft joint boot clamps; another component contacting the half shaft; worn, damaged or incorrectly installed wheel bearing; damaged power train/drive train mounts.

After the road test After a road test, it is often useful to do a similar test on a hoist or lift. When carrying out a 'shake and vibration' diagnosis or 'engine accessory vibration' diagnosis on a lift, observe the following precautions:

- If only one drive wheel is allowed to rotate, speed must be limited to 55 km/h (35 mph) indicated on the speedometer. This is because the actual wheel speed will be twice that indicated on the speedometer.
- The suspension should not be allowed to hang free. If a CV joint were run at a high angle, extra vibration as well as damage to the seals and joints could occur.

Summary A test on the lift may produce different vibrations and noises than a road test because of the effect of the lift. It is not unusual to find a vibration on the lift that was not noticed during the road test. If the condition found on the road can be duplicated on the lift, carrying out experiments on the lift may save a great deal of time.

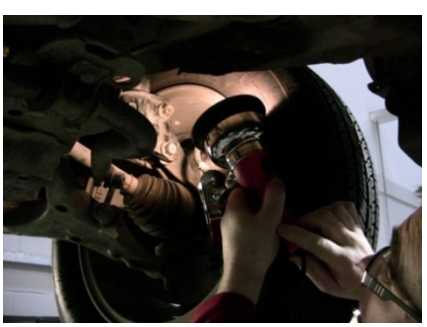

Checking suspension

Engine noises How do you tell a constant tapping from a rattle? Worse still, how do you describe a noise in a book? I'll do my best. Try this table as a non-definitive guide to the source or cause of engine or engine ancillary noises:

Noise description	Possible source
Tap	Valve clearances out of adjustment, cam followers or cam lobes worn
Rattle	A loose component, broken piston ring or component
Light knock	Small end bearings worn, cam or cam follower
Deep knock or thud	Big end bearings worn
Rumble	Main bearings worn
Slap	Worn pistons or bores
Vibration	Loose or out of balance components
Clatter	Broken rocker shaft or broken piston rings

Hiss	Leak from inlet or exhaust manifolds or connections
Roar	Air intake noise, air filter missing, exhaust blowing or a seized viscous fan drive
Clunk	Loose flywheel, worm thrust bearings or a loose front pulley/damper
Whine	Power steering pump or alternator bearing
Shriek	Dry bearing in an ancillary component
Squeal	Slipping drive belt

Sources of engine noise The table shown here is a further guide to engine noise. Possible causes are listed together with the necessary repair or further diagnosis action as appropriate.

Sources of engine noise	Possible cause	Required action
Misfiring/backfiring	Fuel in tank has wrong octane/cetane number, or is wrong type of fuel Ignition system faulty Engine temperature too high Carbon deposits in the combustion chamber start to glow and cause misfiring Timing incorrect, which causes misfiring in the intake/exhaust system.	Determine which type of fuel was last put in the tank Check the ignition system Check the engine cooling system Remove the carbon deposits by using fuel additives and driving the vehicle carefully Check the timing.
Valve train faulty	Valve clearance too large due to faulty bucket tappets or incorrect adjustment of valve clearance. Valve timing incorrectly adjusted valves and pistons are touching Timing belt broken or damaged	Adjust valve clearance if possible and renew faulty bucket tappets – check cam condition Check the valve timing and adjust if necessary Check timing belt and check pistons and valves for damage - renew any faulty parts
Engine components faulty	Pistons Piston rings Cylinder head gasket Big-end and/or main bearing journals.	Disassemble the engine and check components.
Ancillary components	Engine components or ancillary components loose or broken	Check that all components are secure, tighten/adjust as required. Renew if broken

Look back over the previous section and write out a list of the key bullet points here:

Electrical diagnostic techniques

Check the obvious first. Start all hands on diagnostic routines with 'hand and eye checks'. In other words look over the vehicle for obvious faults. For example, if the battery terminals are loose or corroded then put this right before carrying out complicated voltage readings. Here are some further suggestions that will at some point save you a lot of time.

- A misfire may be caused by a loose plug lead – it is easier to look for this than interpret the ignition waveforms on a scope.
- If the ABS warning light stays on – look to see if the wheel speed sensor(s) are covered in mud or oil.

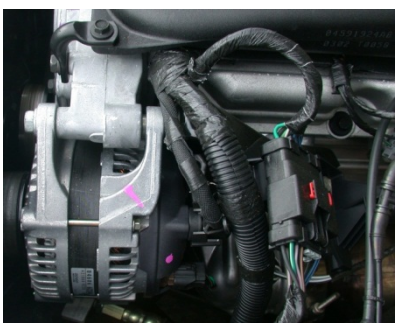

Electrical system

Test lights and analogue meters – Warning A test lamp is ideal for tracing faults in say a lighting circuit because it will cause a current to flow, which tests out high resistance connections. However, it is this same property that will damage delicate electronic circuits – so don't use it for any circuit that contains an ECU.

Even an analogue voltmeter can cause enough current to flow to at best give you a false reading and at worst damage an ECU – so don't use it. A digital multimeter is ideal for all forms of testing, most have an internal resistance in excess of 10MΩ, which means that the current they draw is almost insignificant. An LED test lamp or a logic probe is also acceptable.

Test lamp in use

Generic electrical testing procedure The following procedure is very generic but with little adaptation can be applied to any electrical system. Refer to manufacturer's recommendations if in any doubt. The process of checking any system circuit is represented by this flow chart.

Volt drop testing Volt drop is a term used to describe the difference between two points in a circuit. In this way we can talk about a voltage drop across a battery (normally about 12.6V) or the voltage drop across a closed switch (ideally 0V but may be 0.1 or 0.2V).

The first secret to volt drop testing is to remember that he sum of all volt drops around a circuit always add up to the supply. The second secret is to ensure the circuit is switched on and operating – or at least the circuit should be 'trying to operate'.

In this picture this means that, if the circuit is operating correctly, V1 + V2 + V3 = Vs. When electrical testing therefore, and if the battery voltage is measured at say 12V, a reading of less than 12V at V2 would indicate a volt drop between the terminals of V1 and/or V3. Likewise the correct operation of the switch, that is, it closes and makes a good connection, would be confirmed by a very low reading on V1.

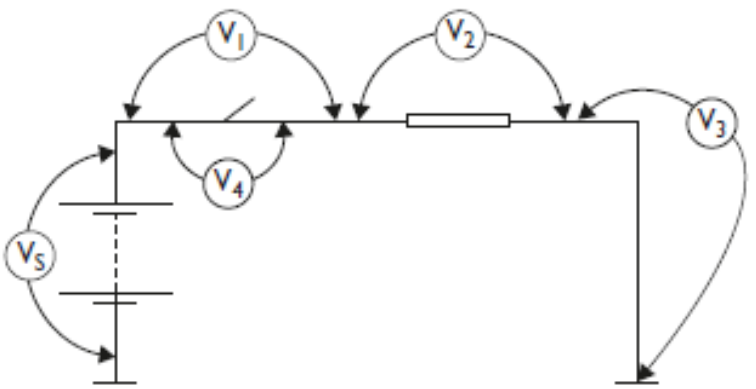

Volt drop testing

Bad Earth or bad ground What is often described as a 'bad earth' (when what is meant is a high resistance to earth), could equally be determined by the reading on V3. To further narrow the cause of a volt drop down, simply measure across a smaller area. The voltmeter V4 for example, would only assess the condition of the switch contacts.

Headlight Connections

Testing for short circuits to earth This fault will normally blow a fuse – or burn out the wiring completely. To trace a short circuit is very different to looking for a high resistance connection or an open circuit. The volt drop testing above will trace an open circuit or a high resistance connection.

My preferred method of tracing a short, after looking for the obvious signs of trapped wires, is to connect a bulb or test lamp across the blown fuse and switch on the circuit. The bulb will light because on one side it is connected to the supply for the fuse and on the other side it is connected to earth via the short circuit fault.

Now disconnect small sections of the circuit one at a time until the test lamp goes out. This will indicate the particular circuit section that has shorted out.

Short circuit testing

On and off load tests On load means that a circuit is drawing a current; off load means it is not. One example where this may be an issue is when testing a starter circuit. Battery voltage may be 12V (well 12.6V) off load, but may be as low as 9V when on load (cranking a cold engine perhaps).

A second example is the supply voltage to the positive terminal of an ignition coil via a high resistance connection (corroded switch terminal for example). With the ignition on and the vehicle not running, the reading will almost certainly be battery voltage because the ignition ECU switches off the primary circuit and no volt drop will show up. However, if the circuit were switched on (with a fused jumper lead if necessary) a lower reading would result showing up the fault.

Black box technique The technique outlined here is known as 'black box faultfinding'. This is an excellent technique and can be applied to many vehicle systems from engine management and ABS to cruise control and instrumentation.

As most systems now revolve around an ECU, the ECU is considered to be a 'black box', in other words we know what it should do but the exact details of how it does it are less important.

This picture shows a block diagram that could be used to represent any number of automobile electrical or electronic systems. In reality the arrows from the 'inputs' to the ECU and from the ECU to the 'outputs' are wires. Treating the ECU as a 'black box' allows us to ignore its complexity. The theory is that if all the sensors and associated wiring to the 'black box' are OK, all the output actuators and their wiring are OK and the supply/earth (ground) connections are OK, then the fault must be the 'black box'. Most ECUs are very reliable however and it is far more likely that the fault will be found in the inputs or outputs.

Sensors and Actuators Normal faultfinding or testing techniques can be applied to the sensors and actuators. For example, if an ABS system uses four inductive type wheel speed sensors, then an easy test is to measure their resistance. Even if the correct value were not known, it would be very unlikely for all four to be wrong at the same time so a comparison can be made. If the same resistance reading is obtained on the end of the sensor wires at the ECU then almost all of the 'inputs' have been tested with just a few ohmmeter readings.

Wheel speed sensors (Source: Bosch Media)

Problems! The same technique will often work with 'outputs'. If the resistance of all the operating windings in say a hydraulic modulator were the same, then it would be reasonable to assume the figure was correct. Sometimes however, it is almost an advantage not to know the manufacturers recommended readings. If the 'book' says the value should be between 800 and 900Ω, what do you do when your ohmmeter reads 905Ω? Answers on a postcard please…

Finally, don't forget that no matter how complex the electronics in an ECU, they will not work without a good power supply and an earth.

Hydraulic Modulator (Source: Bosch Media)

Sensor to ECU method This technique is simple but very useful. The picture here shows a resistance test being carried out on a component. Ω1 is a direct measure of its resistance whereas Ω2 includes the condition of the circuit. If the second reading is the same as the first then the circuit must be in good order.

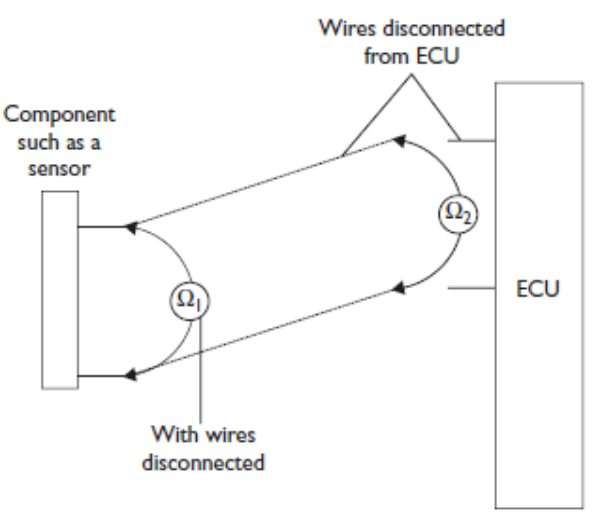

Ohmmeter testing

Warning: The circuit supply must always be off when carrying out ohmmeter tests.

Flight recorder tests 1 It is said that the best place to sit in an aeroplane is on the black box flight recorder. Personally, I would prefer to be in 'first class'! Also, apart from the black box usually being painted bright orange so it can be found after a crash – my reason for mentioning it is to consider how the flight recorder principle can be applied to automotive diagnostics.

Most digital oscilloscopes have flight record facilities. This means that they will save the signal from any probe connection in memory for later play back. The time duration will vary depending on the available memory and the sample speed but this is a very useful feature.

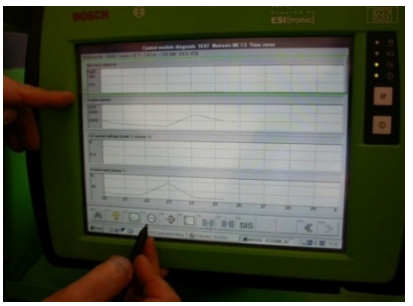

Recorded Data

Flight Recorder Tests 2 As an example, consider an engine with an intermittent misfire that only occurs under load. If a connection is made to the suspected component (coil HT output for example), and the vehicle road tested, the waveforms produced can be examined afterwards.

Many engine (and other system), ECUs have built in flight recorders in the form of self-diagnostic circuits. If a wire breaks loose causing a misfire but then reconnects the faulty circuit will be 'remembered' by the ECU.

Faultfinding by luck – Or is it logic? Actually, what this section considers is the benefit of playing the odds which, while sometimes you get lucky, is still a logical process.

If four electric windows stopped working at the same time, it would be very unlikely that all four motors had burned out. On the other hand if just one electric window stopped working, then it may be reasonable to suspect the motor. It is this type of reasoning that is necessary when faultfinding. However, be warned it is theoretically possible for four motors to apparently burn out all at the same time.

Electric window switches

Playing the odds 1 Using this 'playing the odds' technique can save time when tracing a fault in a vehicle system. For example, if both stop lights do not work and everything else on the vehicle was OK, I would suspect the switch (stages 1 to 3 of the six-stage process). At this stage though, the fault could be anywhere - even two or three blown bulbs. None-the-less a quick test at the switch with a voltmeter would prove the point. Now, let's assume the switch is OK and it produces an output when the brake pedal is pushed down. Testing the length of wire from the front to the back of the vehicle further illustrates how 'luck' comes into play.

Playing the odds 2 This picture represents the main supply wire from the brake switch to the point where the wire 'divides' to each individual stop light (the odds say the fault must be in this wire). For the purpose of this

illustration we will assume the open circuit is just before point 'I'. The procedure continues in one of the two following ways:

One

- Guess that the fault is in the first half and test at point F.
- We were wrong. Guess that the fault is in the first half of the second half and test at point I.
- We were right. Check at H and we have the fault . . . On test number THREE

Two

- Test from A to K in a logical sequence of tests.
- We would find the fault . . . On test number NINE

You may choose which method you prefer.

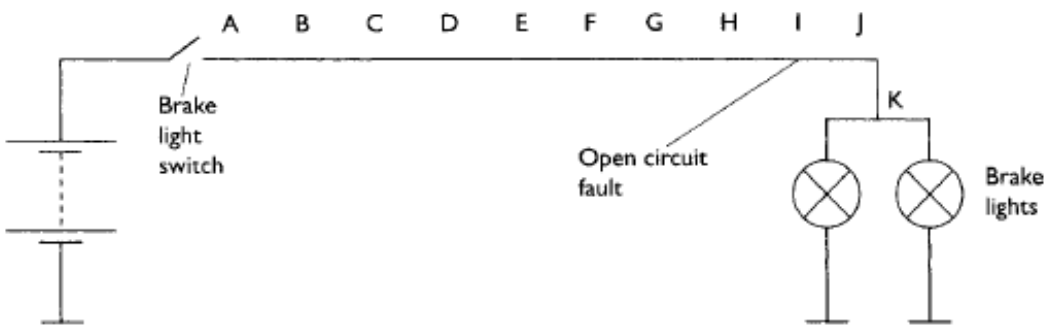

Faultfinding by playing the odds - sometimes you get lucky

Colour codes and terminal numbers 1 It is useful to become familiar with a few key wire colours and terminal numbers when diagnosing electrical faults. As seems to be the case for any standardisation a number of colour code systems are in operation.

A system used by a number of manufacturers is based broadly on the information in given table. After some practice with the use of colour codes the job of the technician is made a lot easier when fault finding an electrical circuit.

Colour	Symbol	Destination/Use
Red	Rt	Main battery feed
White/Black	Ws/Sw	Headlight switch to dip switch
White	Ws	Headlight main beam
Yellow	Ge	Headlight dip beam
Grey	Gr	Side light main feed
Grey/Black	Gr/Sw	Left hand side lights
Grey/Red	Gr/Rt	Right hand side lights
Black/Yellow	Sw/Ge	Fuel injection
Black/Green	Sw/Gn	Ignition controlled supply
Black/White/Green	Sw/Ws/Gn	Indicator switch
Black/White	Sw/Ws	Left side indicators
Black/Green	Sw/Gn	Right side indicators

Light Green	LGn	Coil negative
Brown	Br	Earth
Brown/White	Br/Ws	Earth connections
Pink/White	KW	Ballast resistor wire
Black	Sw	Reverse
Black/Red	Sw/Rt	Stop lights
Green/Black	Gn/Sw	Rear Fog light

Colour codes and terminals 2 A system now in use almost universally is the terminal designation system in accordance with DIN 72 552. This system is to enable easy and correct connections to be made on the vehicle, particularly in after sales repairs. Note that the designations are not to identify individual wires but are to define the terminals of a device. Listed here are some of the most popular numbers.

1	Ignition coil negative
4	Ignition coil high tension
15	Switched positive (ignition switch output)
30	Input from battery positive
31	Earth connection
49	Input to flasher unit
49a	Output from flasher unit
50	Starter control (solenoid terminal)
53	Wiper motor input
54	Stop lamps
55	Fog lamps
56	Headlamps
56a	Main beam
56b	Dip beam
58L	Left side lights
58R	Right side lights
61	Charge warning light
85	Relay winding out
86	Relay winding input
87	Relay contact input (change over relay)
87a	Relay contact output (break)
87b	Relay contact output (make)
L	Left side indicators
R	Right side indicators
C	Indicator warning light (vehicle)

Colour codes and terminals 3 Ford motor company, and many others, now uses a circuit numbering and wire identification system. This is in use worldwide and is known as Function, System-Connection (FSC). The system was developed to assist in vehicle development and production processes. However, it is also very useful to help the technician with faultfinding. Many of the function codes are based on the DIN system. Note that earth wires are now black. The system works as shown here and tables of codes are shown on the following screens:

31S-AC3A || 1.5 BK/RD

Function:

31 = ground/earth

S = additionally switched circuit

System:

AC = headlamp levelling

Connection:

3 = switch connection

A = branch

Size:

1.5 = 1.5 mm2

Colour:

BK = Black (determined by function 31)

RD = Red stripe

Colour codes

Code	Colour
BK	Black
BN	Brown
BU	Blue
GN	Green
GY	Grey
LG	Light-Green
OG	Orange
PK	Pink
RD	Red
SR	Silver
VT	Violet
WH	White
YE	Yellow

Ford System codes It should be noted that the colour codes and terminal designations given in this section, are for illustration only.

Letter	**Main system**	**Examples**
D	Distribution systems	DE = earth
A	Actuated systems	AK = wiper/washer
B	Basic systems	BA = charging BB = starting
C	Control systems	CE = power steering
G	Gauge systems	GA = level/pressure/temperature
H	Heated systems	HC = heated seats
L	Lighting systems	LE = headlights
M	Miscellaneous systems	MA = air bags
P	Powertrain control systems	PA = engine control
W	Indicator systems (‘indications’ not turn signals)	WC = bulb failure
X	Temporary for future features	XS = could mean too much?

Back probing connectors If you are testing for a supply (for example) at an ECU, then use the probes of your digital meter with care. Connect to the back of the terminals, as this will not damage the connecting surfaces as

long as you do not apply excessive force. Sometimes a pin clamped in the test lead's crocodile/alligator clip is ideal for connecting 'through' the insulation of a wire without having to disconnect it. This picture shows this technique.

Test the voltage by back probing a connector with care

Summary The key to electrical diagnostics, as with all other systems, is to work methodically and logically. And finally, remember to take care making test connections so that you do not cause more faults as you carry out tests!

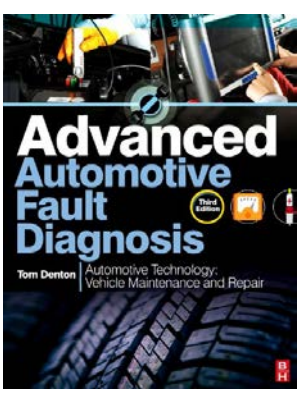

Figure 5 Need more information?

Look back over the previous section and write out a list of the key bullet points here:

Oscilloscope diagnostics

Introduction

Introduction This module outlines the methods used and the results of using an oscilloscope to test a variety of systems. It will be a useful reference as all the waveforms shown are from a correctly operating system. The module is split into three main sections: sensors, actuators and ignition.

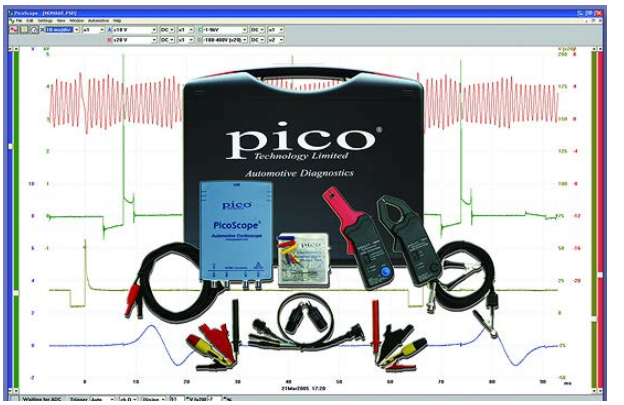

Automotive scope (Source: Pico)

As you work through this subject area, sketch the waveforms in the spaces provided by referring to the computer based material.

Sensors

ABS speed sensor waveform The ABS wheel speed sensors have become increasingly smaller and more efficient in the course of time. Recent models not only measure the speed and direction of wheel rotation but can be integrated into the wheel bearing as well.

ABS wheel speed sensors (Source: Bosch Press)

The Anti-lock Braking System (ABS) relies upon information coming in from the sensors to determine what action should be taken. If, under heavy braking, the ABS electronic control unit (ECU) loses a signal from one of the road wheels, it assumes that the wheel has locked and releases that brake momentarily until it sees the signal return. It is therefore imperative that the sensors are capable of providing a signal to the ABS ECU. If the signal produced from one wheel sensor is at a lower frequency that the others the ECU may also react.

The operation of an ABS sensor is similar that of a crank angle sensor. A small inductive pick-up is affected by the movement of a toothed wheel, which moves in close proximity. The movement of the wheel next to the sensor, results in a 'sine wave'. The sensor, recognizable by its two electrical connections (some may have a coaxial braided outer shield), will produce an output that can be monitored and measured on the oscilloscope.

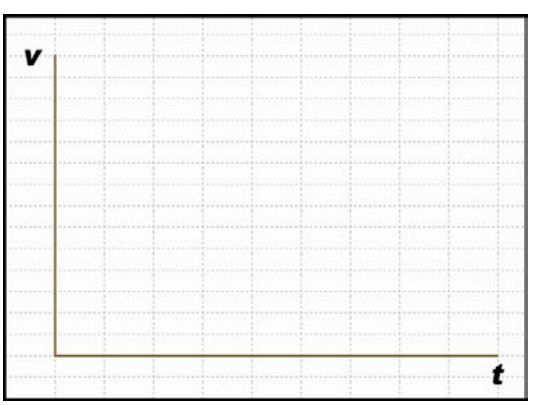

ABS speed sensor waveform

Air flow meter - air vane waveform The vane type air flow meter is a simple potentiometer that produces a voltage output that is proportional to the position of a vane. The vane in turn positions itself in a position proportional to the amount of air flowing.

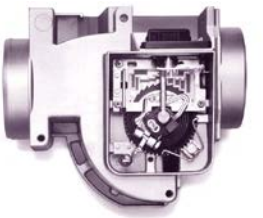

Vane or flap type air flow sensor (Source: Bosch)

The voltage output from the internal track of the air flow meter should be linear to flap movement; this can be measured on an oscilloscope and should look similar to the example shown.

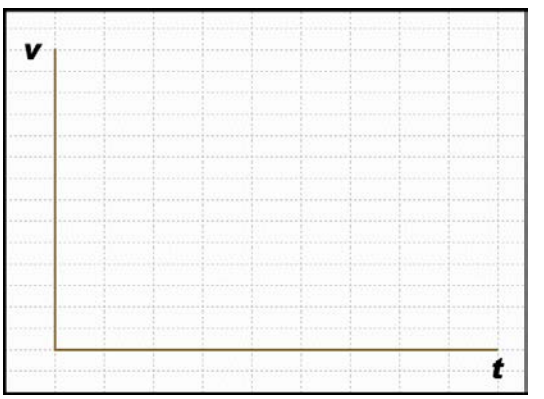

Air vane output voltage waveform

The waveform should show approximately 1.0 volt when the engine is at idle, this voltage will rise as the engine is accelerated and will produce an initial peak. This peak is due to the natural inertia of the air vane and drops momentarily before the voltage is seen to rise again to a peak of approximately 4.0 to 4.5V. This voltage will however depend on how hard the engine is accelerated, so a lower voltage is not necessarily a fault within the air flow meter. On deceleration the voltage will drop sharply as the wiper arm, in contact with the carbon track, returns back to the idle position.

This voltage may in some cases 'dip' below the initial voltage before returning to idle voltage. A gradual drop will be seen on an engine fitted with an idle speed control valve as this will slowly return the engine back to base idle as an anti-stall characteristic.

A time base of approximately 2 seconds plus is used, this enables the movement to be shown on one screen, from idle, through acceleration and back to idle again. The waveform should be clean with no 'drop-out' in the voltage, as this indicates a lack of electrical continuity. This is common on an AFM with a dirty or faulty carbon track. The problem will show as a 'flat spot' or hesitation when the vehicle is driven, this is a typical problem on vehicles with high mileage that have spent the majority of their working life with the throttle in one position.

The 'hash' on the waveform is due to the vacuum change from the induction pulses as the engine is running.

Air flow meter - hot wire waveform The picture shows a micro mechanic mass airflow sensor from Bosch. This type has been in use since 1996. As air flows over the hot wire it cools it down and this produces the output signal. The sensor measures air mass because the air temperature is taken into account due to its cooling effect on the wire.

Hot wire air mass meter (Source: Bosch Press)

The voltage output should be linear to airflow. This can be measured on an oscilloscope and should look similar to the example shown. The waveform should show approximately 1.0 volt when the engine is at idle. This voltage will rise as the engine is accelerated and air volume is increased producing an initial peak. This peak is due to the initial influx of air and drops momentarily before the voltage is seen to rise again to another peak of approximately 4.0 to 4.5V. This voltage will however depend on how hard the engine is accelerated; a lower voltage is not necessarily a fault within the meter.

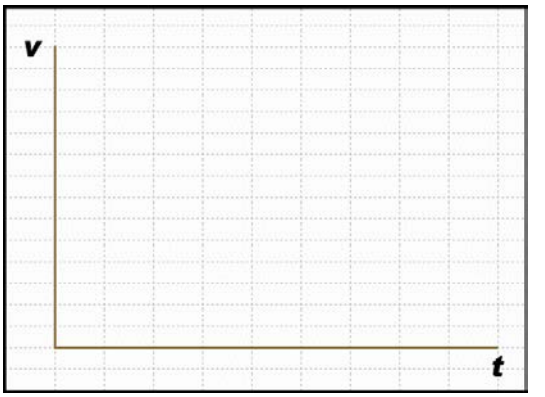

Air mass meter waveform

On deceleration the voltage will drop sharply as the throttle butterfly closes, reducing the airflow, and the engine returns back to idle. The final voltage will drop gradually on an engine fitted with idle speed control valve as this will slowly return the engine back to base idle as an anti-stall characteristic. This function normally only effects the engine speed from around 1200 rev/min back to the idle setting.

A time base of approximately 2 seconds plus is used because this allows the output voltage on one screen, from idle, through acceleration and back to idle again. The 'hash' on the waveform is due to airflow changes caused by the induction pulses as the engine is running.

Inductive crankshaft and camshaft sensor waveform The inductive type crank and cam sensors work in the same way. A single tooth, or toothed wheel, induces a voltage into a winding in the sensor. The cam sensor provides engine position information as well as which cylinder is on which stroke. The crank sensor provides engine speed. It also provides engine position in many cases by use of a ‘missing’ tooth.

Crank sensor in position near the engine flywheel

In this particular waveform we can evaluate the output voltage from the crank sensor. The voltage will differ between manufacturers and it also increases with engine speed. The waveform will be an alternating voltage signal.

The gap in the picture is due to the 'missing tooth' in the flywheel or reluctor and is used as a reference for the ECU to determine the engine's position. Some systems use two reference points per revolution.

The camshaft sensor is sometimes referred to as the cylinder identification (CID) sensor or a 'phase' sensor and is used as a reference to time sequential fuel injection.

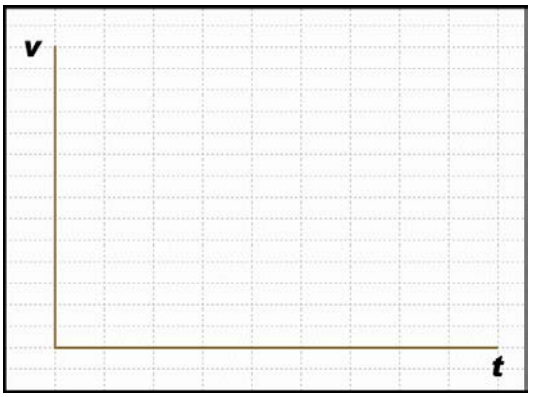

Camshaft sensor output signal waveform

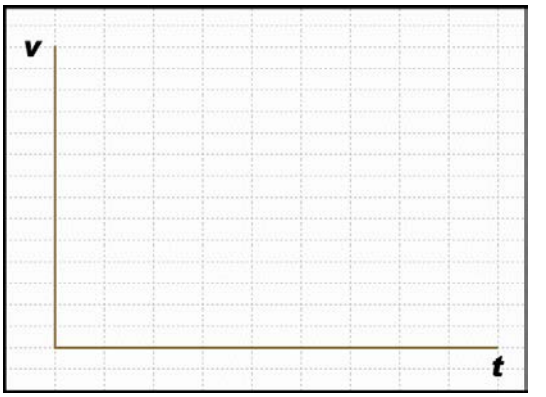

Crankshaft sensor output signal waveform

This particular type of sensor generates its own signal and therefore does not require a voltage supply to power it. It is recognizable by its two electrical connections, with the occasional addition of a coaxial shielding wire.

The voltage produced by the camshaft sensor will be determined by several factors, these being the engine's speed, the proximity of the metal rotor to the pick-up and the strength of the magnetic field offered by the sensor. The ECU needs to see the signal when the engine is started for its reference; if absent it can alter the point at which the fuel is injected. The driver of the vehicle may not be aware that the vehicle has a problem if the CID sensor fails, as the drivability may not be affected. However, the MIL should illuminate.

The characteristics of a good inductive camshaft sensor waveform is a sine wave that increases in magnitude as the engine speed is increased and usually provides one signal per 720° of crankshaft rotation (360° of camshaft rotation). The voltage will be approximately 0.5V peak to peak while the engine is cranking, rising to around 2.5V peak to peak at idle as seen in the example show

Coolant temperature sensor waveform Most coolant temperature sensors are NTC thermistors; their resistance decreases as temperature increases. This can be measured on most systems as a reducing voltage signal.

Temperature sensor

The coolant temperature sensor (CTS) will usually be a two wire device with a voltage supply of approximately 5V.

The resistance change will therefore alter the voltage seen at the sensor and can be monitored for any discrepancies across its operational range. By selecting a time scale of 500 seconds and connecting the oscilloscope to the sensor, the output voltage can be monitored. Start the engine and in the majority of cases the voltage will start in the region of 3 to 4V and fall gradually. The voltage will depend on the temperature of the engine.

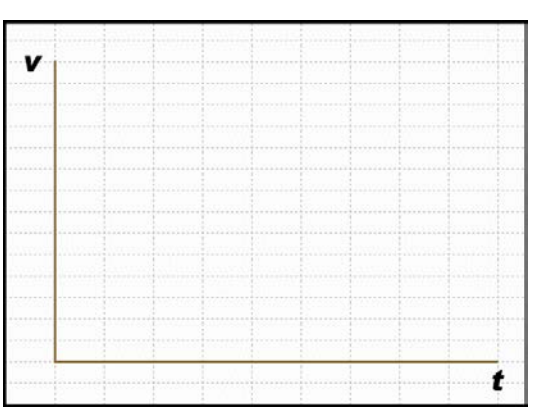

Decreasing voltage waveform

The rate of voltage change is usually linear with no sudden changes to the voltage, if the sensor displays a fault at a certain temperature, it will show up in this test.

Hall effect distributor pick-up waveform Hall sensors are now used in a number of ways. The ignition distributor is very common but they are also used by ABS for monitoring wheel speed and as transmission speed sensors, for example.

This form of trigger device is a simple digital 'on / off switch' which produces a square wave output that is recognized and processed by the ignition control module or engine management ECU.

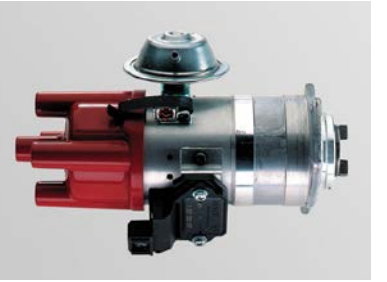

Distributors usually contain a Hall effect or inductive pulse generator (Source: Bosch Press)

The trigger has a rotating metal disc with openings that pass between an electromagnet and the semiconductor (Hall chip). This action produces a square wave that is used by the ECU or amplifier.

The sensor will usually have three connections which are: a stabilized supply voltage, an earth and the output signal. The square wave when monitored on an oscilloscope may vary in amplitude; this is not usually a problem as it is the frequency that is important, not the height of the voltage. However, in most cases the amplitude/voltage will remain constant.

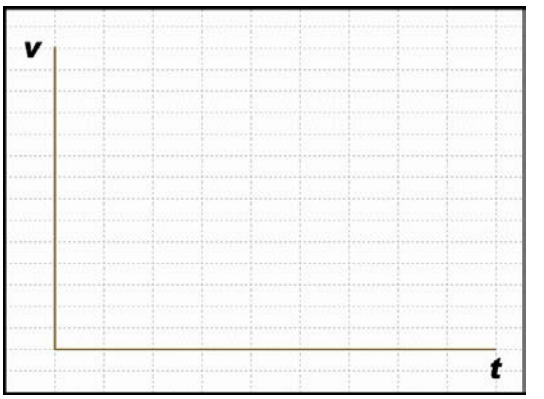

Hall output waveform

Inductive distributor pick-up waveform This particular type of pick-up generates its own signal and therefore does not require a voltage supply to power it. The pick-up is used as a signal to trigger the ignition amplifier or an ECU. The sensor normally has two connections. If a third connection is used it is normally a screen to reduce interference.

As a metal rotor spins, a magnetic field is altered which induces an ac voltage from the pick-up. This type of pick-up could be described as a small alternator because the output voltage rises as the metal rotor approaches the winding, sharply dropping through zero volts as the two components are aligned and producing a voltage in the opposite direction as the rotor passes. The waveform is similar to a sine wave, however, the design of the components are such that a more rapid switching is evident.

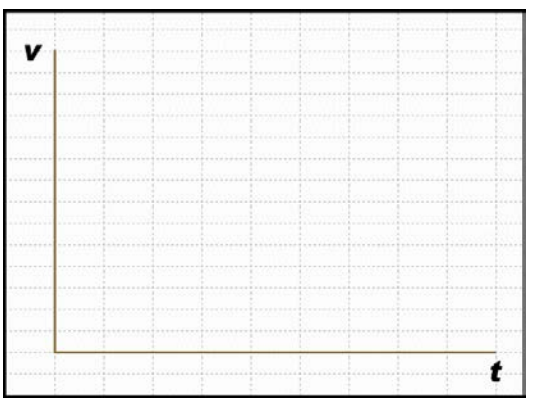

Inductive pick-up output signal waveform

The voltage produced by the pick-up will be determined by three main factors:

Engine speed – the voltage produced will rise from as low as 2 to 3V when cranking, to over 50V, at higher engine speeds

The proximity of the metal rotor to the pick-up winding – an average air gap will be in the order of 0.2 to 0.6mm (8 to 14 thou), a larger air gap will reduce the strength of the magnetic field seen by the winding and the output voltage will be reduced

The strength of the magnetic field offered by the magnet – the strength of this magnetic field determines the effect it has as it 'cuts' through the windings and the output voltage will be reduced accordingly.

A difference between the positive and the negative voltages may also be apparent as the negative side of the sine wave is sometimes attenuated (reduced) when connected to the amplifier circuit, but will produce perfect ac when disconnected and tested under cranking conditions.

Knock sensor waveform The optimal point at which the spark ignites the air/fuel mixture is just before knocking occurs. However, if the timing is set to this value, under certain conditions knock (detonation) will occur. This can cause serious engine damage as well as increasing emissions and reducing efficiency. A knock sensor is used by some engine management systems. The sensor is a small piezo-electrical crystal that, when coupled with the ECU, can identify when knock occurs and retard the ignition timing accordingly.

Knock sensor

The frequency of knocking is approximately 15 kHz. As the response of the sensor is very fast an appropriate time scale must be set, in the case of the example waveform 0 - 500 ms and a 0 - 5 volt scale. The best way to test a knock sensor is to remove the knock sensor from the engine and to tap it with a small wrench; the resultant waveform should be similar to the example shown.

Note: When refitting the sensor tighten to the correct torque setting as over tightening can damage the sensor and/or cause it to produce incorrect signals.

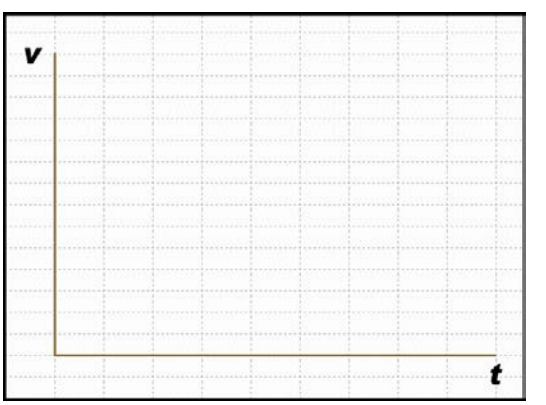

Knock sensor output signal waveform

Oxygen sensor (Titania) waveform The lambda sensor, also referred to as the oxygen sensor, plays a very important role in the control of exhaust emissions on a catalyst equipped vehicle.

The main lambda sensor is fitted into the exhaust pipe before the catalytic converter. The sensor will have four electrical connections. It reacts to the oxygen content in the exhaust system and will produce an oscillating voltage between 0.5 volt (lean) to 4.0V, or above (rich) when running correctly. A second sensor to monitor the catalyst performance may be fitted downstream of the converter.

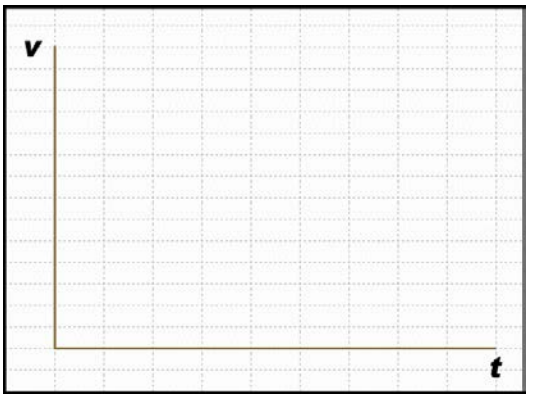

Titania lambda sensor output waveform

Titania sensors, unlike Zirconia sensors, require a voltage supply as they do not generate their own voltage. A vehicle equipped with a lambda sensor is said to have 'closed loop', this means that after the fuel has been burnt during the combustion process, the sensor will analyze the emissions and adjust the engine's fuelling accordingly.

Titania sensors have a heater element to assist the sensor reaching its optimum operating temperature. The sensor when working correctly will switch approximately once per second (1 Hz) but will only start to switch when at normal operating temperature. This switching can be seen on the oscilloscope, and the waveform should look similar to the one in the example.

Titania knock sensor

Oxygen sensor (Zirconia) waveform The lambda sensor is also referred to as the oxygen sensor or a heated exhaust gas oxygen (HEGO) sensor and plays a very important role in control of exhaust emissions on a catalytic equipped vehicle. The lambda sensor is fitted into the exhaust pipe before the catalytic converter. A second sensor to monitor the catalyst performance may be fitted downstream of the converter.

Zirconia type oxygen sensor

The sensor will have varying electrical connections and may have up to four wires; it reacts to the oxygen content in the exhaust system and will produce a small voltage depending on the Air/Fuel mixture seen at the time. The voltage range seen will, in most cases, vary between 0.2 and 0.8V. The 0.2V indicates a lean mixture and a voltage of 0.8v shows a richer mixture.

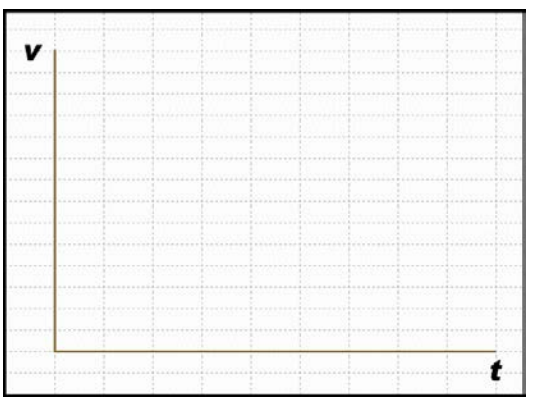

Zirconia oxygen sensor output waveform

A vehicle equipped with a lambda sensor is said to have 'closed loop', this means that after the fuel has been burnt during the combustion process, the sensor will analyze the emissions and adjust the engine's fuelling accordingly.

Lambda sensors can have a heater element to assist the sensor reaching its optimum operating temperature. Zirconia sensors when working correctly will switch approximately once per second (1 Hz) and will only start to switch when at normal operating temperature. This switching can be seen on the oscilloscope, and the waveform should look similar to the one in the example waveform.

Throttle position potentiometer waveform This sensor or potentiometer is able to indicate to the ECU the exact amount of throttle opening due to its linear output.

The majority of modern management systems use this type of sensor. It is located on the throttle butterfly spindle. The ‘throttle pot’ is a three-wire device having a 5 volt supply (usually), an earth connection and a variable output from the centre pin. As the output is critical to the vehicle's performance, any 'blind spots' within the internal carbon track's swept area, will cause 'flat spots' and 'hesitations'. This lack of continuity can be seen on an oscilloscope.

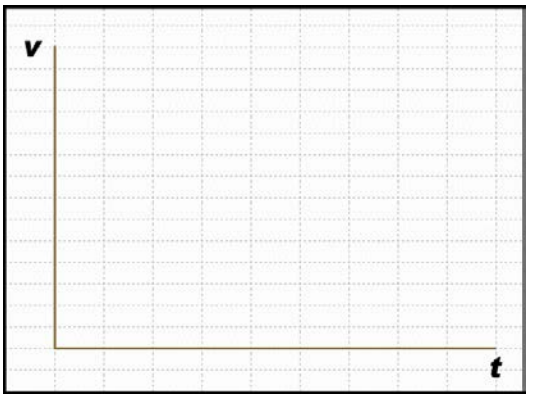

Throttle pot output voltage signal

A good throttle potentiometer should show a small voltage at the throttle closed position, gradually rising in voltage as the throttle is opened and returning back to its initial voltage as the throttle is closed. Although many throttle position sensor voltages will be manufacturer specific, many are non-adjustable and the voltage will be in the region of 0.5 to 1.0V at idle rising to 4.0V (or more) with a fully opened throttle. For the full operational range, a time scale around 2 seconds is used.

Road speed sensor (Hall effect) To measure the output of this sensor, jack up the driven wheels of the vehicle and place on axle stands on firm level ground. Run the engine in gear and then probe each of the three connections (+, - and signal).

As the road speed is increased the frequency of the switching should be seen to increase. This change can also be measured on a multimeter with frequency capabilities. The sensor will be located on either the speedometer drive output from the gearbox or to the rear of the speedometer head if a speedo cable is used. The signal is used by the engine ECU and if appropriate, the transmission ECU.

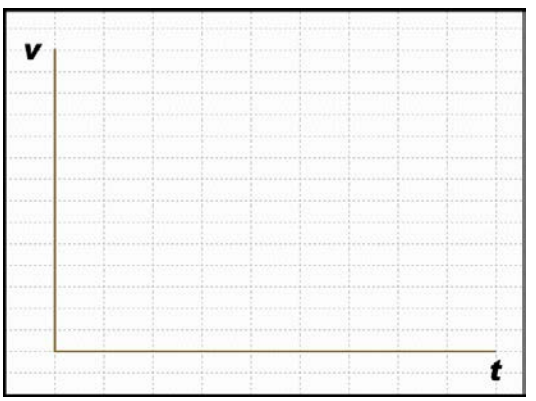

Hall effect road speed sensor waveform

Read the previous section again and note down some key bullet points here:

-
-
-
-
-

Single point injector waveform Single point injection is also sometimes referred to as throttle body injection.

A single injector is used (on larger engines two injectors can be used) in what may have the outward appearance to be a carburetor housing.

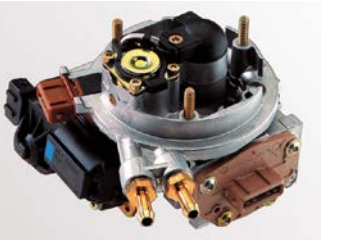

Throttle body with a single injector

The resultant waveform from the single point system shows an initial injection period followed by multi-pulsing of the injector in the remainder of the trace. This 'current limiting' section of the waveform is called the supplementary duration and is the part of the injection trace that expands to increase fuel quantity.

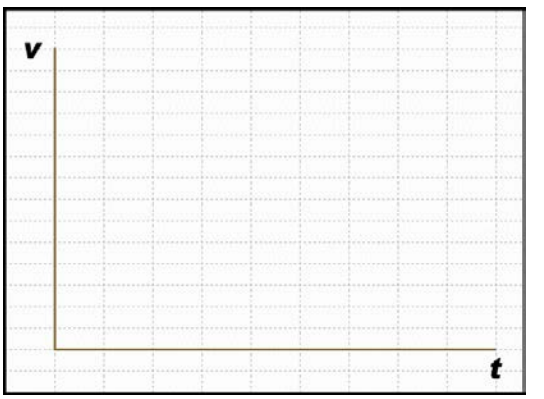

Signal point injector waveform

Multi-point injector waveform The injector is an electromechanical device which is fed by a 12 volt supply. The voltage will only be present when the engine is cranking or running because it is controlled by a relay that operates only when a speed signal is available from the engine. Early systems had this feature built into the relay; most modern systems control the relay from the ECU.

Multipoint injectors on the rail

The length of time the injector is held open will depend on the input signals seen by the ECU from its various engine sensors. The held open time or 'injector duration' will vary to compensate for cold engine starting and warm-up periods. The duration time will also expand under acceleration. The injector will have a constant voltage supply while the engine is running and the earth path will be switched via the ECU, the result can be seen in the example waveform. When the earth is removed a voltage is induced into the injector and a spike approaching 60V is recorded.

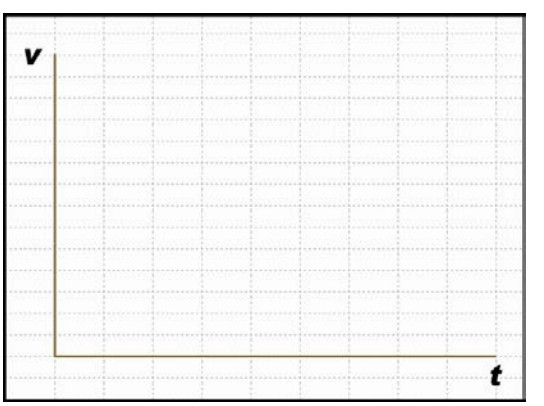

Multipoint injector waveform

The height of the spike will vary from vehicle to vehicle. If the value is approximately 35V, it is because a zener diode is used in the ECU to clamp the voltage. Make sure the top of the spike is squared off, indicating the zener dumped the remainder of the spike. If it is not squared, that indicates the spike is not strong enough to make the zener fully dump, meaning there is a problem with a weak injector winding. If a zener diode is not used in the computer, the spike from a good injector will be 60V or more.

Multi-point injection may be either sequential or simultaneous. A simultaneous system will fire all 4 injectors at the same time with each cylinder receiving two injection pulses per cycle (720° crankshaft rotation). A sequential system will receiving just one injection pulse per cycle, this is timed to coincide with the opening of the inlet valve.

As a very rough guide the injector durations for an engine at normal operating temperature, at idle speed are:

- 2.5 ms - Simultaneous
- 3.5 ms – Sequential

Monitoring the injector waveform using both voltage and amperage, allows display of the 'correct' time that the injector is physically open. The current waveform (the one starting on the zero line) shows that the waveform is 'split' into two defined areas.

The first part of the current waveform is responsible for the electromagnetic force lifting the pintle; in this example the time taken is approximately 1.5 ms; this is often referred to as the solenoid reaction time. The remaining 2 ms is the actual time the injector is fully open. This, when taken as a comparison against the injector voltage duration, is different to the 3.5 ms shown. The secret is to make sure you compare like with like!

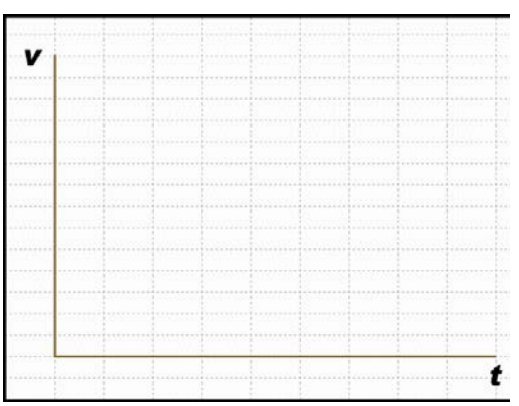

Current waveform

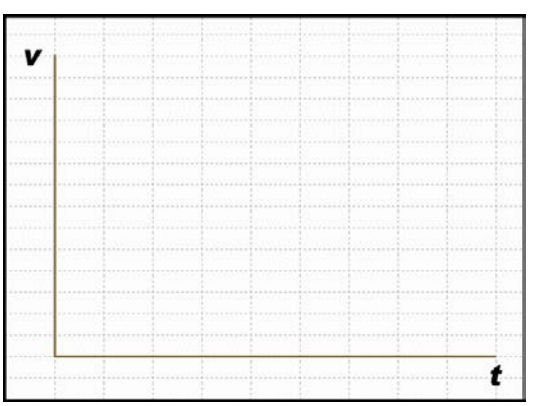

Injector voltage waveform

Bosch common rail diesel injector waveform
Common rail diesel systems are becoming more common!

Common rail diesel pump, rail, injectors and ECU (Source: Bosch Press)

It can be clearly seen from the example waveform that there are two distinctive points of injection, the first being the 'pre injection' phase, with the second pulse being the 'main' injection phase.

As the throttle is opened, and the engine is accelerated, the 'main' injection pulse expands in a similar way to a petrol injector. As the throttle is released, the 'main' injection pulse disappears until such time as the engine returns to just above idle.

Under certain engine conditions a third phase may be seen, this is called the 'post injection' phase and is predominantly concerned with controlling the exhaust emissions.

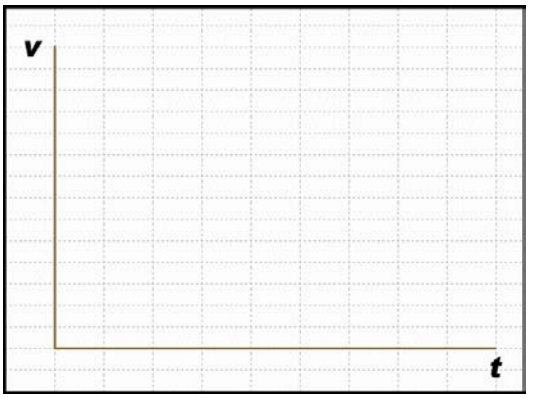

CR injector (current) waveform showing pre and main injection pulses

Electromagnetic idle speed control valve waveform This device contains a winding, plunger and spring. When energized the port opens and when not it closes.

Electromagnetic idle speed control valve

The electromagnetic idle speed control valve (ISCV) will have two electrical connections; usually a voltage supply at battery voltage and a switched earth.

The rate at which the device is switched is determined by the ECU to maintain a prerequisite speed according to its programming. The valve will form an air by-pass around the throttle butterfly. If the engine has an adjustable air by-pass and an ISCV, it may require a specific routine to balance the two air paths. The position of the valve tends to take up an average position determined by the supplied signal.

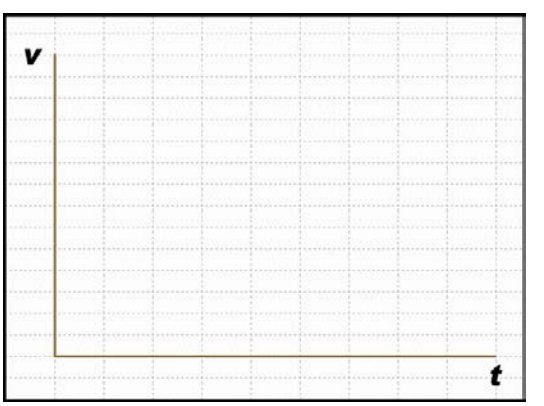

Signal produced by an electromagnetic idle speed control valve

As the example waveform shows, the earth path is switched and the resultant picture is produced. Probing onto the supply side will produce a straight line at system voltage. When the earth circuit is monitored a 'saw tooth' waveform will be seen.

Rotary idle speed control valve waveform The rotary idle speed control valve (ISCV) will have 2 or 3 electrical connections, with a voltage supply at battery voltage and either a single or a double switched earth path. The device is like a motor that only ever rotates about half a turn in each direction!

The rate at which the earth path is switched is determined by the ECU to maintain a prerequisite idle speed according to its programming.

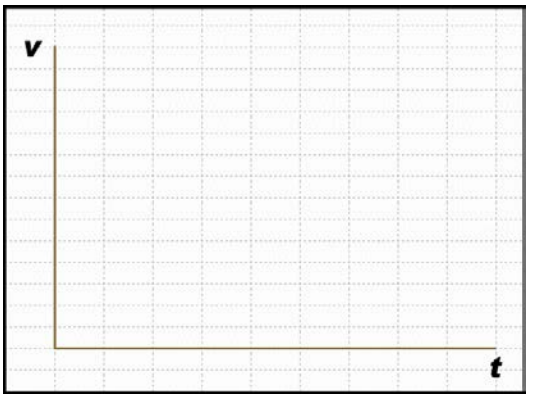

Signal supplied to a rotary idle control valve

The valve will form an air bypass past the throttle butterfly, to form a controlled air bleed within the induction tract. The rotary valve will have the choice of either single or twin earth paths, the single being pulled one way electrically and returned to its closed position via a spring; the double switched earth system will switch the valve in both directions. This can be monitored on a dual trace oscilloscope. As the example waveform shows the earth path is switched and the resultant picture is produced. The idle control device takes up a position determined by the on/off ratio (duty cycle) of the supplied signal.

Probing onto the supply side will produce a straight line at system voltage and when the earth circuit is monitored a square wave will be seen. The frequency can also be measured as can the on/off ratio.

Stepper motor waveform Stepper motors are used to control the idle speed when an idle speed control valve is not employed. The stepper may control an 'air bypass' circuit by having 4 or 5 connections back to the ECU. The earth's enable the control unit to move the motor in a series of 'steps' as the contacts are earthed to ground. These devices may also be used to control the position of control flaps, for example, as part of a heating and ventilation system.

Stepper motor and throttle potentiometer on a throttle body

The individual earth paths can be checked using the oscilloscope. The waveforms should be similar on each path. Variations to the example shown here may be seen between different systems.

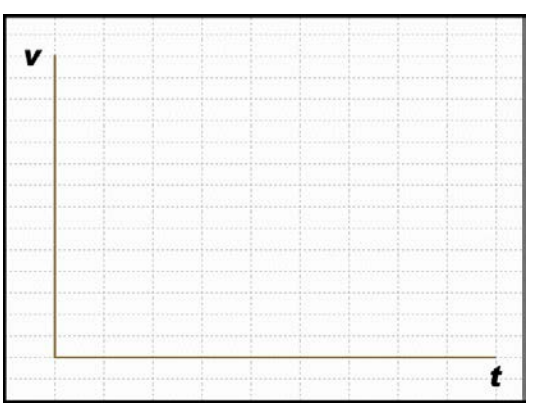

Stepper motor signal waveform

Read the previous section again and note down some key bullet points here:

-
-
-
-

Ignition system

Ignition primary waveform The ignition primary waveform is a measurement of the voltage on the negative side of the ignition coil. The earth path of the coil can produce over 350V. Different types of ignition coils produce slightly different traces but the fundamental parts of the trace and principles are the same.

Direct ignition coils in position

In the waveform shown, the horizontal voltage line at the centre of the oscilloscope is at fairly constant voltage of approximately 40V, which then drops sharply into what is referred to as the coil oscillation. The length of the horizontal voltage line is the 'spark duration' or 'burn time', which in this particular case is about 1ms. The coil oscillation period should display a minimum of 4 to 5 peaks (both upper and lower). A loss of peaks would indicate a coil problem.

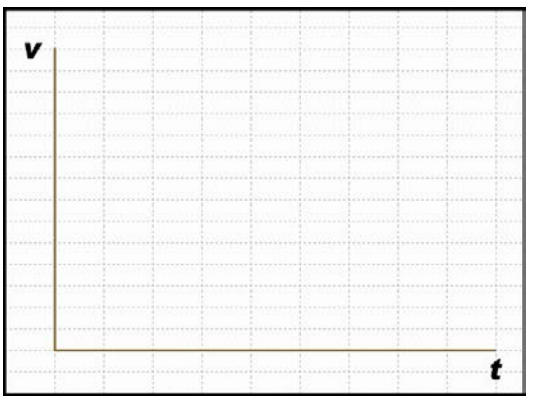

Primary ignition voltage trace waveform

There is no current in the coil's primary circuit until the dwell period. This starts when the coil is earthed and the voltage drops to zero. The dwell period is controlled by the ignition amplifier or ECU and the length of the dwell is determined by the time it takes to build up to about 8A. When this predetermined current has been reached, the amplifier stops increasing the primary current and it is maintained until the earth is removed from the coil. This is the precise moment of ignition.

The vertical line at the centre of the trace is in excess of 200V, this is called the 'induced voltage'. The induced voltage is produced by magnetic inductance. At the point of ignition, the coil's earth circuit is removed and the magnetic flux collapses across the coil's windings. This induces a voltage between 150 and 350V. The coil's high tension output will be proportional to this induced voltage. The height of the induced voltage is sometimes referred to as the primary peak volts.

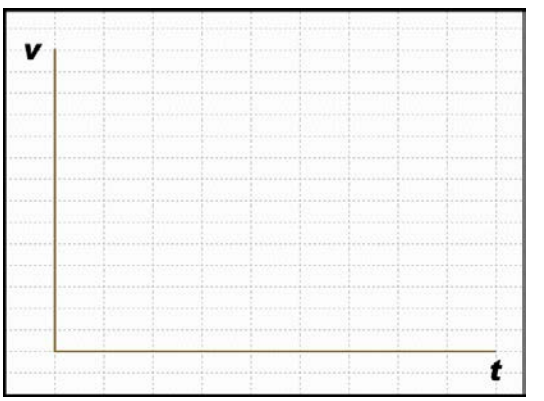

Ignition secondary trace waveform

From the example current waveform, the limiting circuit can be seen in operation. The current switches on as the dwell period starts and rises until the required value is achieved (usually about 8A). At this point the current is maintained until it is released at the point of ignition.

The dwell will expand as the engine revs are increased to maintain a constant coil saturation time. This gives rise to the term 'constant energy'. The coil saturation time can be measured and this will remain the same regardless of engine speed. The example shows a charge time of about 3.5ms.

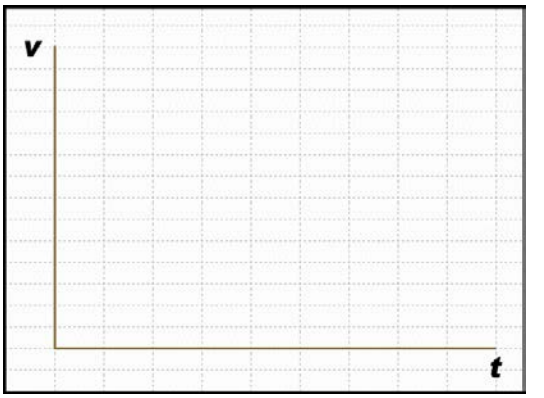

Primary ignition current trace waveform

Ignition secondary waveform The ignition secondary waveform is a measurement of the HT output voltage from the ignition coil. Some coils can produce over 50,000V. Different types of ignition coils produce slightly different traces but the fundamental parts of the trace and principles are the same.

Spark plugs (Source: Bosch Press)

The ignition secondary picture shown in the example waveform is from an engine fitted with electronic ignition. In this case, the waveform has been taken from the main coil lead (king lead). Suitable connection methods mean that similar traces can be seen for other types of ignition system.

The secondary waveform shows the length of time that the HT is flowing across the spark plug electrode after its initial voltage, which is required to initially jump the plug gap. This time is referred to as either the 'burn time' or the 'spark duration'. In the trace shown it can be seen that the horizontal voltage line in the centre of the oscilloscope is at fairly constant voltage of approximately 3 or 4kV, which then drops sharply into the 'coil oscillation' period.

The coil oscillation period should display a minimum of 4 or 5 of peaks (both upper and lower). A loss of peaks indicates that the coil may be faulty. The period between the coil oscillation and the next 'drop down' is when the coil is at rest and there is no voltage in the secondary circuit. The 'drop down' is referred to as the 'polarity peak', and produces a small oscillation in the opposite direction to the plug firing voltage. This is due to the initial switching on of the coil's primary current.

The plug firing voltage is the voltage required to jump and bridge the gap at the plug's electrode, commonly known as the 'plug kV'. In this example the plug firing voltage is about 12 or 13kV.

When the plug kVs are recorded on a DIS or coil per cylinder ignition system, the voltage seen on the waveform should be in the 'upright position'. If the trace is inverted it would suggest that either the wrong polarity has been selected from the menu or in the case of DIS, the inappropriate lead has been chosen. The plug voltage, while the engine is running, is continuously fluctuating and the display will be seen to move up and down. The maximum voltage at the spark plug, can be seen as the 'Ch A: Maximum (kV)' reading at the bottom of the screen.

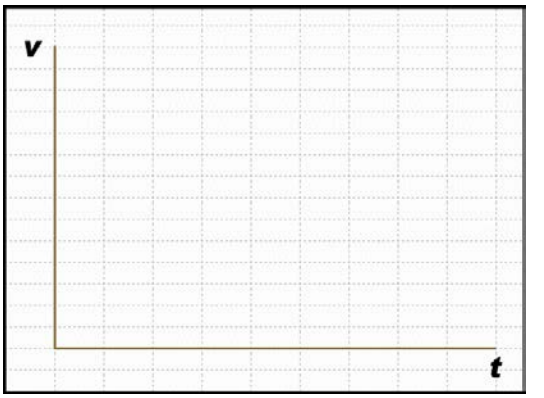

Distributorless ignition

It is a useful test to snap the throttle and observe the voltage requirements when the engine is under load. This is the only time that the plugs are placed under any strain and is a fair assessment of how they will perform on the road.

The second part of the waveform after the vertical line is known as the spark line voltage. This second voltage is the voltage required to keep the plug running after its initial spark to jump the gap. This voltage will be proportional to the resistance within the secondary circuit. The length of the line can be seen to run for approximately 2ms.

Read the previous section again and note down some key bullet points here:

-
-
-
-
-

Other components

Alternator waveform Checking the ripple voltage produced by an alternator is a very good way of assessing its condition.

Alternator

The example waveform illustrates the rectified output from the alternator. The output shown is correct and that there is no fault within the phase windings or the diodes (rectifier pack).

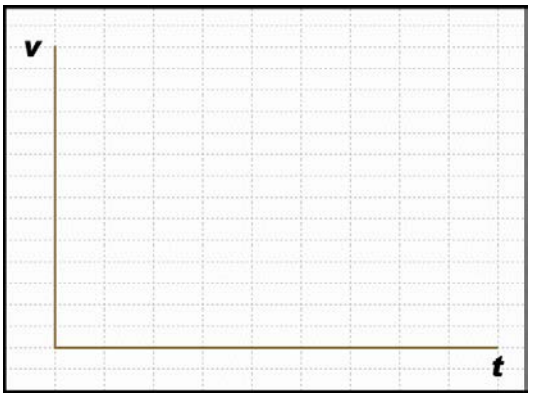

Alternator ripple voltage waveform

The three phases from the alternator have been rectified to dc from its original ac and the waveform shows that the three phases are all functioning.

If the alternator is suffering from a diode fault, long downward 'tails' appear from the trace at regular intervals and 33% of the total current output will be lost. A fault within one of the three phases will show a similar picture to the one illustrated but is three or four times the height, with the base to peak voltage in excess of 1V.

The voltage scale at the side of the oscilloscope is not representative of the charging voltage, but is used to show the upper and lower limits of the ripple. The 'amplitude' (voltage/height) of the waveform will vary under different conditions. A fully charged battery will show a 'flatter' picture, while a discharged battery will show an exaggerated amplitude until the battery is charged. Variations in the average voltage of the waveform are due to the action of the voltage regulator.

Relative compression petrol waveform Measuring the current drawn by the starter motor is useful to determine starter condition but it is also useful as an indicator of engine condition.

The purpose of this particular waveform is therefore to measure the current required to crank the engine and to evaluate the relative compressions. The amperage required to crank the engine depends on many factors, such as: the capacity of the engine, the number of cylinders, the viscosity of the oil, the condition of the starter motor, the condition of the starter's wiring circuit and the compressions in the cylinders. To evaluate the compressions therefore, it is essential that the battery is charged, and the starter and associated circuit are in good condition.

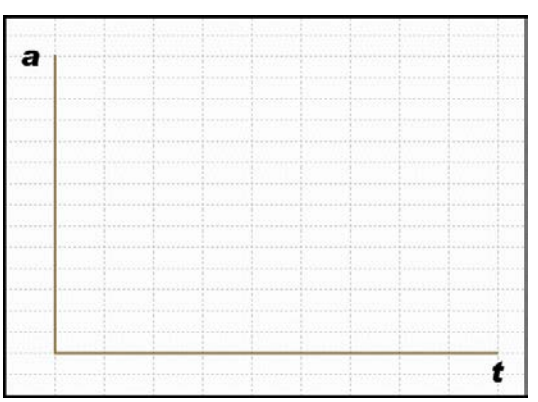

Spark ignition engine cranking amps waveform

The current for a typical 4 cylinder petrol/gasoline engine is in the region of 100 to 200 A.

In the waveform shown, the initial peak of current (approx 400A) is the current required to overcome the initial friction and inertia to rotate the engine. Once the engine is rotating, the current will drop. It is also worth mentioning the small step before the initial peak, which is being caused by the switching of the starter solenoid. The compressions can be compared against each other by monitoring the current required to push each cylinder up on its compression stroke. The better the compression the higher the current demand and vice versa. It is therefore important that the current draw on each cylinder is equal.

CAN-H and CAN-L waveform Controller area network (CAN) is a protocol used to send information around a vehicle on data bus. It is made up of voltage pulses that represent ones and zeros, in other words, binary signals. The data is applied to two wires known as CAN-high and CAN-low.

OBD socket – pin 6 is CAN-high and pin 14 is CAN-low

In this display, it is possible to verify that data is being continuously exchanged along the CAN bus. It is also possible to check that the peak to peak voltage levels are correct and that a signal is present on both CAN lines. CAN uses a differential signal, and the signal on one line should be a coincident mirror image (the signals should line up) of the data on the other line.

The usual reason for examining the CAN signals is where a CAN fault has been indicated by OBD, or to check the CAN connection to a suspected faulty CAN node. The vehicle manufacturers' manual should be referred to for precise waveform parameters.

The signal shown is captured on a fast timebase and allows the individual state changes to be viewed. This enables the mirror image nature of the signals, and the coincidence of the edges to be verified.

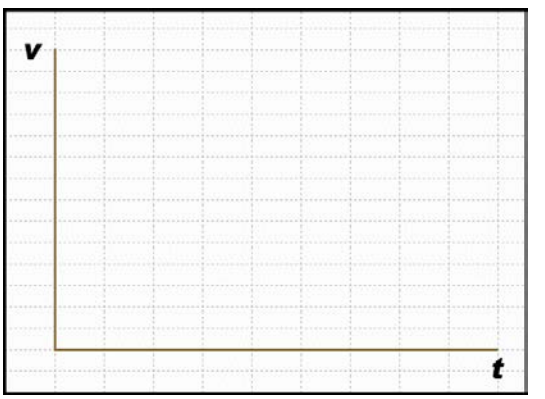

CAN high signal waveform

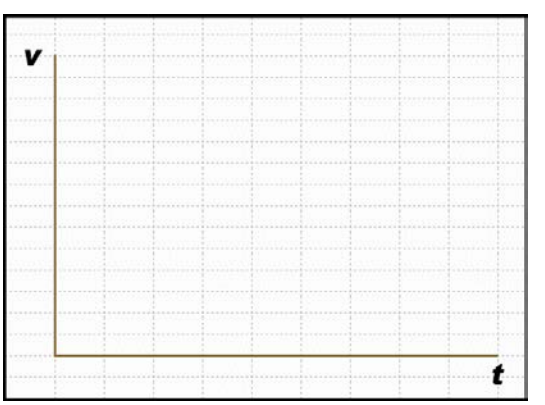

CAN low signal waveform

1. **Worksheet** Carry out oscilloscope tests of vehicle systems

Read the previous section again and note down some key bullet points here:

-
-
-
-

On board diagnostics (OBD)

Introduction

On Board Diagnostics On Board Diagnostics, or OBD, was the name given to the early emission control and engine-management systems introduced in cars. There was no single standard - each manufacturer often used quite different systems. However, OBD systems have been developed and enhanced, in line with United States government requirements, into the current OBD2 standard. The OBD2 requirement applies to all cars sold in the United States from 1996. EOBD is the European equivalent of the American OBD2 standard, which applies to gasoline/petrol cars sold in Europe from 2001 (and diesel cars 3 years later).

Early traffic jam

OBD2 (also OBDII) was developed to address the shortcomings of OBD1 and make the system more user friendly for service and repair technicians. OBD3 is currently under development (2006).

History of the emissions control legislation A key turning point in history, was that in 1966 the California Motor Vehicle Pollution Control Board pioneered the adoption of vehicle tailpipe emissions standards for hydrocarbons (HC) and carbon monoxide (CO). Further, the California Highway Patrol began random roadside inspections of the smog control devices fitted to vehicles.

The following year an Air Resources Act was signed, which effectively allowed the state of California to set its own emissions standards. The California Air Resources Board (CARB) was created in the same year

In 1988 a key announcement saw the beginning of onboard diagnostics. The California Clean Air Act was signed, and CARB adopted regulations that required all 1994 and beyond model year cars be fitted with 'Onboard Diagnostic' systems.

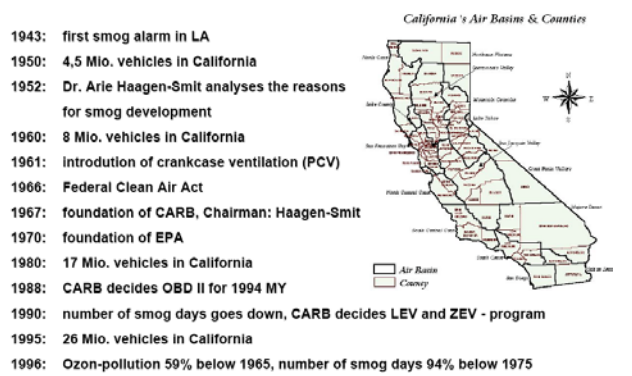

History of CARB Emission legislation activity

Diagnostics CARB promoted the development of technology such that the diagnostic technician would have access to information stored within the engine electronic control unit (ECU). This information, relating to faults that have occurred and that have been logged and stored in the ECU memory, significantly assists in fault diagnosis and rectification. The main reason for this legislation is the requirements to reduce exhaust emissions. The basic objectives of the technology are:

Smog over Los Angeles

To improve emissions compliance by alerting the driver immediately to a fault condition.

To assist repair/diagnostic technicians in identifying system faults and faulty components in the emission control system.

SAE In the late eighties the Society of Automotive Engineers (SAE) defined a list of standard practices, and recommended these to the Environmental Protection Agency (EPA). The EPA acknowledged the benefits of these standards and recommendations, and adopted them. In combination, they changed the shape and application of OBD. The recommendations included having a standard diagnostic connector, a standard scan tool and a communications protocol that the scan tool could use to interface with the vehicle of any manufacturer.

www.sae.org

The standard also included mandatory structures and descriptions for certain emission control system/component defects. These were called 'P0' Codes. Manufacturers were still free to generate their own 'manufacturer specific code descriptions' known as 'P1' Codes. This phase of implementation became known as OBD2, and was adopted for implementation by January 1996.

European onboard diagnostics and global adoption Europe was not immune to the environmental issues associated with smog. A major smog episode occurred in London in December 1952; this lasted for five days and resulted in about 4000 deaths. The UK government passed its first Clean Air Act in 1956, which aimed to control domestic sources of smoke pollution.

Europe

In 1970 the then European Community adopted the directive: 'Measures to be taken against Air Pollution by Emissions from Motor Vehicles'. This set the foundation for future legislation to curb motor vehicle pollution in Europe. The Directive was enhanced over the next three decades when in October 1998 the amendment 'On-Board Diagnostics (OBD) for Motor Vehicles' was adopted. This details the functional aspects of OBD for motor vehicles in Europe and became known as EOBD.

Fault codes An integral feature of the OBD system is its ability to store fault codes relating to problems that occur with the engine electronic control system. In particular ,faults that could affect the emission control system are stored as one of its primary functions. For the diagnostic technician this is a powerful feature, which can clearly assist in locating and rectifying problems on the vehicle.

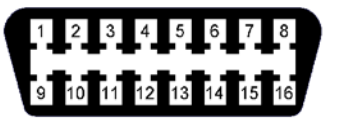

Sixteen Pin DLC OBD2/EOBD connector
Ignition positive supply
Bus + Line, SAE J1850 (PWM)
Manufacturers discretion
Chassis ground
Signal ground
CAN bus H
K Line
Manufacturers discretion
Manufacturers discretion
Bus - Line (PWM)
Manufacturers discretion
Manufacturers discretion
Manufacturers discretion
CAN bus L
L line or second K line
Vehicle battery positive

With the introduction of OBD2 and EOBD this feature was made even more powerful by making it more accessible. Standardization of the interface connector, known as the diagnostic link connector (DLC), and communication protocol, allowed the development of generic scan tools, which could be used on any OBD compliant vehicle.

The diagnostic socket used by systems conforming to EOBD/OBD2 standards has a set pin configuration as shown here.

What exactly is onboard diagnostics? Fundamentally, a microprocessor based onboard diagnostics or OBD system is intended to self diagnose and report when the performance of the vehicle's emissions control systems, or components, have degraded. This is to the extent that the tailpipe emissions have exceeded legislated levels or are likely to be exceeded in the long term.

MIL symbols

When an issue occurs the OBD system illuminates a warning light known as the malfunction indicator lamp (MIL) or Malfunction Indicator (MI) on the instrument cluster. In the United States this symbol often appears with the phrase 'Check Engine', 'Check' or 'Service Engine Soon'. European vehicles tend to use an engine symbol on an orange background.

Other systems As vehicles and their systems become more complex, the functionality of OBD is being extended to cover vehicle systems and components that do not have anything to do with emissions control. Vehicle body, chassis and accessories such as air conditioning or door modules, can now also be interrogated to determine their serviceability as an aid to fault diagnosis.

ABS 8.1 modulators and ECUs

Diagnostic trouble codes When a fault occurs the system stores a diagnostic trouble code (DTC) that can be used to trace and identify the fault. The system will also store important information that pertains to the operating conditions of the vehicle when the fault was set. A service technician is able to connect a diagnostic scan tool or a code reader that will communicate with the microprocessor and retrieve this information. This allows the technician to diagnose and rectify the fault, make a repair or replacement, reset the OBD system and restore the vehicle emissions control system to a serviceable status.

P0100	Mass or Volume Air Flow Circuit Malfunction
P0101	Mass or Volume Air Flow Circuit Range/Performance Problem
P0102	Mass or Volume Air Flow Circuit Low Input
P0103	Mass or Volume Air Flow Circuit High Input
P0104	Mass or Volume Air Flow Circuit Intermittent
P0105	Manifold Absolute Pressure/Barometric Pressure Circuit Malfunction
P0106	Manifold Absolute Pressure/Barometric Pressure Circuit Range/Performance Problem
P0107	Manifold Absolute Pressure/Barometric Pressure Circuit Low Input
P0108	Manifold Absolute Pressure/Barometric Pressure Circuit High Input
P0109	Manifold Absolute Pressure/Barometric Pressure Circuit Intermittent
P0109	Intake Air Temperature Circuit Malfunction
P0111	Intake Air Temperature Circuit Range/Performance Problem
P0112	Intake Air Temperature Circuit Low Input
P0113	Intake Air Temperature Circuit High Input
P0114	Intake Air Temperature Circuit Intermittent
P0115	Engine Coolant Temperature Circuit Malfunction
P0116	Engine Coolant Temperature Circuit Range/Performance Problem
P0117	Engine Coolant Temperature Circuit Low Input
P0118	Engine Coolant Temperature Circuit High Input
P0119	Engine Coolant Temperature Circuit Intermittent

DTC examples

P Code composition The diagnostic trouble code (DTC) is displayed as a five character alphanumeric code. The first character is a letter that defines which vehicle system set the code, be it Powertrain, Body, or Chassis.

P Codes are requested by the microprocessor controlling the powertrain or transmission, and refer to the emissions control systems and their components.

B Codes are requested by the microprocessor controlling the body control systems. Collectively these are grouped as lighting, air conditioning, instrumentation, or even in-car entertainment or telematics.

C Codes are requested by the microprocessor controlling the chassis systems that control vehicle dynamics such as ride height adjustment and traction control.

The four numbers that follow the letter detail information pertaining to what sub-system declared the code. An example is shown here.

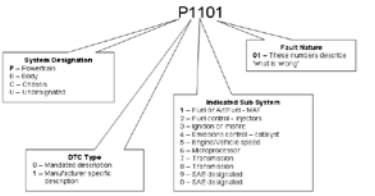

P Code composition

P – Powertrain System set the code
B – Body System set the code
C – Chassis System set the code
U – Unused, but has been 'stolen' to represent communication errors

Summary A major contributing factor to environmental health issues in the Unites States was found to be motor vehicle emissions pollution. Scientific studies by government sponsored academic establishments and vehicle manufacturers then took place over several years. Legislative bodies were formed which later developed and enacted vehicle emissions control legislation, which forced vehicle manufacturers to develop control strategies and incorporate them within their production vehicles.

As microprocessor technologies became more advanced and commercially viable, the legislation was augmented to include a self-diagnosing onboard diagnostic system, which would report when the emissions control system was unserviceable. First attempts by manufacturers to use such a system were applied unilaterally which resulted in confusion, regenerative work and a poor reception of the OBD (now termed OBD1) concept. A revision of the legislation adopted SAE recommended standards, which resulted in the OBD (now termed OBD2) system becoming largely generic and applicable across the whole range of vehicle manufacturers.

European OBD (EOBD) manifested itself in a form very similar to that observed in the United States.

Read the previous section again and note down some key bullet points here:

-
-
-
-

On board diagnostic monitors

Introduction This section will cover the fundamentals of some of the on board diagnostic systems employed on mainstream gasoline/petrol vehicles. The concept of how the OBD system is divided into a series of software based serviceability indicators, known as 'OBD monitors', is also covered.

In order to be compliant with legislation and sell vehicles, manufacturers needed to engineer 'early warning' monitoring sub-systems. These determined when emission control systems had malfunctioned, to the extent that tailpipe emissions had, or were likely to, exceed a legislated level. Onboard diagnostic 'monitors' were derived for this purpose.

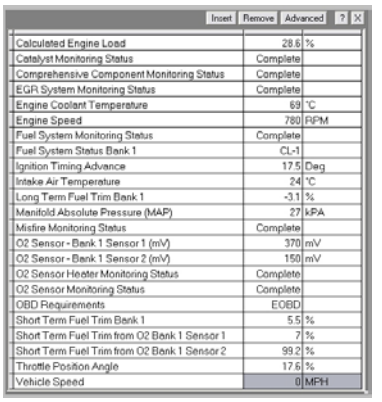

Calculated Engine Load	28.6	%
Catalyst Monitoring Status	Complete	
Comprehensive Component Monitoring Status	Complete	
EGR System Monitoring Status	Complete	
Engine Coolant Temperature	69	°C
Engine Speed	780	RPM
Fuel System Monitoring Status	Complete	
Fuel System Status Bank 1	CL-1	
Ignition Timing Advance	17.5	Deg
Intake Air Temperature	24	°C
Long Term Fuel Trim Bank 1	-3.1	%
Manifold Absolute Pressure (MAP)	27	kPA
Misfire Monitoring Status	Complete	
O2 Sensor - Bank 1 Sensor 1 (mV)	370	mV
O2 Sensor - Bank 1 Sensor 2 (mV)	150	mV
O2 Sensor Heater Monitoring Status	Complete	
O2 Sensor Monitoring Status	Complete	
OBD Requirements	EOBD	
Short Term Fuel Trim Bank 1	5.5	%
Short Term Fuel Trim from O2 Bank 1 Sensor 1	7	%
Short Term Fuel Trim from O2 Bank 1 Sensor 2	99.2	%
Throttle Position Angle	17.6	%
Vehicle Speed	0	MPH

Monitor status and other live readings using AutoTap

Component monitor The 'component monitor' is responsible for determining the serviceability of sensors and actuators.

Intelligent component drivers linked to the microprocessor have the ability to enable or disable sensors or actuators, and to receive signals. In combination with these drivers, the microprocessor can detect circuit faults on the links between microprocessor and component. In addition, rationality tests can be performed on sensors. For example the MAF sensor is tested by observing its output value in comparison to a 'mapped' value normalized by throttle position and engine speed. Should the MAF output lie outside of an acceptable range of values for that engine speed/throttle set point, then a fault is reported.

Mass air flow (MAF) sensor

The component monitor is also capable of monitoring for circuit faults. Open circuits, short circuits to ground or voltage can be detected. Many manufacturers also include logic to detect intermittent errors.

Catalyst monitor The purpose of the catalyst is to reduce tailpipe exhaust emissions. The 'catalyst monitor' is responsible for determining the efficiency of the catalyst by inferring its ability to store oxygen. The method favored by the majority of manufacturers is to fit an oxygen sensor before and after the catalyst.

As the catalyst's ability deteriorates, the oxygen sensor downstream of the converter will respond to the oxygen in the exhaust gas stream and its signal response will start to exhibit a characteristic similar to the upstream oxygen sensor.

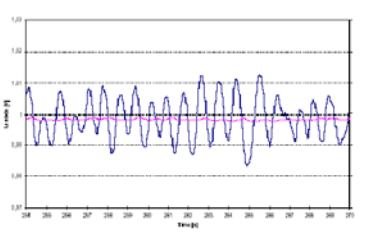

Upstream and downstream exhaust gas sensor activity – good catalyst

An algorithm within the microprocessor analyses this signal and determines whether the efficiency of the catalyst has degraded beyond the point where the vehicle tailpipe emissions exceed legislated levels. If the microprocessor determines that this has occurred, a malfunction and a DTC is reported. Repeat detections of a failed catalyst will result in MIL illumination.

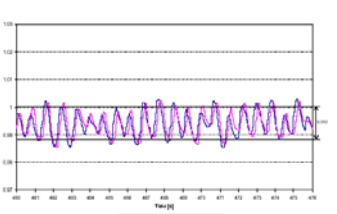

– failed Catalyst

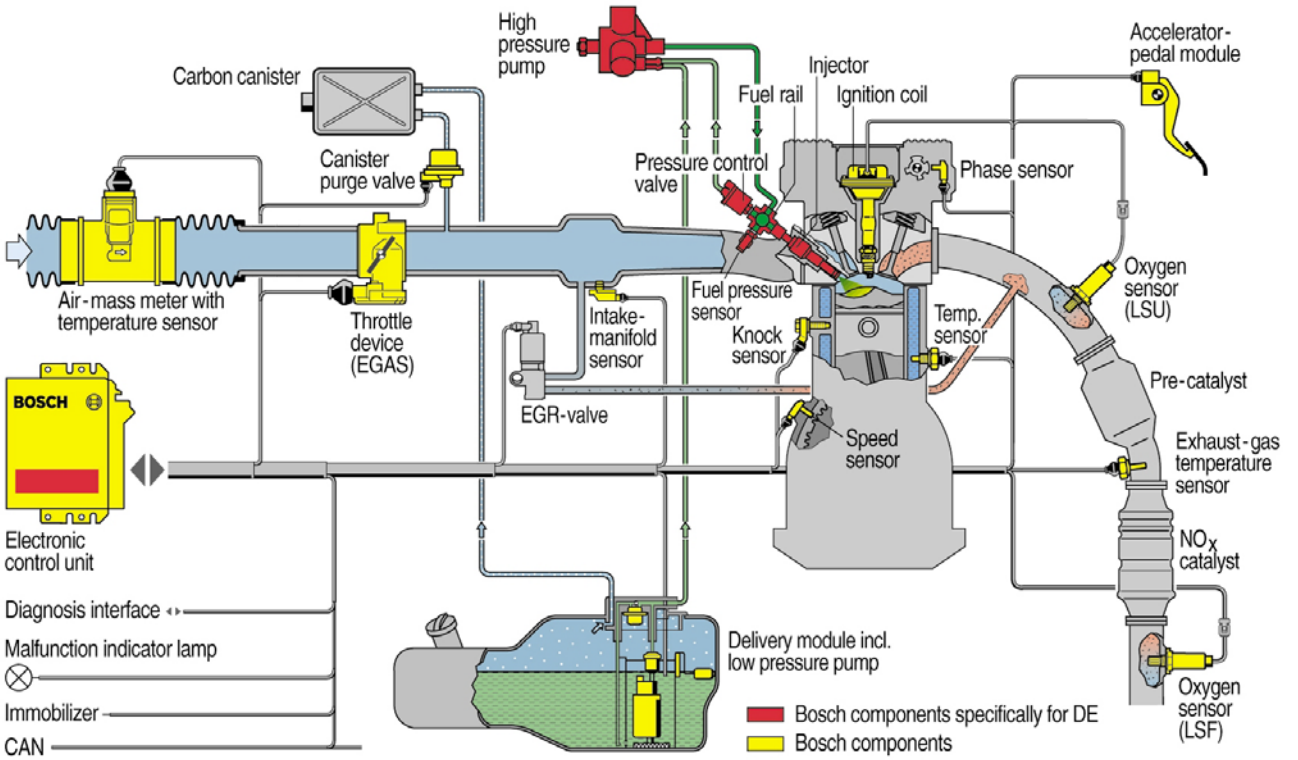

Exhaust gas oxygen sensors positioned pre and post catalyst (highlighted)

Evaporative system monitor The purpose of the evaporative emissions control system (EVAP), is to store and subsequently dispose of unburned hydrocarbon emissions thus preventing them from entering the atmosphere. This is achieved by applying a vacuum across the fuel tank. The vacuum causes fuel vapor to be drawn through a carbon canister in which the hydrocarbon vapors are collected and stored.

During certain closed loop fuel control conditions the microprocessor activates a solenoid controlled 'vapor management valve', which allows the manifold vacuum to draw vapor from the carbon canister into the intake manifold. The fuel vapor is then combined and combusted with the standard air/fuel charge.

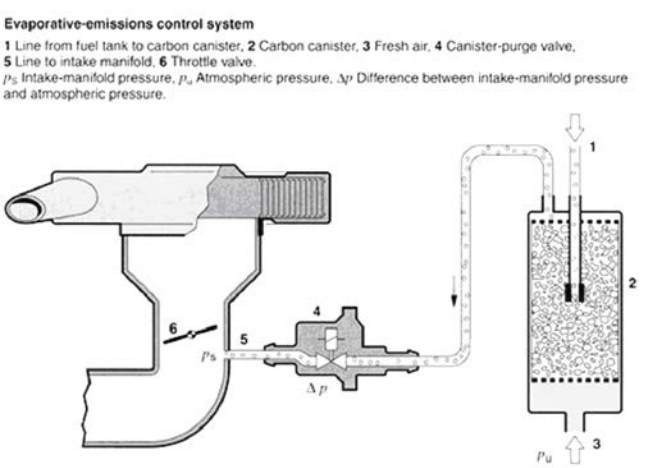

Evaporative emissions control system (Source: Bosch)

The evaporative system monitor is responsible for determining the serviceability of the EVAP system components and to detect leaks in the vapor lines. European legislation currently dictates that these checks are not required. However, vehicles manufactured in the USA after 1996 and before 1999 generally employ a system that uses a pressure or vacuum system. This must be able to detect a leak in a hose or filler cap that is equivalent to that generated by a hole, which is 0.04" (1mm) in diameter. Vehicles manufactured after 2000 must support diagnostics that are capable of detecting a 0.02" (0.5mm) hole.

Fuel system monitor As vehicles accumulate mileage then so do the components, sensors and actuators of the emissions control systems. Mass airflow sensors become dirty and their response slows with age. Exhaust gas oxygen sensors also respond slower as they are subject to the in-field failure modes such as oil and fuel contamination, thermal stress and general ageing. Fuel pressure regulators perform outside of their optimum capacity, fuel injectors become slower in their response, and partial blockages mean that they deliver less and sometimes more fuel than requested.

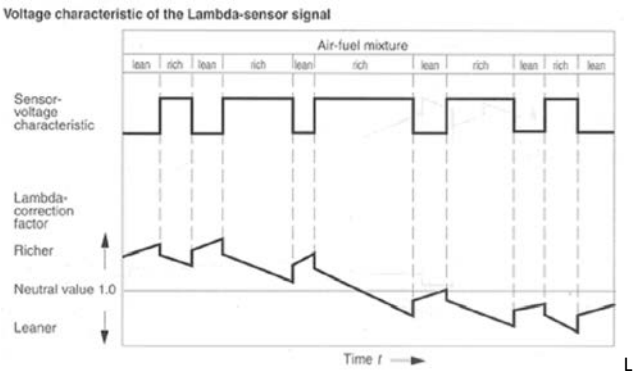

Lambda sensor signal fuelling error

If this component ageing were not compensated for, it would mean that the fuel system would not be able to maintain normal fuelling around stoichiometric air fuel ratio as shown here.

Fuel system monitor strategy This compensation strategy is known as adaptive learning. A dedicated piece of software contained within the ECU learns these deviations away from stoichiometry. They are stored in a memory that is only reset when commanded by a technician. The memory is retained even on battery changes.

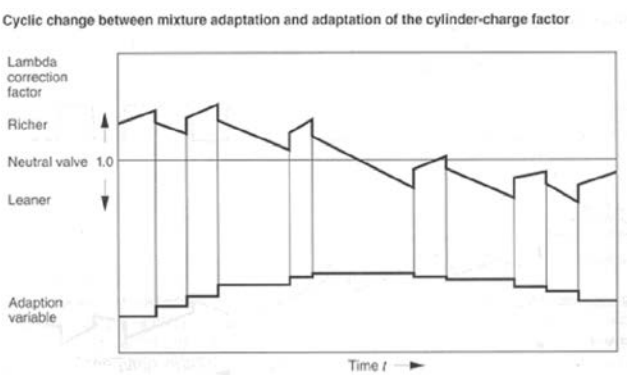

Adaptive fuel strategy in operation

An exhaust gas oxygen sensor produces a voltage, which is fed back to the microprocessor. This is then processed to determine the instantaneous or 'short-term' fuel correction to be applied. This is done in order to vary the fuel around stoichiometry and allow three-way catalysis to occur.

Referring to the figure shown here, it can be seen that when there is a component malfunction, which causes the AFR in the exhaust stream to be rich, then there is a need to adapt to this to bring the AFR back into the region of stoichiometry. The value of the long term fuel trim correction must decrease because less fuel is required.

Fuel system monitor long term Should the situation continue and the problem causing rich AFR becomes slowly worse, the error adaption will continue with an ever-decreasing value for the long term fuel trim being applied, learned and stored in memory.

The purpose of the fuel monitor is to determine when the amount of long-term adaptive correction has reached the point where the system can no longer cope. This is also where long-term fuel trim values reach a pre-defined or 'calibrated' limit at which no further adaption to error is allowed. This limit is calibrated to coincide with exhaust tailpipe emissions exceeding legislated levels. At this point and when a short-term fuelling error exceeds another 'calibrated' limit, a DTC is stored and, after consecutive drives, the MIL is illuminated.

Misfire monitor When an engine endures a period of misfire, at best tailpipe emissions will increase, and at worst, catalyst damage and even destruction can occur. When misfire occurs, the unburned fuel and air is discharged direct to the exhaust system where it passes directly through the catalyst.

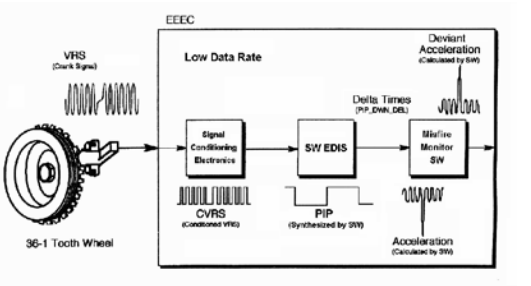

Crankshaft mounted wheel and sensor source of angular acceleration

Subsequent normal combustion events can combust this air/fuel charge in something akin to a bellows effect, which causes catalyst temperatures to rise considerably. Catalyst damage failure thresholds are package specific but are in the region of 1000 °C (1800 °F). The catalyst itself is a very expensive service item whether replaced by the customer or the manufacturer under warranty.

The misfire monitor is responsible for determining when misfire has occurred, calculating the rate of engine misfire, and then initiating some kind of protective action in order to prevent catalyst damage. The USA requires misfire monitoring throughout the revs range but European legislation requires monitoring only up to 4500 rev/min.

The crankshaft sensor generates a signal as the wheel rotates. The microprocessor processes this signal to determine the angular acceleration of the crankshaft produced by each engine cylinder, when a firing event occurs. When a misfire occurs the crankshaft decelerates and a cam position sensor identifies the cylinder that misfired.

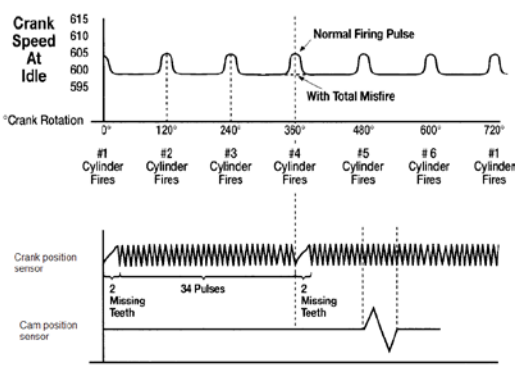

Detection of misfire by crank sensor signal

Exhaust gas recirculation monitor As combustion takes place, within the engine cylinders, nitrogen and oxygen combine to form various oxides of nitrogen. These NOx emissions can be reduced, up to a certain point, by enriching the air/fuel ratio beyond the point at which hydrocarbon (HC) and carbon monoxide (CO) emissions begin to increase. NOx emissions are generated as a function of combustion temperature.

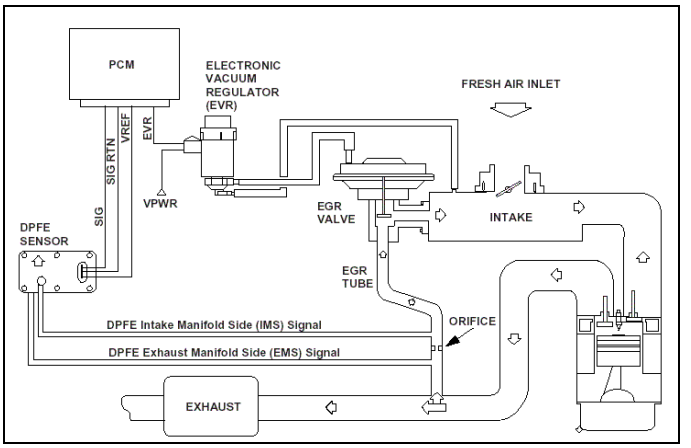

EGR system using differential pressure monitoring

Most manufacturers employ an emissions control sub-system know as exhaust gas recirculation (EGR). This recirculates some of the exhaust gases back into the normal intake charge. These 'combusted' gases cannot be burnt again so they act to dilute the intake charge. As a result in-cylinder temperatures are reduced, along with NOx emissions.

The exhaust gas recirculation system monitor is responsible for determining the serviceability of the sensors, hoses, valves and actuators that belong to the EGR system. Manufacturers employ systems that can verify that the requested amount of exhaust gas is flowing back into the engine intake. Methods can be both intrusive and none intrusive such as a change in manifold pressure as EGR is flowed and then shut off.

Secondary air monitor The exhaust system catalyst is not immediately operative following a start where the engine and exhaust system is cool. Temperature thresholds above which the catalyst is working, and three-way catalysis is occurring, vary as a function of the exhaust gas system package. Typically, this 'light off' point occurs at temperatures of about 260 ^{o}C/500 ^{o}F. Some manufacturers employ electrically heated catalysts to reach this temperature rapidly but these are expensive to manufacture and replace.

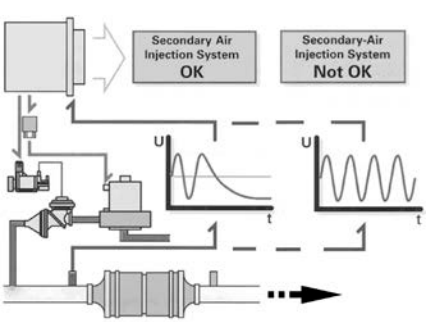

Secondary airflow diagnostic monitoring

The secondary air monitor is responsible for determining the serviceability of the secondary air system components. Most strategies monitor the electrical components and ensure the system pumps air when requested by the ECU. To check the airflow the ECU observes the response of the exhaust gas oxygen sensor after it commands the fuel control system to enter open loop control and force the AFR to become rich. The secondary air pump is then commanded on, and the ECU determines the time taken for the exhaust gas oxygen sensor to indicate a lean AFR. If this time exceeds a calibrated threshold then a diagnostic trouble code is stored.

Exhaust gas oxygen sensor monitor The oxygen sensor output voltage is proportional to the relationship between the residual oxygen in the exhaust gas and that of the surrounding air. This voltage is processed by the microprocessor as part of a closed loop fuel control system which in-turn ensures three-way catalysis.

Exhaust gas oxygen sensor – zirconia type (Source: Bosch Press)

The exhaust gas oxygen sensor monitor is responsible for determining the serviceability of all of the oxygen sensors and their heater elements. Manufacturers employ an algorithm similar to the component monitor to detect open circuits and other common faults.

Additional diagnostics exist for when the sensor is 'stuck' lean or rich. The monitor waits for the sensor to 'switch' as it normally would and if this does not occur within a calibrated timeframe a DTC is reported and MIL illumination occurs if the fault is apparent on consecutive drives.

Diagnostics also exist for when a sensor response is slow. As the sensor ages it continues to switch but with a much reduced amplitude and frequency. When this occurs it induces fuelling errors.

Summary Clearly OBD is here to stay – and be developed. It should be seen as a useful tool for the technician as well as a key driver towards cleaner vehicles. The creating of generic standards has helped those of us at the 'sharp end' of diagnostics significantly!

OBD2 has a number of key emission related systems to 'monitor'. It saves faults in these systems in a standard form that can be accessed using a generic scan tool.

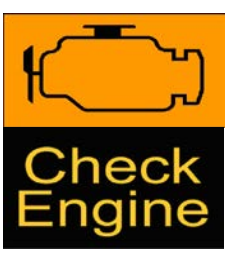

Check engine lights – and a car exhaust video!

Read the previous section again and note down some key bullet points here:

-
-
-
-
-

Scanners

OBD scanners This section will outline the use and features of two scanners, the AutoTap scanner and the Bosch KTS diagnostic system.

The first of these, the AutoTap scanner, was chosen as a case study because it provides some advanced features at a *very* competitive price.

Note: The scanner is designed to work with OBD2 systems. However, it also worked fine on several EOBD systems we tested. For more information checkout the website: www.autotap.com.

AutoTap scanner and extension cable

Diagnostic connector Like any other scan tool or code reader, the AutoTap scan tool connects the special OBD2 (CAN) plug-in-port, on or under the dash. A USB connection then makes the scanner connection to a computer. The AutoTap scanner and software translates the signals from the vehicle's computer-controlled sensors to easy-to-read visual displays. It also reads out diagnostic trouble codes (DTCs).

Diagnostic connector

Software Running on a standard PC or laptop, the software allows the technician to choose which parameters or signals they want to see, and to view them as tables, graphs or gauges.

It is possible to set the ranges and alarms and pick display colors. Once a screen configuration is created it can be saved for future use. Different screen configurations are useful for different vehicles, or perhaps one for major maintenance, one for tuning, one for quick checks at the track would be useful.

Data is provided in easy-to-read views with multiple parameters. Graphs can be used to show short-term logs, and gauges for instant readings.

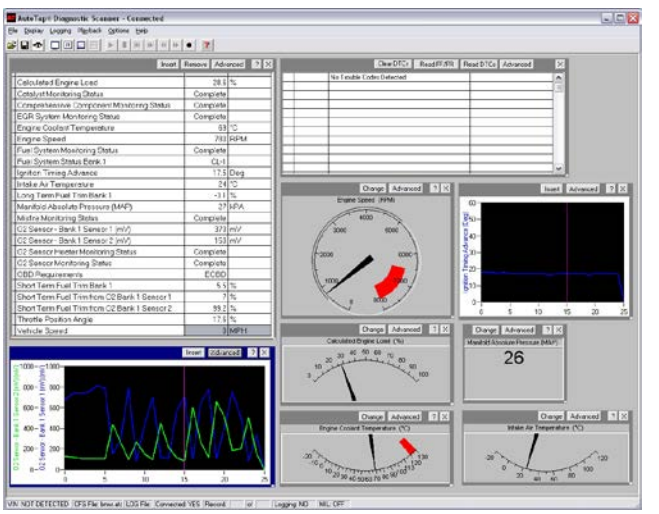

Screen grab showing gauges and graphs

Information DTCs can be checked immediately on connecting the scanner and starting up the software. This gives the critical info needed in the shortest time possible. When repairs are completed the tool can be used to turn off the malfunction indicator light (MIL) – also referred to as the 'check engine' light.

The software will also log data, for example, during a road test. This is particularly useful for diagnosing intermittent faults. The data can be played back after a road or dynamometer test. It can also be exported to a spreadsheet file for later analysis. Overall, to read live data and get access to powertrain (engine related) system DTCs, this is an excellent piece of equipment.

Scanner kit

Bosch KTS diagnostic system This section will outline the use and features of the Bosch KTS 650 diagnostic system. This particular tool was chosen as a case study because it provides everything that a technician needs to diagnose faults. This higher cost system is a combination of a scanner, multimeter, oscilloscope and information system (when used with Esitronic). For more information visit the website: www.bosch.com.

Diagnostic system in use

The portable KTS 650, with built-in computer and touch-screen, can be used anywhere. It has a 20GB hard drive, a touch-screen and a DVD drive. When being used away from the repair shop, the power supply of the KTS 650 comes from the vehicle battery or from rechargeable batteries with one to two hours' service life. For use in the workshop, there is a tough wheeled trolley with a built-in charger unit. As well as having all the necessary adapter cables, the trolley can also carry a printer and an external keyboard.

Adapter and cable kit

As well as ISO norms for European vehicles and SAE norms for American and Japanese vehicles, the KTS testers can also deal with CAN norms for checking modern CAN bus systems, which are coming into use more and more frequently in new vehicles. The testers are connected directly to the diagnostics socket.

The following sequence of images show a number of steps taken to diagnose a fault, using the KTS, on a vehicle that had poor running symptoms and the MIL was illuminated.

Vehicle under test

The first step in this procedure was to connect the equipment to the car's diagnostic socket. The ignition should be off when the connection is made and then switched on.

Connect the serial lead to the diagnostic socket

On this system the data for a wide range of vehicles is included on the system. The particular vehicle make and engine etc. can be selected from the menu system.

Choose the vehicle type

The standard test for stored diagnostic trouble codes (DTCs) was run and the result suggested that there was a fault with the air flow sensor. The specific fault was that the signal value was too low. No real surprise as we had disconnected the sensor to simulate the fault!

Take a readout from the control unit memory (DTC display)

This is the connection that was causing the problems. Further information about its pin configuration can be looked up in the Esitronic database.

The system also provides typical readings that should be obtained on different pins. For example, the supply and earth as well as the signal outputs.

Additional test can be carried out, using the KTS as an oscilloscope for example, to determine the fault.

Air flow sensor connection

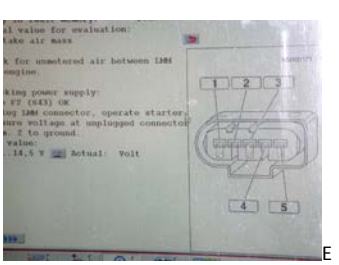

Esitronic information for the air flow sensor

The faulty connection was replaced and general checks carried out to ensure no other components had been disturbed during the testing and repair process.

Make repairs

The final task was to clear the fault code memory and turn off the malfunction indicator light (MIL).

Road tests showed that the fault had been rectified.

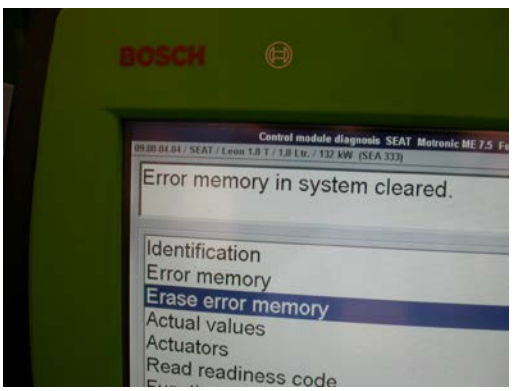

Erase the fault from the memory

Summary This section has briefly examined two scanners at different ends of the market. The features of these scanners differ but the basic principle, that they read OBD codes, is the same.

The key, of course, is to now practice using a scanner on a real vehicle!

AutoTap

Bosch

2. **Worksheet** Carry out OBD tests of vehicles systems

Read the previous section again and note down some key bullet points here:

-
-
-
-
-

Diagnostics Simulations

Voltmeter tests

Introduction

Introduction The multimeter on this screen and in this section is set to measure DC voltage. To take measurements, click and drag the red and black probes in turn to the numbered connection points. When both probes are connected, the meter will display the voltage.

Methods If you reverse the connections you will note that the reading changes from positive to negative. Ideally, you should make sure the black (B) probe is connected to the lower voltage point (i.e. the chassis ground or earth) and then the reading will make more sense when red (R) is connected.

On some screens you will find that the system does not allow incorrect connections!

Click and drag the probes and then note here the six possible readings when three connection points are used.

B-R
1-2
1-3
2-3
2-1
3-1
3-2

Voltage readings

Simulated systems On some screens you will be able to measure voltages on images of real systems as shown here.

Tests on a battery

Circuits On some screens, circuit diagrams will be used but the meter can be connected the same way.

✍ Draw the circuit here and note the readings

Summary Diagnosing faults on a vehicle often means that tests need to be carried out using a multimeter. This section has been a short introduction to the simulations for a DC voltmeter that you can use to practice this skill. However, as soon as possible, get your hands dirty on the real thing!

Testing a circuit

Look back over the previous section and write out a list of the key bullet points here:

Series and parallel circuits

Introduction All the circuits on an automobile are connected in series, parallel or a combination of the two. Knowing what voltages to expect at each part of a circuit is essential for diagnosing faults. The simulations in this section show some basic circuits where readings can be taken. Remember the rules are just the same when working on more complex circuits.

Series circuit This screen shows a simple series circuit with three resistors. Remember that these resistors can represent any electrical item on a car. Use the meter to take voltage readings at the different test points. Notice that if you add the readings across each resistor then the result is the same as the battery voltage.

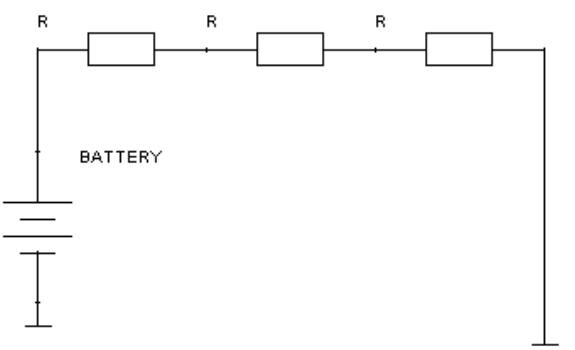

Series circuit fault This circuit has a problem. Take the readings again and you will notice that adding the readings across the resistors does not result in the battery voltage. This symptom indicates that there is a fault. Check the readings again and then see if you agree with the answer which will show if you click the 'A' button – and don't cheat!

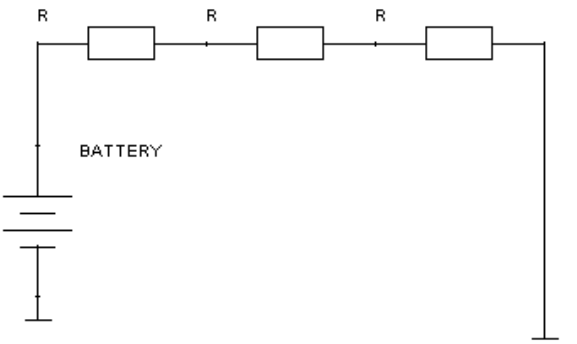

Parallel circuit This screen shows a simple parallel circuit. Take the readings and you will see that the same battery voltage is supplied across all the resistors. This is a feature of parallel circuits.

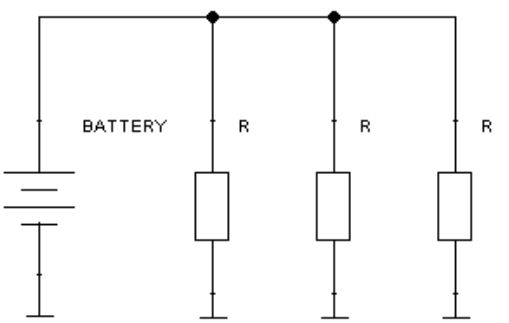

Parallel circuit fault This circuit has a problem. Take the readings again and you will notice that the voltage across one of the resistors is not correct. Check again and from the results, see if you can determine what is wrong. Click the 'A' button for the answer – and again, don't cheat!

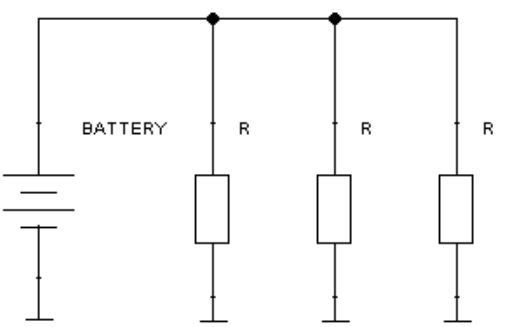

Series-parallel circuit Circuits on a vehicle are a combination of series and parallel as represented in a very simple way here. Take the readings with the voltmeter and see if they agree with the ideas we developed in the earlier screens. Click 'A' for my answer.

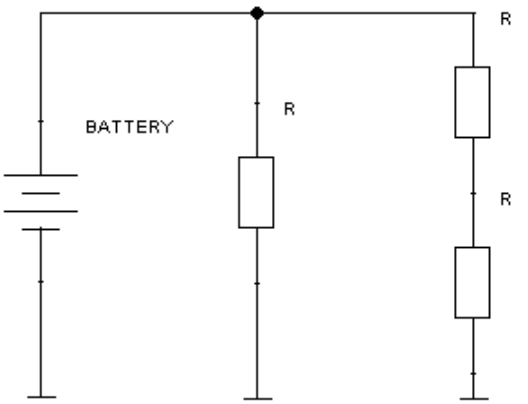

Series-parallel circuit fault Let's assume that in this circuit the resistor R represents an instrument panel dimmer control. The symptoms here are that the first lamp seems to light correctly but the second one does not dim, it is at full brightness. Take the readings to determine the fault – click 'A' for my answer.

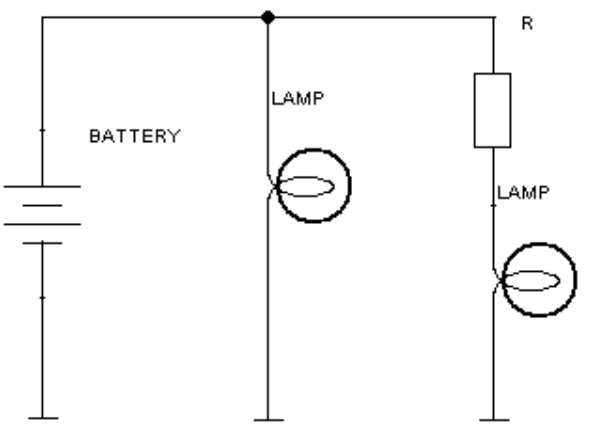

Summary This section has shown how simple voltage readings are used to determine faults on series and parallel circuits – remember that EVERY circuit on a vehicle is series or parallel – there are no other ways to do it!

Look back over the previous section and write out a list of the key bullet points here:

Lighting circuit

Introduction This section starts with a basic lighting circuit and then a circuit that incorporates a relay. In both examples the first circuit is working correctly and the second one has a fault – but not the same fault as shown here!

Basic lighting circuit All the switches are in the position shown in red on this diagram and the circuit is operating correctly. Use the meter to take readings on this circuit and keep a note so that you can compare them to those you get on the next screen where a fault has been introduced.

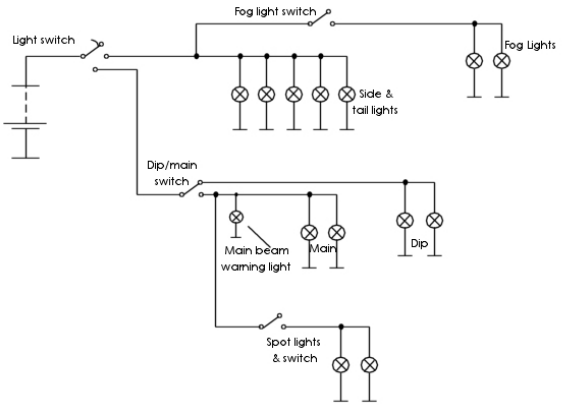

Basic lighting circuit fault The symptoms of the fault on this circuit are that the side, fog, spot and dip lights work correctly but the main beam lights are both dim. The main beam warning light does not come on. These symptoms should narrow down the fault (or faults!) but use the voltmeter to check exactly what the problem is.

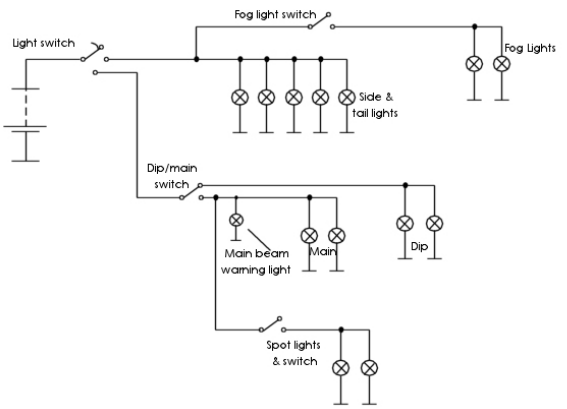

Lighting circuit with a dim-dip relay All the switches are in the position shown in red on this diagram and the circuit is operating correctly. Use the meter to take readings on this circuit and keep a note so you can compare them to those that you get on the next screen where a fault has been introduced.

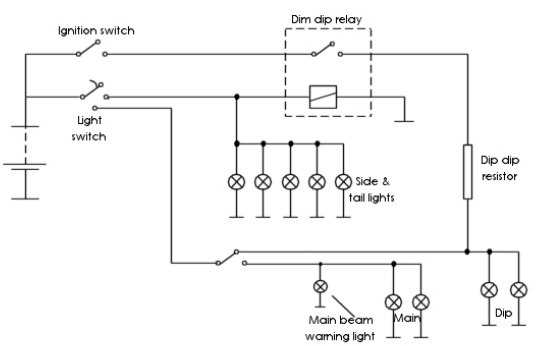

Lighting circuit with a dim-dip relay fault The symptoms of the fault on this circuit are that the dip lights are dimmed even when they are switched on fully. These symptoms should narrow down the fault (or faults!) but use the voltmeter to check exactly what the problem is.

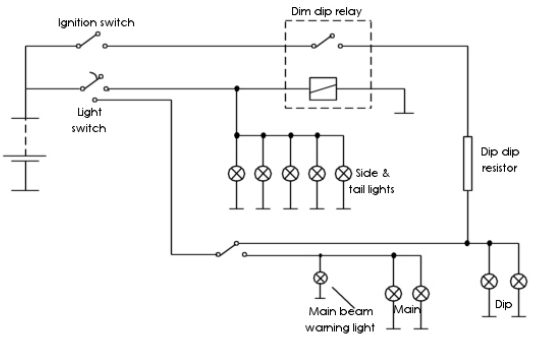

Summary A lighting circuit like any other, can be checked using a voltmeter. Remember, as a general guide, the circuit should always supply at least 95% of the battery voltage to the bulbs. Anything less than this indicates a high resistance and zero indicates an open circuit.

Charging system

Battery voltage The easiest test on the charging system is to start by checking the battery voltage with the engine off – after waiting a few minutes to make sure the battery is not surface charged. Carry out the test on this screen and note the reading.

Charging voltage The engine is now running, at about 3000 rev/min. Check the voltage and note the reading. Click ‘A’ for my interpretation.
More detailed tests The previous two tests are very reliable but where you suspect problems you will need to dig a little deeper. Take the reading again and click ‘A’ for my interpretation.

Circuit checks On this screen there are now connection points on the alternator main output terminal and the chassis, as well as across the battery terminals. The engine is running at about 3000 rev/min and the headlights are switched on to load the alternator.

Take measurements on this circuit and note the readings. Is there a fault and if so, what could it be? Check the next screen for my answer.

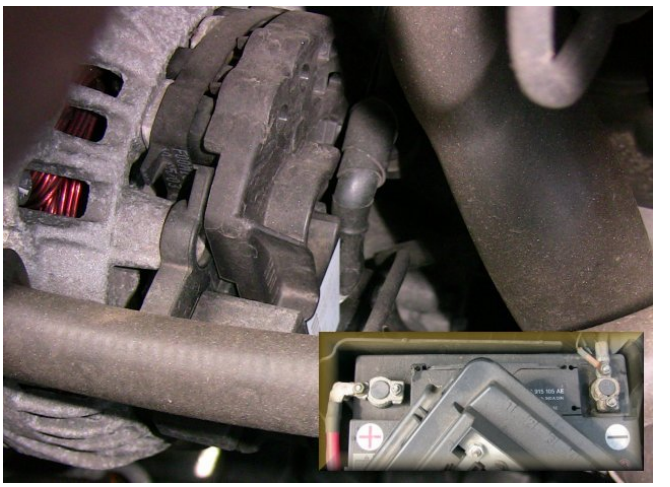

Answer The readings on the previous screen indicate that there is a high resistance in the main output connection between the alternator and the battery positive terminal.

On this screen the fault has been repaired so check the readings again and make notes.

Summary Normal battery voltage is about 12.6V and when the engine is running, this should increase to about 14.2V. However, on some smart charging vehicles this can vary depending on conditions so as always, check manufacturers' data. Circuit voltage drop should usually be less than a few tenths of a volt.

Look back over the previous section and write out a list of the key bullet points here:

Starting system

Introduction Because a starter motor draws a lot of current from the battery, the condition of its circuit is critical. A high resistance connection will cause slow cranking or no cranking at all.

Battery Clearly the battery is an important part of the starter circuit. So, before carrying out any voltage checks it is essential to know that the battery is fully charged and in good order. The methods for battery testing are explained in other sections of this material.

Volt drop testing This circuit shows the minimum readings you should get when testing a starter circuit. Note that all these readings are taken with the starter cranking – or at least attempting to crank the engine.

For each of the following example faults we will assume the battery is in good order and that the reading shown here as V3, across the battery, was above 11V.

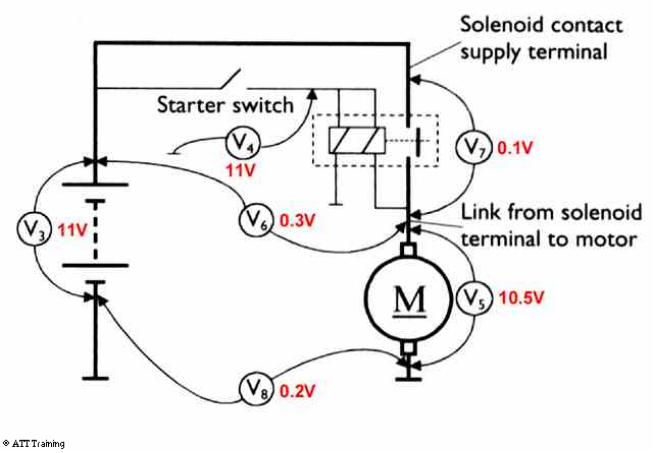

Example fault 1 The symptoms of the fault on this circuit are that the starter is cranking slowly. Use the voltmeter to check exactly what the problem is.

Example fault 2 The symptoms of the fault on this circuit are that the starter is NOT cranking. Use the voltmeter to check exactly what the problem is.

Example fault 3a The symptoms of the fault on this circuit are that the starter is cranking slowly. Use the voltmeter to check exactly what the problem is.

Example fault 3b This fault is the same as on the previous screen. Assume that connection point 1 is on

the battery earth post – now what is the fault?

Summary Because of the high current draw even a low resistance connection will cause unwanted volt drop in a starter circuit – using a voltmeter as shown in this section makes it easy to find the source of the problem.

Look back over the previous section and write out a list of the key bullet points here:

Oscilloscope tests

Introduction

Operation The operation of the oscilloscope simulation is similar to the voltmeter – so if you haven't worked through that section, it will be worth a look now.

As the probes are connected to the numbered points a waveform will be displayed. Try it out on this screen. Click the green button to select the 'Scope' first if necessary.

Note that these are just random waveforms for demonstration purposes. Right-click and select 'Zoom in' to examine a waveform in more detail.

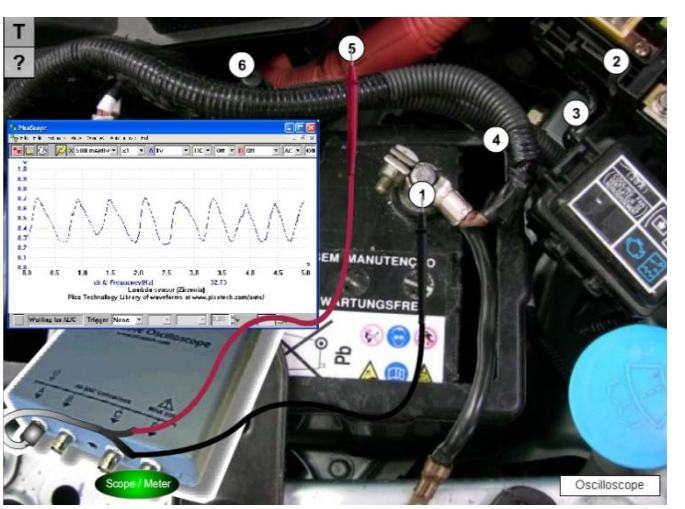

Demo of the 'scope' simulation

PicoScope The waveforms used in this simulation are genuine results of using an automotive PicoScope. They were downloaded from their library or captured using our equipment.

Automotive diagnostics kit (www.picoscope.com)

Example waveform This waveform is from a connection to a five-wire stepper motor. However, the important aspects for now are for you to note the settings used to display a waveform. The vertical scale is voltage and in this case it is set to a maximum of 15V. The horizontal scale is time – or the timebase. In this case in order to 'paint' the way the voltage to this motor changes over time, a scale of 20 milliseconds per division has been set – and there are ten divisions on the screen.

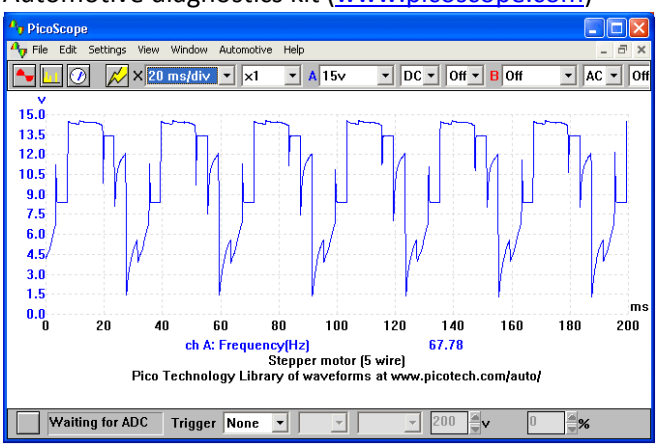

Stepper motor waveform

The real PicoScope will adjust these settings for you if necessary and you will be pleased to know that our simulation will do the same.

Summary Try out the connections again on this screen. You will note for example than if you connect the black lead to a higher number that the red lead – it will return to the start position.

In almost all cases, the black probe should be connected to a good earth/ground like the battery negative terminal, and then the tests are carried out by moving the red probe.

Look back over the previous section and write out a list of the key bullet points here:

Ignition

Introduction A good oscilloscope is essential for checking ignition systems. The automotive diagnostics kit shown here is highly recommended. This section is an introduction to checking ignition and all the waveforms shown are systems in good working order.

Automotive diagnostics kit (www.picoscope.com)

Hall effect sensor This simulation shows a Hall effect sensor in a distributor. Most distributors of this type have three terminals marked '- 0 +' or similar, represented here as connection points 2, 3 and 4 with 1 as the earth/ground connection. The - and + are a stabilised voltage supply and the '0' is the Hall signal. Connect the scope to each terminal in turn and look at the waveform.

High voltage secondary circuit This screen is a very simple representation of a connection to the main HT wire (king lead) from an ignition coil to a conventional distributor. In reality the connection is made with a clamp that goes over the wire.

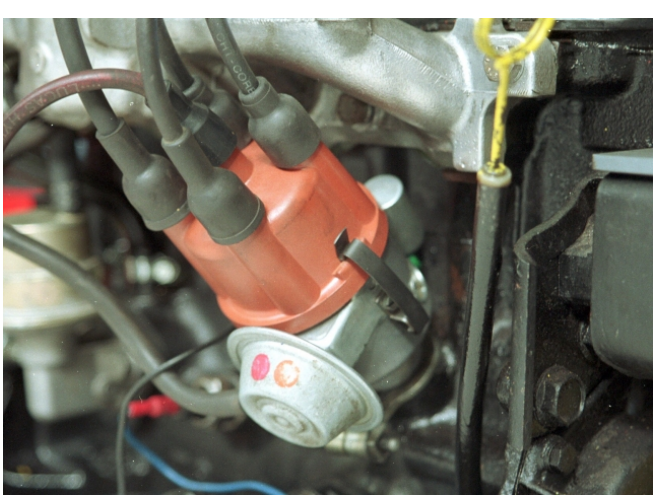

Distributorless ignition This simulation screen allows you to make a number of different connections as follows

1. Earth or ground
2. Crank sensor output
3. DIS coil low tension/voltage circuit
4. Spark plug leads

Make these connections and check out the resulting waveforms.

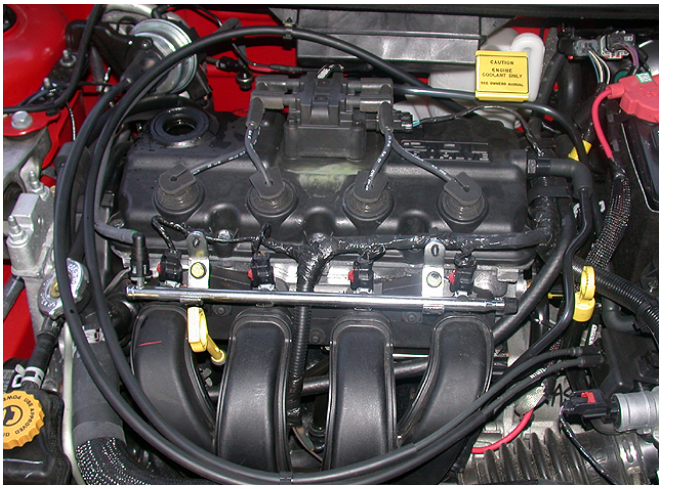

Coil on plug (COP) or direct ignition 1 This screen shows a connection to the low voltage coil switching circuit.

Coil on plug (COP) or direct ignition 2 This screen shows connections to the high voltage coil spark plug outputs. A special adapter is often needed to make this connection. Check each cylinder in turn to see why this engine is misfiring.

Summary Scope testing allows us to check a system in great detail. Get used to what a waveform for a correctly operating component looks like so that you will recognise when there is a fault.

Look back over the previous section and write out a list of the key bullet points here:

Fuel injection

Introduction A good oscilloscope is essential for checking fuel and engine management systems. This section is an introduction to checking a gasoline direct injection (GDI) system, and all the waveforms shown are for components in good working order.

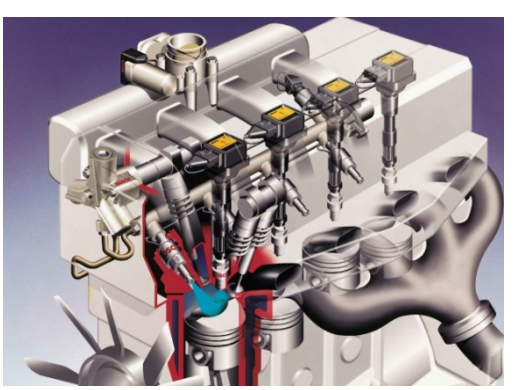

GDI 1 The connections on this screen allow you to check the waveforms from:

- Earth/Ground
- Oxygen sensor (before the cat)
- Engine speed sensor
- Air mass meter
- Phase sensor
- Throttle sensor

In each case a known good waveform is shown.

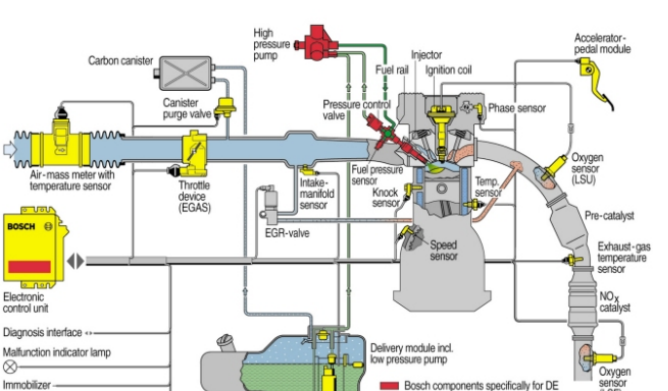

GDI 2 The connections on this screen allow you to check the waveforms from:

- Earth/Ground
- Fuel injector
- EGR valve
- Ignition primary
- Purge valve

In each case a known good waveform is shown.

Summary Scope testing allows us to check a system such as the GDI one shown in this section in great detail. Get used to what a waveform for a correctly operating system looks like so that you will recognise when there is a fault.

Look back over the previous section and write out a list of the key bullet points here:

Brakes

Safety, tools & equipment and customer care

Health and Safety

Safety First Before carrying out any service or repair work, refer to all appropriate health and safety guidelines. Always follow all safety procedures and observe safety precautions when working on vehicles. Some specific hazards are listed in this section. General safety advice is also included.

Be smart, be safe[1]

Check safety procedures

Asbestos Many types of brake-lining material and friction discs contain asbestos fibers. Always follow safety precautions when handling asbestos. Special cleaners and washers are available for cleaning brake components before work starts.

Special brake cleaner

Running Engines Running engines are sometimes needed for diagnostics and system checks. A running engine presents two hazards: the first is the risk from rotating components and the second from the accumulation of exhaust gas in the workshop. Remain aware of rotating parts such as the fan, belt and pulleys in the areas where you are likely to be working.

Electrically Driven Fans An electrically driven fan is switched on automatically when the temperature of the coolant in the radiator rises above the switch operating temperature. This can occur even when the ignition is switched off. Always keep fingers out of the fan cowl and always remove the battery ground cable when the engine does not need to be running for diagnostic tests.

Exhaust Emissions When running an engine, it is important to prevent the build-up of exhaust gas in the workshop. Use extraction equipment or provide good ventilation.

Extraction equipment

Hot Components When used for prolonged periods, vehicle components can become very hot. In particular, be careful not to touch the exhaust when working under the vehicle or on the engine.

Be aware of hot exhausts

Protective Clothing Overalls should ideally be worn at all times. This protects your clothes as well as your skin. Gloves, goggles, breathing masks, hats and strong footwear may also be necessary.

Be safe

Working Below Vehicles There are a number of hazards to avoid when working below vehicles. One is the risk of hitting your head, which can obviously cause injury. Another risk is the possibility of getting rust and dirt in your eyes. Avoid these problems by wearing a bump cap and goggles whenever working below vehicles. The vehicle must always be supported safely before working underneath or alongside it.

Car on a ramp

Bump caps protect your head

Heavy Loads Jobs that require the lifting and moving of heavy loads pose a risk. Many vehicle components fall into this category. Always tackle these tasks in an appropriate manner by using only the recommended lifting equipment. Ask for assistance if necessary. Even some wheels can be difficult to handle.

Brake drum

Engine

Gearbox

Wheel

Jacking and Supporting Only use the recommended jacking and support points when lifting a vehicle. Refer to the manufacturer's instructions if unsure. Ensure the jack and support stands, which must be used at all times, have an appropriate safe working load (SWL).

Jacking point

Support point

Wheel free bars

Axle stands

Skin Contact When servicing vehicle systems, avoid skin contact with new and used engine oils. Use barrier cream or non-porous gloves. Be careful with hot oil, particularly when carrying out oil draining operations. Never keep oily rags in overall or other pockets and change out of oil contaminated clothing as soon as reasonably possible.

Wear gloves or use barrier cream

Caution-Attention-Achtung! All types of fuel (and particularly the vapors) are highly flammable. They can be ignited from a number of sources. Any exposed flame, a short circuit, a cigarette or, under the right conditions, even a hot object will start a fire.

Take care!

Electrical Sparks Electrical sparks are the most common cause of vehicle fires in the workshop. These can occur during the connection and removal of electrical terminals. Sparks also occur when the engine is cranked with the ignition on and the spark plugs removed. Disconnect the coil or connect the HT cables directly to ground to prevent this.

Short Circuits If a wire or tool is allowed to join the battery positive connection to the negative connection, a serious short circuit will result. A wire would become extremely hot and, in addition to the obvious fire risk, would burn through whatever part of your body it was touching. The demonstration shown here by carried out by trained fire experts. Do NOT attempt to copy it. The same results occur if shorts are made on the vehicle. Be careful!

Original Equipment Always be careful to use approved parts. Original equipment manufacturer's (OEM) parts may be required to meet safety regulations.

Use good quality parts…

For all repairs…

And replacement…

Work

Refrigerant Refrigerant used in air-conditioning systems is dangerous. If it comes in to contact with the skin, it produces severe frostbite. Wear protective goggles and gloves at all times. Use gloves designed for the purpose; leather or fabric gloves are NOT suitable. If refrigerant is exposed to open flames or hot surfaces, it produces toxic gases. Always ensure adequate ventilation when working on air-conditioning systems.

R134a container

Pressurized Cooling Systems If work has to be carried out on the vehicle heater or the cooling system, there is a risk of scalding. The coolant is run at a pressure higher than atmospheric. If the cap is removed when hot, the coolant can boil instantly, ejecting boiling water and steam.

Cooling system

Rotating Driveline Components The Ferrari shown here was being tested on a rolling road. It was being driven at more than 100 mph! Note how important it is to ensure that all driveline components are in good order.

Transmission Wind Up On four-wheel drive vehicles, it is possible for the transmission to "wind up" when the front and rear axles are locked together. This is because the two axles may run at slightly different speeds. When on rough ground it is not a problem because the bouncing and movement allows the tires to slip. On hard surfaces, however, a twist or "wind up" of the components such as driveshafts occurs. When the vehicle is jacked up, the transmission can unwind suddenly causing serious injury. This does not occur on a vehicle with an unlocked center differential or a viscous drive.

Simulation of wind up

Springs Under Compression When coil springs are removed from a suspension strut, they should be held using a special tool. If the fixings are removed without compressing the spring, it may release considerable energy and cause damage or personal injury.

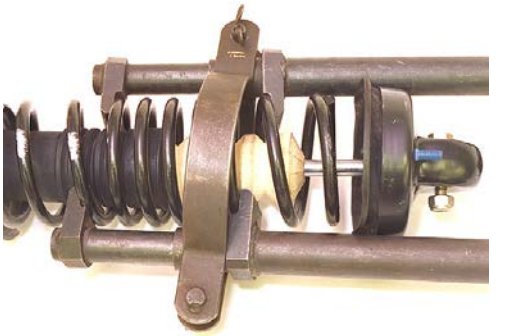

Coil spring in a compression tool

Read the previous section again and note down some key bullet points here:

-
-
-
-
-

Tools and Equipment

Introduction Components will usually be removed, inspected and repaired or replaced when a defect has been diagnosed. Other components are replaced, or stripped and cleaned, at scheduled mileage or time intervals. Refer to the Routine Maintenance section for details on these items.

Quality tools and equipment

Recommended Procedures The descriptions provided in this section deal with the components for individual replacement, rather than as a part of other work. Always refer to a workshop manual before starting work. You will also need to look for the recommended procedure, special tools, materials, tightening sequences and torque settings. Some general and specific tools and pieces of equipment are described on the following screens.

Refer to the latest data

General Toolkit General tools and equipment will be required for most tasks. As your career progresses you will build a collection of tools and equipment.

Snap-on tools[6]

Torque Wrench A good torque wrench is an essential piece of equipment. Many types are available but all work on a similar principle. Most are set by adjusting a screwed cylinder, which forms part of the handle. An important point to remember is that, as with any measuring tool, regular calibration is essential to ensure accuracy.

A torque wrench is a useful tool[6]

Air Guns The whole point of power tools is that they do the work so you don't have to! Most air guns have an aluminum housing. This material is lightweight and has a long life. Air guns produce a "hammer" action. Because of this, impact sockets should be used. Normal sockets can shatter under this load. It is important to remember that air tools need lubricating from time to time.

Wheel gun[6]

Jacks and Stands Most jacks are simple hydraulic devices. Remember to make sure the safe working load (SWL) is not exceeded. Ensure that any faults with equipment such as this are reported immediately. Axle stands must always be placed under the vehicle supporting the weight – before work is carried out.

Always use stands…[6]

After jacking a vehicle[6]

Ramps and Hoists Many ramps are available, ranging from large four-post wheel-free types to smaller single-post lifts. These large items should be inspected regularly to ensure they are safe.

Four post lift in use

Two post lift in use

Air Ratchet These tools are very useful for removing or tightening nuts and bolts. However, it is possible to over tighten if you are not careful. Air tools can be very powerful and will catch your hands! Take adequate precautions at all times.

These tools are very useful[6]

Pipe Clamp A pipe clamp is used to block a pipe for during certain tests or repairs. For example, on a braking system, it can be used to prevent the fluid from leaking when cylinders are replaced. Alternatively, the source of spongy brakes can be narrowed down. This is done by clamping each flexible pipe – one at a time –and pressing the pedal. However, some manufacturers do not recommend these tools because the pipe can be damaged.

Only use recommended types

Pressure Bleeder This equipment forces fluid through the reservoir under pressure. The tank is in two parts, which are separated by a diaphragm. The top of the tank is filled with new brake fluid, and the lower part pressurized with compressed air. Using suitable adapters, the outlet pipe, from the fluid section, is connected to the master cylinder reservoir. A valve is opened and fluid is force out of the slave cylinders as the bleed nipples are opened. Fluid is collected in a container using a simple rubber pipe, just like when bleeding the system manually.

This equipment forces fluid through the reservoir[6]

Honing Tool A honing tool is sometimes called a "glaze buster." It is used to grind the inside of a cylinder to a good, final finish. This can be done to an engine cylinder or a much smaller hydraulic brake cylinder. The tool is usually mounted in an air drill as the power source. Lubrication should be used when the equipment is operated.

Engine cylinder honing tool

Brake cylinder honing tool[6]

Brake Adjusting Tools On many earlier braking systems, the adjustment (gap between the shoe and drum) had to be adjusted manually during a service. Most modern systems do this automatically. However, many earlier systems are still in use, so tools such as these, which are used to rotate a gear inside the drum, will be very useful. Some are made to suit particular manufacturers' systems.

These tools are simple levers[6]

Test Equipment

Introduction Some special test equipment is used when working with different systems. Remember, you should always refer to the manufacturer's instructions for the equipment you are using.

Refer to manufacturers' instructions

Brake Fluid Tester Because brake fluid can absorb a small amount of water, it must be replaced or tested regularly. It becomes dangerous if the water turns into steam inside the cylinders or pipes, causing the brakes to become ineffective. The tester measures the moisture content of the fluid.

Dial Test Gauge A dial test gauge or dial test indicator (DTI) is a useful piece of measuring equipment. It is usually used in conjunction with a magnetic stand. As the plunger is moved, the dial (via a series of accurate gears) indicates the distance traveled. The graduations are either hundredths of a millimeter or thousandths of an inch. This instrument is ideal for measuring brake-disc run-out.

DTI

DTI and stand

Vacuum Gauge and Pump A vacuum gauge and pump are used to test any part of a system that requires proper sealing, pressure or vacuum to operate. The pump can be used to apply a vacuum or a pressure. The gauge reads accordingly.

Gauge and pump kit[6]

Micrometer A metric micrometer is a measuring instrument designed to measure to an accuracy of 0.01mm. Its principle of operation is quite simple: a very accurately manufactured screw thread is used with a pitch of 0.5mm. This means that as it is rotated, one complete turn will move it 0.5mm. A main scale is marked on the micrometer in 0.5mm intervals. A rotating scale marked from 0 to 50 is used to give the required accuracy. It is ideal for measuring brake disc thickness.

Caliper and micrometer kit[6]

Brake Roller Tester This test equipment is used as part of an annual test. The front or rear wheels are driven into a pair of double rollers. The rollers drive each wheel of the car, and as the brakes are applied, the braking force affects the rotation. A measure of braking efficiency can then be worked out. The required braking efficiency is usually 50 percent for the first line brakes, 25 percent for second line brakes and 16 percent for the parking brake. On modern vehicles, half of the main system is the second line, because dual lines are used. Older vehicles had to use the parking brake as the second line; therefore, it had to work at 25 percent.

Accuracy To ensure measuring equipment remains accurate, there are just two simple guidelines:

Handle the kit with care. Test equipment thrown on the floor will not be accurate.

Ensure instruments are calibrated regularly. This means checking them against equipment known to be in good working order.

Keep equipment in its box when not in use[6]6

Customer Care

Regular Checks Regular servicing is vital for a customer's safety. Carry out checks at all services and report your findings to the customer. Advise customers if anything will need attention before the next scheduled service interval.

Explain any unusual conditions

Vehicle Condition Respect your customer's vehicle and take precautions to keep it clean. Repairing or checking some systems is likely to involve you working under the vehicle and then sitting in the driver's seat. Use seat covers and ensure the steering wheel is clean when you have finished.

Seat covers in use

Driving Style Your customers may comment that their brake linings have worn out more quickly than they should. This could be due to a mechanical fault such as incorrect adjustment, so check carefully. However, it is possible that driving style is to blame – you may need to mention this tactfully!

Braking In Reverse On some vehicles, brakes are not as efficient when backing up as they are when driving forwards. This is because some systems use twin-leading shoes on the front. In the forward direction, both shoes have a self-servo action. However, when backing, both shoes have just the opposite and do not work efficiently. This is an issue only on older vehicles, but it may be necessary to explain it to some customers.

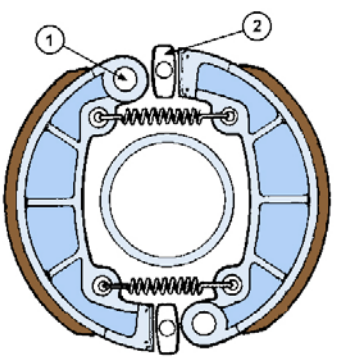

Twin leading brake shoes

Upgraded Brakes Upgraded braking components are available for fitting in the aftermarket or for performance applications. The materials used are very efficient, often very expensive, and can wear out quickly. Make your customers aware of this if they ask!

High performance pads and disc[2]

Summary A customer who is kept informed and treated with respect will return and keep you in a job! Explain things to a customer when asked – it will be appreciated. Look after their vehicle as if it were your own.

A happy customer will return

Read the previous section again and note down some key bullet points here:

-
-
-
-
-

Theory and technology

Introduction

Energy Conversion The main purpose of the braking system is simple: it is to slow down or stop a vehicle. To do this, the energy in the vehicle movement must be taken away or converted. This is achieved by creating friction. The resulting heat takes energy away from the movement. In other words, kinetic energy is converted into heat energy.

Sketch the car suspension position before and after braking

Vehicle Brakes The main braking system of a car works by hydraulics. This means that when the driver presses the brake pedal, liquid pressure forces pistons to apply brakes on each wheel. Disc brakes are used on the front wheels of some cars and on all wheels of sports and performance cars. Braking pressure forces brake pads against both sides of a steel disc. Drum brakes are fitted on the rear wheels of some cars and on all wheels of older vehicles. Braking pressure forces shoes to expand outwards into contact with a drum. The important part of brake pads and shoes is the friction lining.

Conventional braking system[1]

Brake Pads Brake pads are steel-backed blocks of friction material, which are pressed onto both sides of the disc. Older types were asbestos-based, so you must not inhale the dust. Follow manufacturers' recommended procedures. Pads should be changed when the friction material wears down to 2 or 3 mm. The circular steel disc rotates with the wheel. Some are solid but many have ventilation holes.

There are…

Many types of…

Brake pads…

In common use

Brake Shoes Brake shoes are steel crescent shapes with a friction material lining. They are pressed inside a steel drum, which rotates with the wheel. The rotating action of the brake drum tends to pull one brake shoe harder into contact. This is known as self-servo action. It occurs on the brake shoe, which is after the wheel cylinder, in the direction of wheel rotation. This brake shoe is described as the leading shoe. The brake shoe before the wheel cylinder in the direction of wheel rotation is described as the trailing shoe.

There are…

Many types of…

Brake shoes…

In common use

Hydraulic Cylinders The master cylinder piston is moved by the brake pedal. In its basic form, it is like a pump, which forces brake fluid through the pipes. Pressure in the pipes causes a small movement to operate either brake shoes or pads. The wheel cylinders work like a pump, only in reverse.

Tandem master cylinder

Brake Servo The brake servo increases the force applied by the driver on the pedal. It makes the brakes more effective. Vacuum, from the engine inlet manifold, is used to work most brake servos.

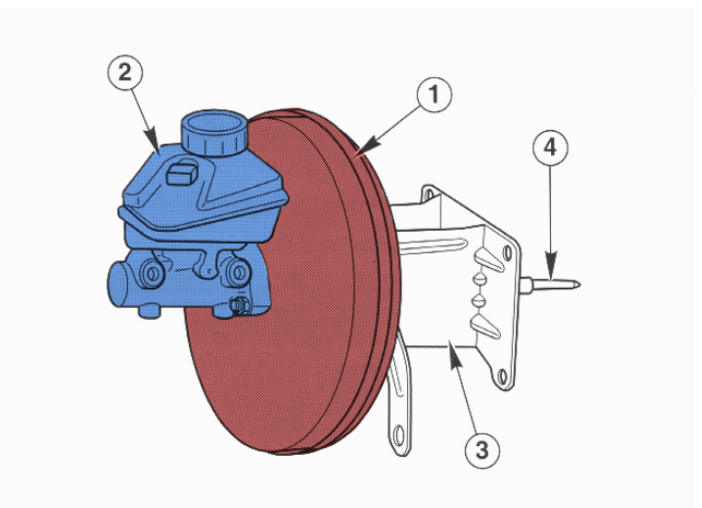

Servo unit[1]

Brake Pipes Strong, high quality pipes are used to connect the master cylinder to the wheel cylinders. Fluid connection, from the vehicle body to the wheels, has to be through flexible pipes to allow suspension and steering movement. As a safety precaution (because brakes are quite important), brake systems are split into two sections. If one section fails – say by a pipe breaks – the other will continue to operate.

Metal pipes

Flexible pipes

Antilock Brake System If the brakes cause the wheels to lock and make them skid, steering control is lost. In addition, the brakes will not stop the car as quickly. Antilock break systems use electronic control to prevent this from happening.

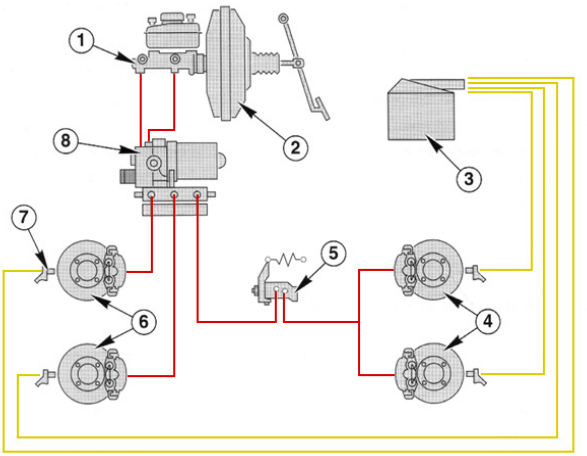

ABS[1]

Load Compensation On most car braking systems, about 70 percent (or more) of the braking force is directed to the front wheels. This is because, under braking, the weight of the vehicle transfers to the front wheels. Load compensation, however, allows the braking pressure to the rear wheels to increase as load in the vehicle increases.

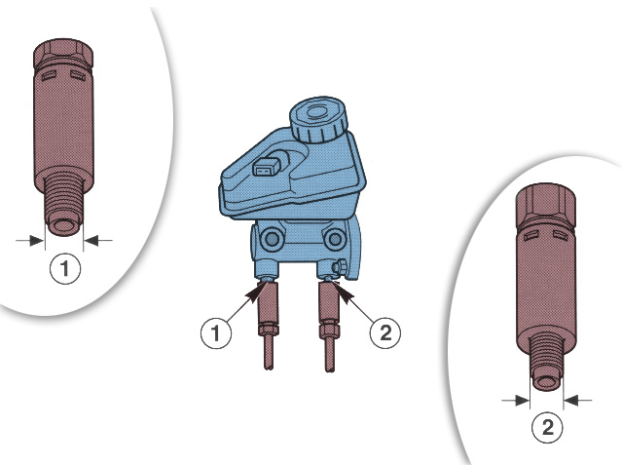

Pressure conscious regulator[1]

Brake Fade If brakes become so hot that they cannot convert energy fast enough, they become much less efficient. This is described as brake fade. A more serious form of brake fade can also be caused if the heat generated is enough to melt the bonding resin in the friction material. This reduces the frictional value of the linings or pads.

Normal braking

Annual Test Requirements All components of the braking system must be in good working order, in line with most other vehicle systems. Braking efficiency means the braking force compared to the weight of the vehicle. For example, the brakes on a vehicle with a weight of 10 kN (1000 kg x 10 ms^{-2} [g]) will provide a braking force of, say, 7 kN. This is said to be 70 percent efficiency. During an annual test, this is measured on brake rollers. The current efficiency requirements are typically as follows:

Service brake efficiency - 50 percent

Second line brake efficiency - 25 percent

Parking brake efficiency - 16 percent

Describe what is meant by brake fade.

Sketch the basic layout of a hydraulic brake system.

Read the previous section again and note down some key bullet points here:

-
-
-
-
-

Disc, Drum and Parking Brakes

Disc Brakes The caliper shown here is known as a single acting, sliding caliper. This is because only one cylinder is used but the pads are still pressed equally on both sides of the disc by the sliding action. Disc brakes are less prone to brake fade than drum brakes. This is because they are more exposed and can get rid of heat more easily. They also throw off water better than drum brakes. Brake fade occurs when the brakes become so hot they cannot transfer any more energy – and they stop working!

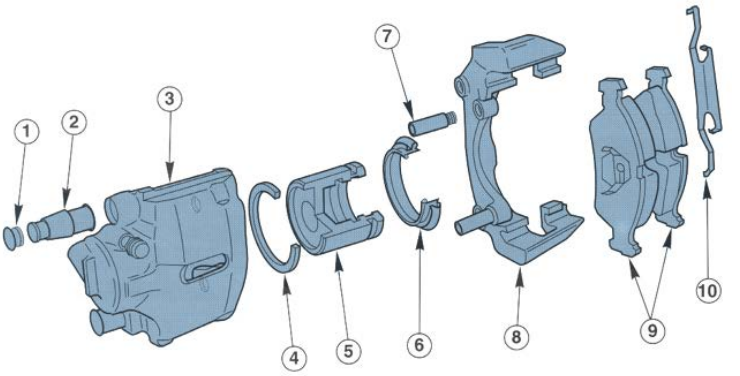

Sliding disc brake caliper components[1]

Disc Brake Adjustment Disc brakes are self-adjusting. When the pedal is depressed, the rubber seal is pre-loaded. When the pedal is released, the piston is pulled back due to the elasticity of the rubber-sealing ring.

Sliding disc brake caliper[2]

Air gap adjustment

Drum Bakes Brake shoes are mounted inside a cast iron drum. They are mounted on a steel backplate, which is rigidly fixed to a stationary part of the axle. The two curved shoes have friction material on their outer faces. One end of each shoe bears on a pivot point. The other end of each shoe is pushed out by the action of a wheel cylinder when the brake pedal is pressed. This puts the brake linings in contact with the drum inner surface. When the brake pedal is released, the return spring pulls the shoes back to their rest position.

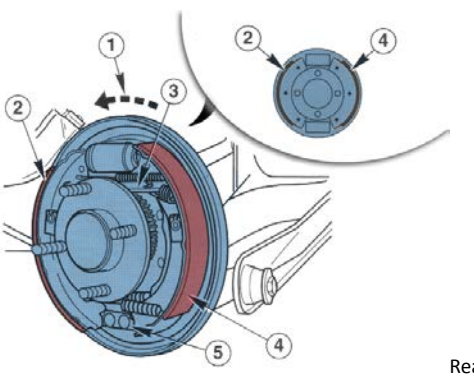

Rear drum brake[1]

Drum Brake Features Drum brakes are more adversely affected by moisture and heat than disc brakes because both water and heat are trapped inside the drum. However, they are easier to fit with a mechanical hand brake linkage.

Brake drum

Brake Adjustments Brakes must be adjusted so that minimum movement of the pedal starts to apply the brakes. The adjustment in question is the gap between the pads and disc and the shoes and drum. Disc brakes are self-adjusting because as pressure is released it moves the pads just away from the disc. Drum brakes are different because the shoes are moved away from the drum to a set position by a pull-off spring. Self-adjusting drum brakes are almost universal now on light vehicles. A common type uses an offset ratchet, which clicks to a wider position if the shoes move beyond a certain amount when operated.

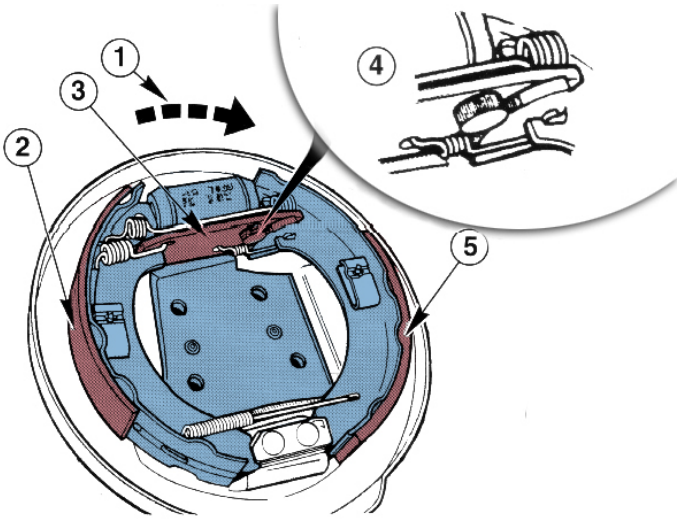

Self-adjusting device[1]

Manual Adjustment Adjustment through a hole in the back plate is often used. This involves moving a type of nut on a threaded bar, which pushes the shoes out as it is screwed along the thread. This method is similar to the automatic adjusters. An adjustment screw on the back plate is now quite an old method. A screw or square head protruding from the back plate moves the shoes by a snail cam. As a guide, tighten the adjuster until the wheels lock, and then move it back until the wheel is just released. You must ensure that the brakes are not rubbing, which would build up heat and wear the friction material very quickly.

Brake adjustment hole

Square type adjuster

Self-Servo Action The precise way in which the shoes move into contact with the drum affects the power of the brakes. If the shoes are both hinged at the same point then the system is said to have one leading and one trailing shoe. As the shoes are pushed into contact with the drum, the leading shoe is dragged by the drum rotation harder into contact, whereas the rotation tends to push the trailing shoe away. This "self-servo" action on the leading shoe can be used to increase the power of drum brakes. This is required on the front wheels of all-round drum-brake vehicles.

The leading shoe is forced into contact with the drum

Twin-Leading Shoe Brakes The shoes are arranged so that they both experience the self-servo action. The shoes are pivoted at opposite points on the backplate and two wheel cylinders are used. The arrangement is known as twin-leading shoe brakes. It is not suitable for use on the rear brakes because if the car is traveling in reverse then it would become a twin trailing shoe arrangement, which means the efficiency of the brakes would be seriously reduced. The leading and trailing layout is therefore used on rear brakes, as one shoe will always be leading no matter what direction the vehicle is moving.

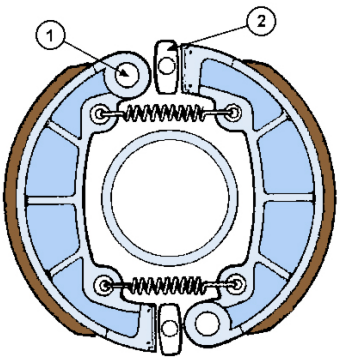

T win leading shoe system principle

Leading and Trailing Shoe Brakes The standard layout of drum brake systems is normally:

Twin-leading shoe brakes on the front wheels

Leading and trailing shoe brakes on the rear wheels.

Disc brakes are now used on the front wheels of all light vehicles but many retain leading and trailing shoe brakes on the rear. In most cases, it is easier to attach a parking break linkage to the system with shoes on the rear. This method will also provide the braking performance required when the vehicle is in reverse.

L eading and trailing system

Parking Brake Linkages Inside a brake drum, the parking break linkage is usually a lever mechanism as shown here. This lever pushes the shoes against the drum and locks the wheel. The parking brake lever pulls on one or more cables and has a ratchet to allow it to be locked into position. There are a number of ways in which the parking brake linkage can be laid out to provide equal force, or compensation, for both wheels:

Two cables, one to each wheel

Equalizer on a single cable pulling a ”U” section to balance effort through the rear cable (as shown here)

Single cable to a small linkage on the rear axle.

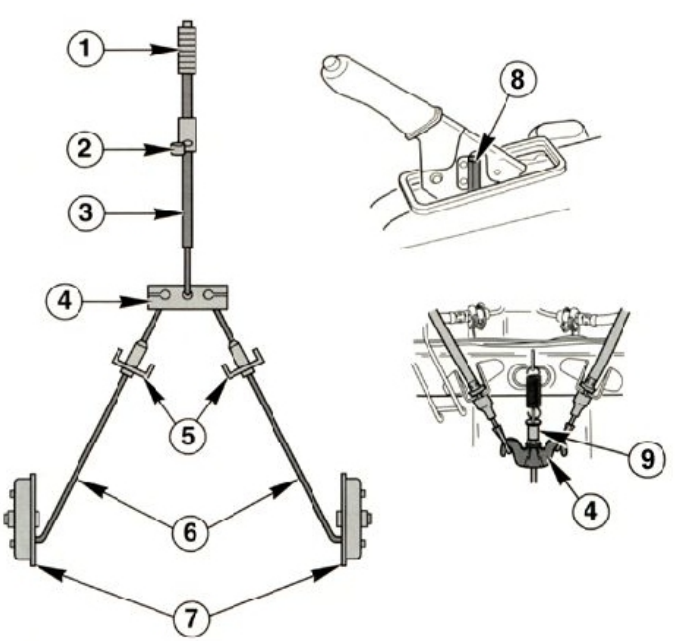

Parking brake mechanism[1]

Disc Type Parking Brake Some sliding caliper disc brakes incorporate a parking brake mechanism. The foot brake operates as normal. Parking brake operation is by a moving lever. The lever acts through a shaft and cam, which works on the adjusting screw of the piston. The piston presses one pad against the disc and, because of the sliding action, the other pad also moves.

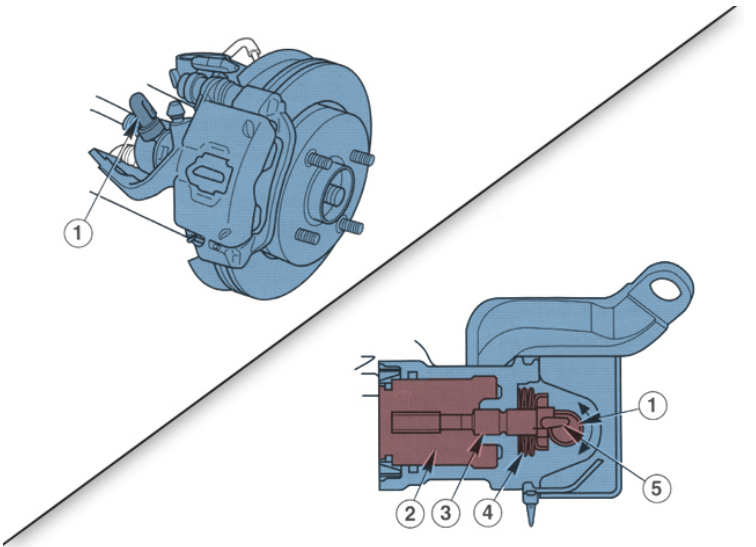

Sliding caliper parking brake[1]

Parking Brake Drum in Disc Some manufacturers use a set of small brake shoes inside a small drum, which is built into the brake disc. The caliper is operated as normal by the foot brake. The small shoes are moved by a cable and lever.

Summary In summary, remember that the purpose of the braking system is to slow or stop a vehicle. This is achieved by converting the vehicle's movement energy into heat. Friction is used to do this. Braking system developments have improved efficiency, reliability and ease of servicing.

Describe the leading/trailing layout of the shoes on drum brake systems when used front and rear.

Read the previous section again and note down some key bullet points here:

-
-
-
-
-

Hydraulic Components

Principle of Hydraulic Braking The principle of hydraulic brakes is shown here. The movement of the piston, labeled 2, causes an equal force in all parts of the system. The pistons, labeled 1, move a shorter distance. If larger area pistons are used, the force at the brakes can be increased. This is called a liquid lever and acts in addition to the leverage of the brake pedal.

Hydraulic cylinders

Braking System A complete braking system includes a master cylinder, which operates several wheel cylinders. The system is designed to give the power amplification needed for braking the particular vehicle. On any vehicle, a lot of the weight is transferred to the front wheels when braking. Most braking effort is therefore designed to work on the front brakes. Some cars have special hydraulic valves to limit rear-wheel braking. This reduces the chance of the rear wheels locking and skidding.

Simplified brake system

Wheel Cylinders Brake shoes can be moved by double or single-acting wheel cylinders. A common layout is to use one double-acting cylinder and brake shoes on each rear wheel of the vehicle, and disc brakes on the front wheels. A double-acting cylinder simply means that as fluid pressure acts through a center inlet, pistons are forced out of both ends.

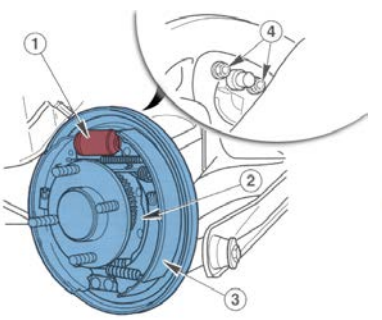

Slave cylinder in position[1]

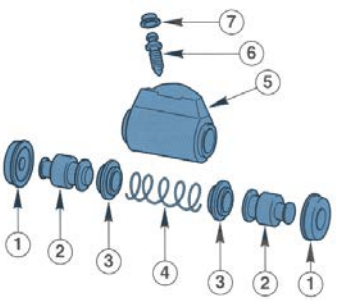

Slave cylinder components [1]

Disc Caliper Piston Disc brake calipers are known as fixed, floating or sliding types. The pistons are moved by hydraulic pressure created in the master cylinder. A number of different calipers are used. Some high-performance calipers include up to four pistons. However, the operating principle remains the same.

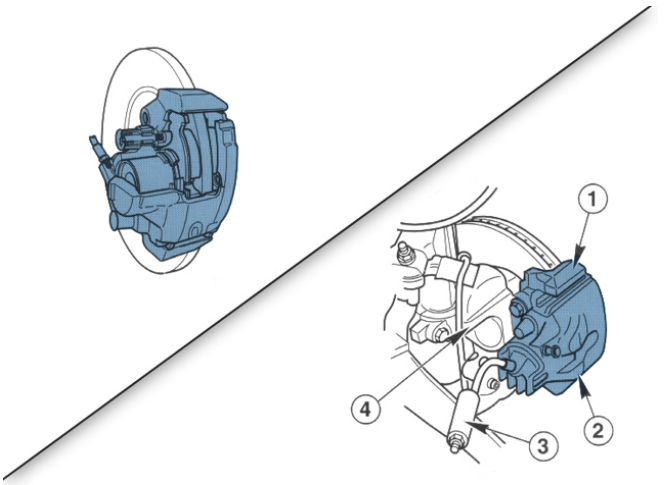

Sliding caliper[1]1

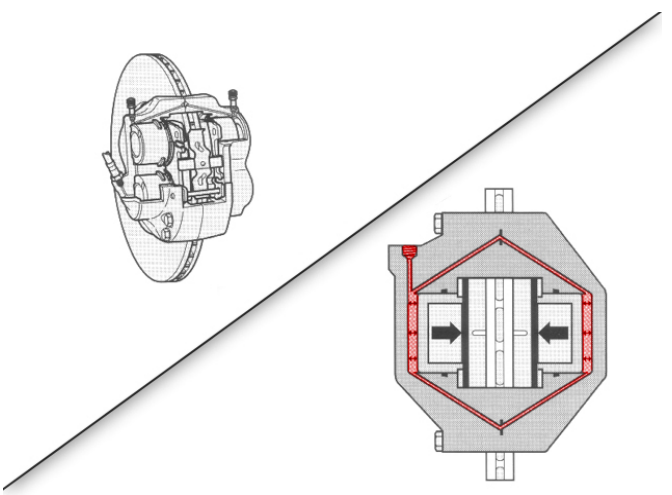
Fixed caliper[1]

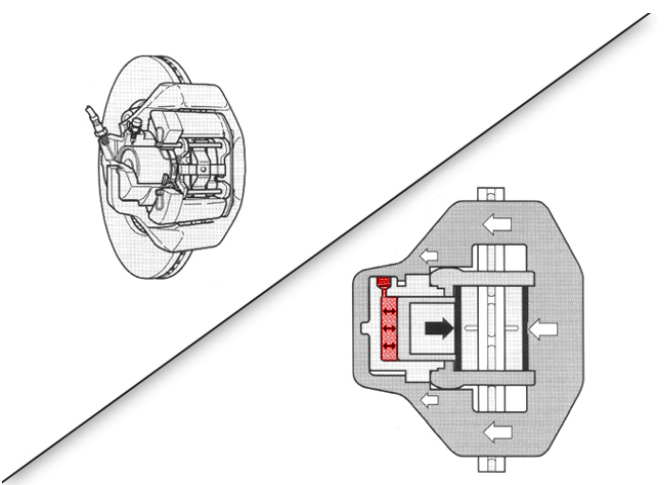
Floating caliper[1]

Brake Fluid Always use new and approved brake fluid when topping off or refilling the system. Manufacturers' recommendations must always be followed. Brake fluid is hygroscopic, which means that over time, it absorbs water. This increases the risk of the fluid boiling due to the heat from the brakes. Pockets of steam in the system would not allow full braking pressure to be applied. Many manufacturers recommend that the fluid be changed at regular intervals. Make sure the correct grade of fluid is used. The current recommended types are known as DOT4 and DOT5.

A common type of brake fluid

Brake System The main parts of a typical modern braking system are shown here. A separate mechanical system is a good safety feature. Most vehicles have the mechanical parking brake working on the rear wheels, but a few have it working on the front. Note the importance of flexible connections to allow for suspension and steering movement. These flexible pipes are made of high quality rubber and are covered in layers of strong mesh to prevent expansion when under pressure.

Braking and other system components[2]

Tandem Master Cylinder Safety is built into braking systems by using a double-acting master cylinder. This is often described as tandem and can be thought of as two master cylinders inside one housing. The pressure from the pedal acts on both cylinders, but fluid can not pass from one to the other. Each cylinder is then connected to a separate circuit. These split lines can be connected in a number of ways. Under normal operating conditions, the pressure developed in the first part of the master cylinder is transmitted to the second. This is because the fluid in the first chamber acts directly on the second piston.

Master cylinder operation – no faults

Circuit Failure If one line fails, the first piston meets no restriction and closes up to the second piston. Further movement will now provide pressure for the second circuit. The driver will notice that pedal travel increases, but some braking performance will remain. If the fluid leak is from the second circuit, then the second piston will meet no restriction and close up the gap. Braking will now be just from the first circuit. Diagonal split brakes are the most common and are used on vehicles with a negative scrub radius. Steering control is maintained under brake failure conditions.

Master cylinder operation – system faults

Multi-Circuit Systems There are three common 'splits' used on modern braking systems. The first two types listed are the most common:

Diagonal split type, where if a fault occurs, the driver loses half of the front and half of the rear brakes

Separate front and rear, where if a fault occurs, the driver loses all of the front or all of the rear brakes

Duplicated front, where if a fault occurs, the driver loses the rear and part of the front or part of the front brakes only. Special front calipers are required when using this method.

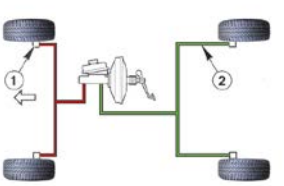

Front/rear split[1]

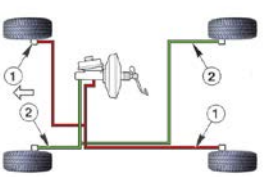

Diagonal split[1]

State the three common ‘splits’ used on modern braking systems AND advantages of each type.

Read the previous section again and note down some key bullet points here:

-
-
-
-

Brake Servo Operation

Introduction The brakes of a vehicle must perform well while keeping the effort required by the driver to a reasonable level. This is achieved by the use of a brake servo (also called a brake booster). Vacuum-operated systems are commonly used on light vehicles.

Vacuum servo/booster

Hydraulic Power Brakes Hydraulic power brakes use the pressure from an engine-driven pump. The pump will often be the same as the one used to supply the power-assisted steering. Pressure from the pump is made to act on a plunger in line with the normal master cylinder. As the driver applies force to the pedal, a servo valve opens in proportion to the force applied by the driver. The hydraulic assisting force is therefore also proportional. This maintains the all-important "driver feel'.”

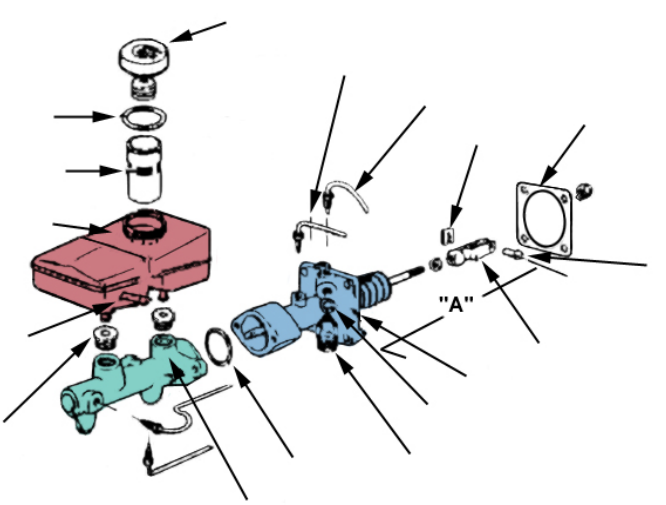

Hydraulic brake servo

Hydraulic Accumulator A hydraulic accumulator (a reservoir for fluid under pressure) is incorporated into many systems. This is because the pressure supplied by the pump varies with engine speed. The pressure in the accumulator is kept between set pressures in the region of 70 bar. A warning: If you have to disconnect any components from the braking system on a vehicle fitted with an accumulator, you must follow the manufacturer's recommendations on releasing the pressure first.

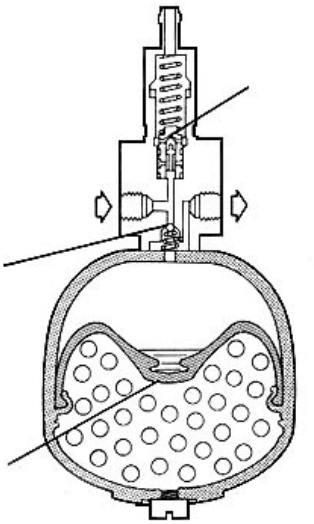

Accumulator

Vacuum Servo A common servo system uses low pressure (vacuum) from the manifold on one side, and the higher atmospheric pressure on the other side of a diaphragm. The low pressure is taken via a non-return safety valve from the engine inlet manifold. A pump is often used on diesel vehicles as most do not have a throttle butterfly and hence do not develop any significant manifold vacuum. The pressure difference, however created, causes a force, which is made to act on the master cylinder.

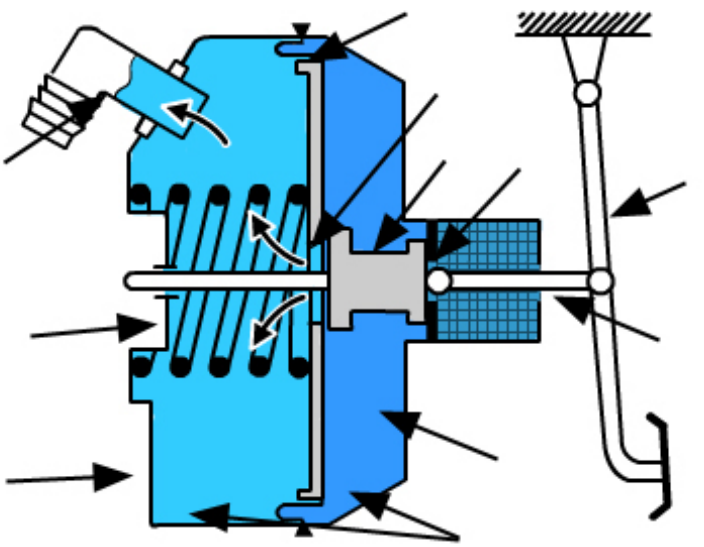

Construction[1]

Servo Operation The vacuum servo is fitted between the brake pedal and the master cylinder. The main part of the servo is the diaphragm. The larger this diaphragm, the greater the servo assistance provided. A vacuum is allowed to act on both sides of the diaphragm when the brake pedal is not in use. When pedal force is applied to the piston, a valve cuts the vacuum connection to the rear chamber and allows air at atmospheric pressure to enter. This causes a force to act on the diaphragm, assisting with the application of the brakes.

Servo Assistance Once the master cylinder piston moves, the valve closes again to hold the applied pressure. Further effort by the driver on the brake pedal will open the valve again and apply further vacuum assistance. In this way, the driver can "feel" the amount of braking effort being applied. The cycle continues until the driver effort reaches a point where the servo assistance remains fully on.

Vacuum Supply On gasoline engines, the vacuum is obtained from the inlet manifold. On diesel engines, a vacuum pump is used. A non-return valve is fitted in the line to keep vacuum in the servo chamber. This means that it is possible to carry out three or four braking operations, with servo assistance, without the engine running. The valve also prevents fuel vapors from getting in the servo and damaging the diaphragm.

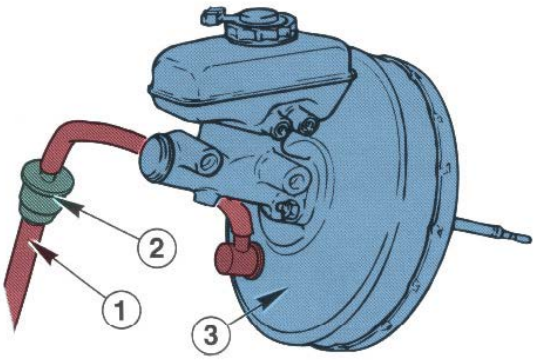

A check valve is fitted in the vacuum supply[1]

Fail-Safe Mode If the vacuum servo stops working, the brakes will still operate, but extra force will be required from the driver. The connection to the inlet manifold will normally be via a check valve as an extra safety feature.

Safety is important

Summary A brake servo assists the driver when the brakes are applied. The "feel" must be maintained during operation. Most servos are vacuum operated.

Brake servo

Explain what happens if the vacuum servo/booster stops working.

Read the previous section again and note down some key bullet points here:

-
-
-
-

Braking-Force Control

Introduction There are three main types of braking-force control device:

Load-apportioning valve

Pressure-conscious regulator

Deceleration-sensing brake-pressure reducer.

Braking- Force Distribution The purpose of these devices is to ensure braking force is distributed so that most of the force goes to the front brakes. This improves performance and stability.

Pressure conscious regulator

Load apportioning valve

Load Apportioning Load-apportioning valves are fitted between the rear axle and vehicle floor assembly. A single valve is used for vehicles with front-to-rear split lines, and two valves are used when the split is diagonal.

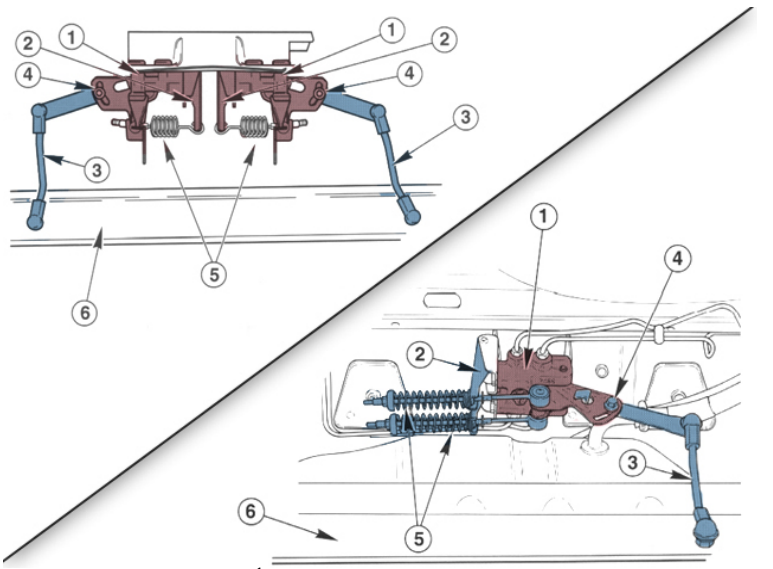

Separate and combined units[1]

Valve Operation A lever and tension spring changes the force necessary to make a plunger move. The lever and spring adjust position depending on the vehicle load. Fluid pressure moves the plunger. However, the position of the lever limits the movement. Load in the vehicle sets the valve position. Pressure, and therefore braking force, is controlled by the valve.

Apportioning valve operation

Pressure-Conscious Regulator The pressure-conscious regulator is simply fitted in the line, or lines, to the rear brakes. It reduces braking pressure by a fixed amount. An internal control spring is used to set the operating pressure.

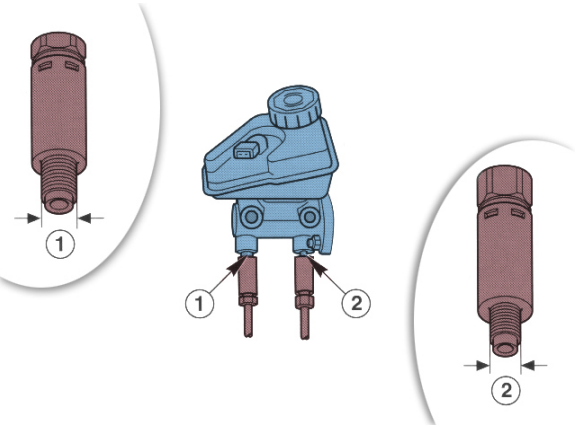

Valve Movement The key component is the valve labeled No. 2. This valve is held on its seat by the spring. At the start of braking operation, fluid can pass the valve as shown by the arrows.

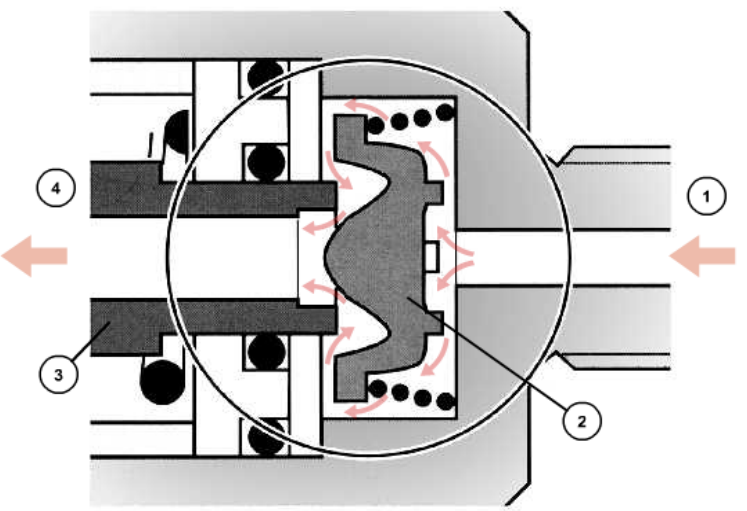

Valve movement

Regulator Operation When the control pressure is reached, the "control piston" moves against the spring. This closes the passage between the valve seat and the control piston. A further increase in pressure causes a continuous opening and closing of the valve.

Deceleration-Sensing One deceleration sensor is used in each brake circuit. The sensors are mounted on the vehicle floor at a set angle to the horizontal. When the deceleration is greater than about 0.5g, the valves allow the pressure to the rear brakes to rise more slowly than the front.

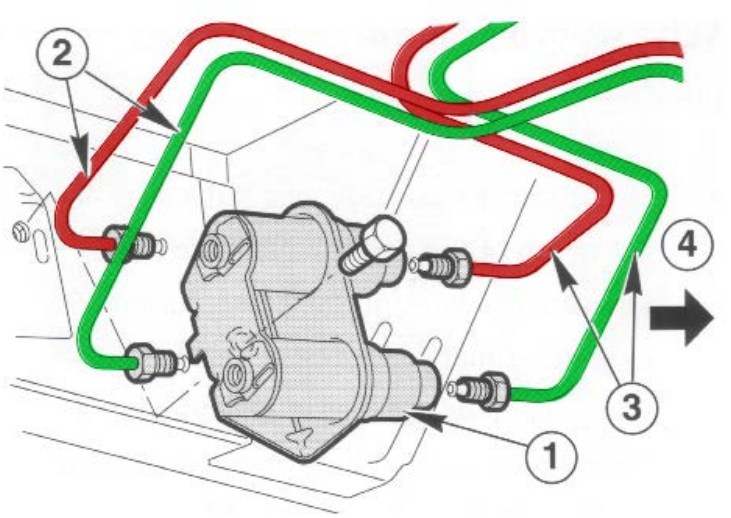

Pressure reducer location[1]

Sensor Operation When the brakes are applied, fluid is forced through the inlet (2), past the washer (3) and ball (4), through the piston chamber (8) and finally to the outlet (6). At the triggering point of about 0.5g, the ball moves on the angled surface, and closes off the piston bore. This reduces the pressure to the rear brakes. When deceleration reduces, the ball rolls back against the washer.

Summary Controlling brake pressure ensures braking force is distributed so that most of the force goes to the front brakes. As a guide, more than 70 percent of the braking takes place on the front wheels. This improves performance, control and stability.

Note how the car front 'dives' on hard braking

State approximately, how much braking force is distributed to the front brakes AND explain why.

Read the previous section again and note down some key bullet points here:

-
-
-
-
-

Rear Wheel Drive Bearings

Types of Bearing There are two main types of bearings used in rear-wheel hubs. These are ball bearings and roller (or tapered roller) bearings.

Ball bearing

Roller bearing

Rear-Wheel Bearings Axle shafts transmit drive from the differential to the rear-wheel hubs. An axle shaft has to withstand:

Torsional stress due to driving and braking forces

Shear and bending stress due to the weight of the vehicle

Tensile and compressive stress due to turning forces

A number of bearing layouts are used – depending on application – to handle these stresses.

Semi Floating Shown here is a typical axle mounting used on many rear-wheel drive cars. A single bearing is used, which is mounted in the axle casing. With this design, the axle shaft has to withstand all of the operating forces. The shaft is therefore strengthened and designed to do this. An oil seal is incorporated because oil from the final drive can work its way along the shaft. The seal prevents the brakes from being contaminated.

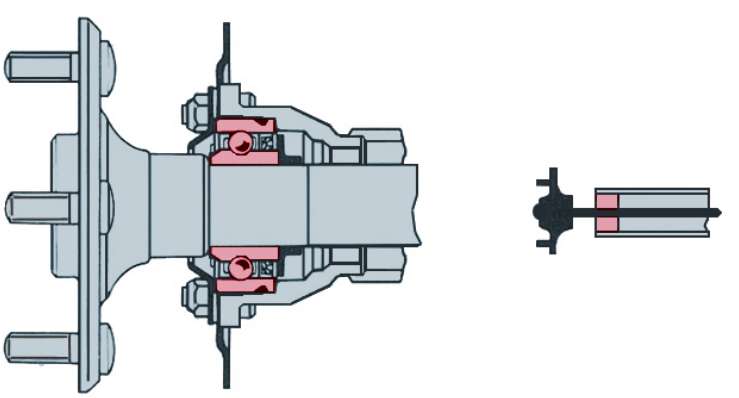

Wheel bearing – Semi floating

Three-Quarter Floating The three-quarter floating bearing shown here reduces the main shear stresses on the axle shaft, but the other stresses remain. The bearing is mounted on the outside of the axle tube. An oil seal is included to prevent the brake linings from being contaminated.

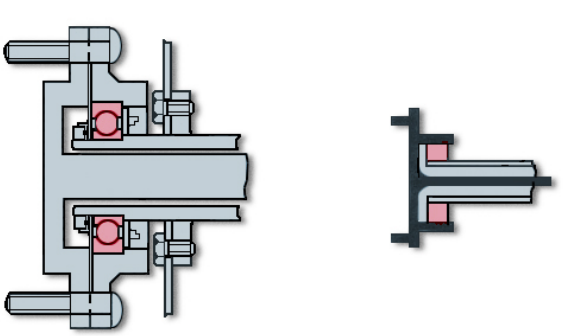

Wheel bearing – Three Quarter floating

Fully Floating Fully floating systems are generally used on heavy, or off-road vehicles. This is because the stresses on these applications are greater. Two widely spaced bearings are used, which take all of the loads, other than torque, off of the axle shaft. Bolts or studs are used to connect the shaft to the wheel hub. When these are removed, the shaft can be taken out without jacking up the vehicle.

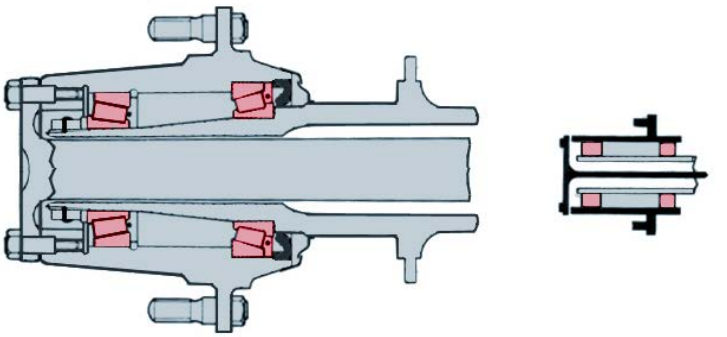

Wheel bearing – Fully floating

Front-Wheel Bearings Front hubs on rear-wheel drive cars consist of two bearings. These are either ball or tapered roller types. The roller types are generally used on earlier vehicles. They have to be adjusted by tightening the hub nut and then backing it off by about half a turn. The more modern hub bearings, known as contact-type ball races, do not need adjusting. This is because the hub nut tightens against a rigid spacer. This nut must always be set at a torque specified by the manufacturer.

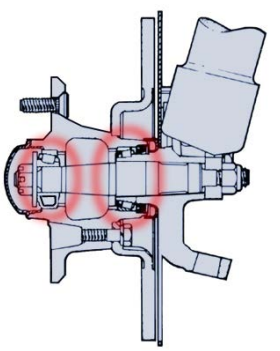

Front hub with tapered roller bearings

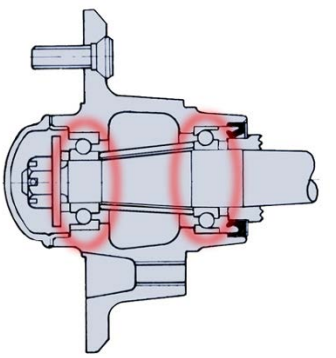

Front hub with ball bearings

Summary The most common systems for rear-wheel drive cars are semi-floating rear bearings at the rear, and twin ball bearings at the front. The front bearings are designed to withstand side forces as well as vertical loads.

Rear hub

Front hub

Read the previous section again and note down some key bullet points here:

-
-
-
-
-

Front Wheel Drive Bearings

Introduction Wheel bearings must allow smooth rotation of the wheels but also be able to withstand high stresses such as those generated when turning. Front-wheel drive arrangements must also allow the drive to be transmitted via the driveshafts.

Front Bearings The front hub works as an attachment for the suspension and steering as well as for supporting the bearings. It supports the weight of the vehicle at the front, when still or moving. Ball or roller bearings are used for most vehicles with specially shaped tracks. This is so the bearings can withstand side loads when turning. The bearings support the driveshaft as well as the hub.

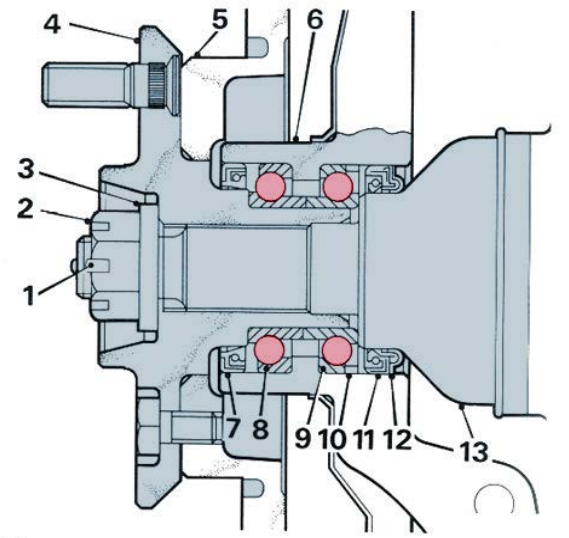

Front hub and bearings

Rear Bearings The stub axle, which is solid-mounted to the suspension arm, fits in the center of two bearings. The axle supports the weight of the vehicle at the rear, when still or moving. Ball bearings are used for most vehicles with specially shaped tracks for the balls. This is so the bearings can stand side loads when turning. A spacer is used to ensure the correct distance between, and pressure on, the two bearings.

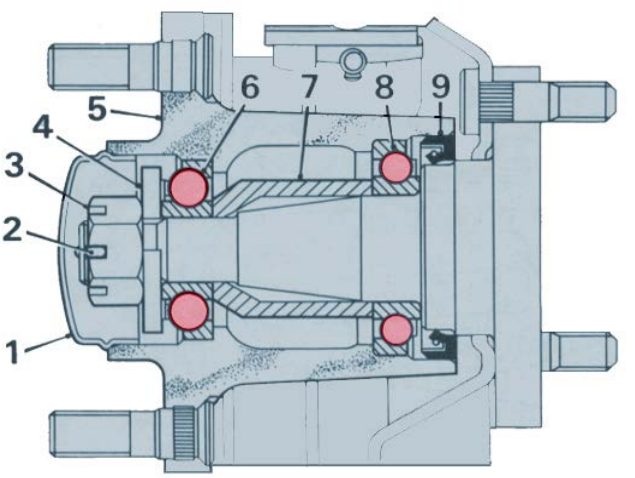

Rear hub and bearings

Summary The hub and bearing arrangement on the front of a front-wheel drive car must bear weight, withstand driving forces and support the driveshaft. The rear hub and bearings must support the vehicle and withstand side forces.

Rear hub

Front hub

Describe the function of front wheel hub.

Read the previous section again and note down some key bullet points here:

-
-
-
-
-

Stoplights and Reverse Lights

Introduction Brake lights are used to warn drivers behind that you are slowing down or stopping. Reverse lights warn other drivers that you are reversing, or intend to reverse. The circuits are quite simple. One switch in each case operates two or three bulbs. A relay may be used.

Stop and reverse lights form part of the rear light cluster

Brake lights and Reverse Lights The circuits for these two systems are similar. Shown here is a typical brake light or reverse light circuit. Most incorporate a relay to switch on the lights, which is in turn operated by a spring-loaded switch on the brake pedal or gearbox. Links from the brake light circuit to the cruise control system may be found. This causes the cruise control to switch off as the brakes are operated. A link may also be made to the antilock brake system.

Simple circuit

Switches The circuits are operated by the appropriate switch. The reverse switch is part of the gearbox or gear change linkage. The brake switch is usually fitted so it acts on the brake pedal.

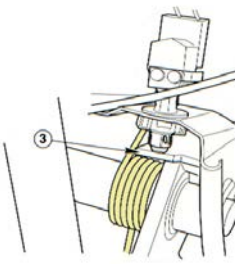

Stoplight switch[1]

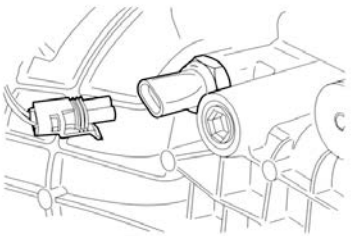

Reverse light switch[1]

A Real Lighting Circuit 💻 The diagram shown is the complete lighting circuit of a vehicle. The color codes used are discussed in Learning Program 17. However, you can follow the circuit by looking for the labels on the wires. 'N' for example, means 'Brown,' but this has no effect on how it works! Operation of part of this circuit is described over the following screens.

Reverse Lights 💻 The ignition must be on for these lights to operate. The reverse light switch gets its feed from fuse 16 on the GY wire. When the switch is operated, the supply is sent to the rear lamps on a GN wire. The switch is usually mounted on the gear change linkage or screwed into the gearbox.

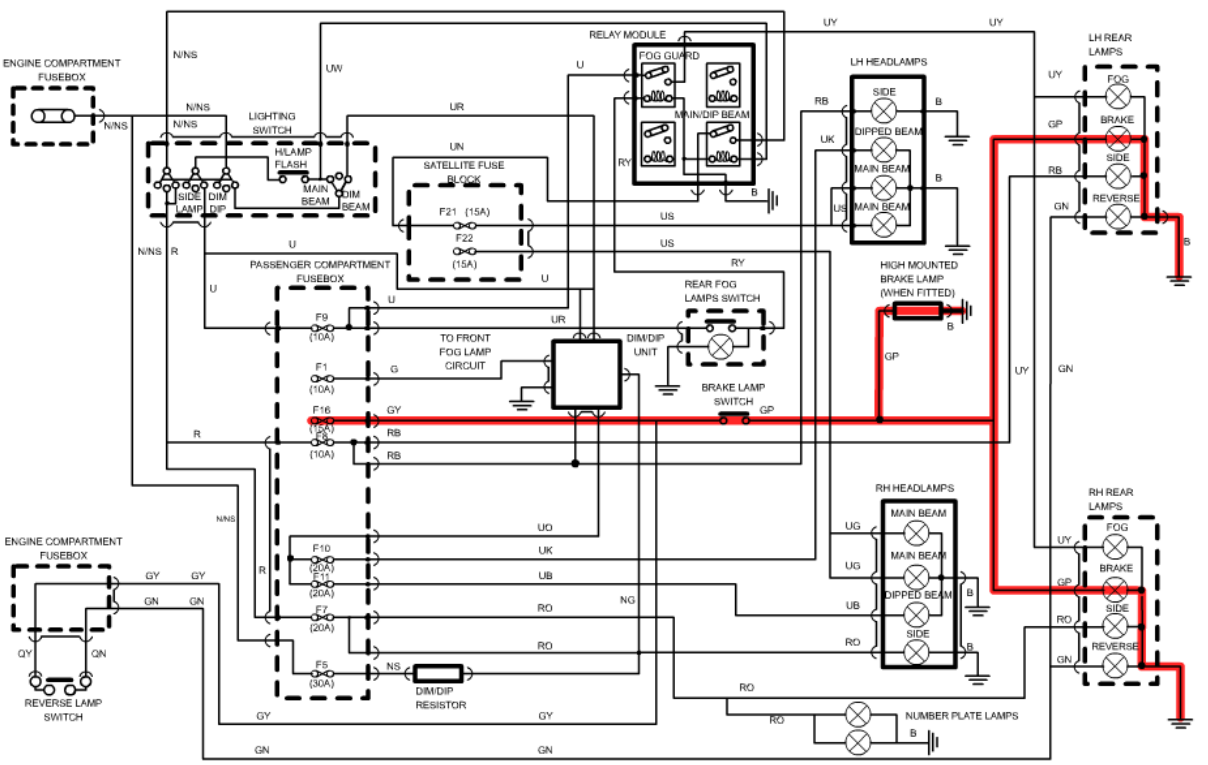

S

toplight circuit

Brake lights The ignition must be on for these lights to operate. The brake light switch gets its feed from fuse 16 on the GY wire. When the switch is operated, the supply is sent to the rear lamps on a GP wire. A connection is also made to the center high mounted brake light. The switch is usually mounted on the pedal box above the brake pedal.

Light Emitting Diodes Light emitting diodes (LEDs) are more expensive than bulbs. However, the potential savings in design costs due to long life, sealed units being used and greater freedom of design, could out weigh the extra expense. LEDs are ideal for brake lights.

Enhanced Safety A further advantage is that they illuminate faster than ordinary bulbs. The time difference is between 130mS for the LEDs, and 200mS for bulbs. Related to a vehicle brake light at highway speeds, the increased reaction time equals about a car length. This could make a major contribution to road safety.

Center High Mounted Stop Lights An LED center high mounted stop light (CHMSL) illuminates faster than conventional incandescent lamps, improving driver response time and providing extra braking distance. Due to their low height and reduced depth, LED CHMSLs can be easily incorporated with all vehicle designs. They can be mounted inside or integrated into the exterior body or spoiler.

CHMSL

Summary Reverse lights are operated by a simple on/off gearbox switch. Brake lights are operated by a simple on/off switch on the pedal box. Both circuits operate in much the same way. High mounted brake lights are now quite common, and many of these use LEDs.

State TWO advantages of an LED center high mounted stop lamp (CHMSL).

Make a sketch to show a brake light circuit using a relay.

Read the previous section again and note down some key bullet points here:

-
-
-
-
-

Antilock Brake Systems

Introduction The anti-lock braking system (ABS) was developed for one simple reason: Under braking conditions, if one or more of the vehicle wheels locks (begins to skid) then serious consequences results. These are:

S
ystems under development[4]

Braking distance increases

Steering control is lost

Tire wear is abnormal.

Braking Efficiency The maximum deceleration of a vehicle is achieved when maximum energy conversion is taking place in the brake system. This is the conversion of kinetic energy to heat energy at the discs and brake drums. The potential for this conversion process between a tire skidding, even on a dry road, is far less. A good driver can pump the brakes on and off to prevent locking, but electronic control can achieve even better results.

Braking without ABS

Steering Control ABS is becoming more common on lower-price vehicles, which should contribute to safety. It is important to remember, however, that for normal use, the system is not intended to allow faster driving and shorter braking distances. It should be viewed as operating in an emergency only. Good steering and road holding must continue when the ABS system is operating. This is arguably the key issue because being able to swerve round a hazard while still braking hard is often the best course of action.

Fail Safe Mode If the ABS fails then conventional brakes must still operate to their full potential. In addition, a warning must be given to the driver. This is normally in the form of a simple warning light.

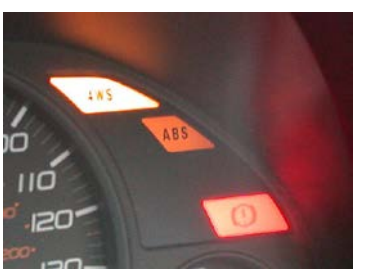

ABS warning light

Brake disc[2]

Speed Range of Operation The system must operate under all speed conditions above walking pace. At this very slow speed, even when the wheels lock, the vehicle will stop quickly. If the wheels did not lock then, in theory, the vehicle would never stop!

Other Operating Conditions ABS must be able to recognize hydroplaning and react accordingly. It must also operate on an uneven road surface. The one operating condition still not perfected is braking at slow speeds while on snow. The ABS can actually increase stopping distance in snow. However, steering control will be maintained, and this is considered a suitable trade off.

Wet conditions[1]

Rough conditions

Dry conditions[2]

Snow conditions[4]

General System Description ABS can be considered as a central control unit with a series of inputs and outputs. An ABS system is represented by the closed-loop system block diagram shown here. The most important of the inputs are the wheel-speed sensors. The main output is some form of brake-system pressure control. The task of the electronic control unit (ECU) is to compare signals from each wheel sensor. From these signals, it can determine the acceleration or deceleration of an individual wheel. Brake pressure can be reduced, held constant or allowed to increase. The maximum pressure is determined by the driver's pressure on the brake pedal.

Antilock brake system

Wheel Acceleration or Deceleration A vehicle reference speed is determined from the combination of two diagonal wheel-sensor signals. After the start of braking, the ECU uses this value as its reference. The acceleration and deceleration values are live measurements, which are constantly changing.

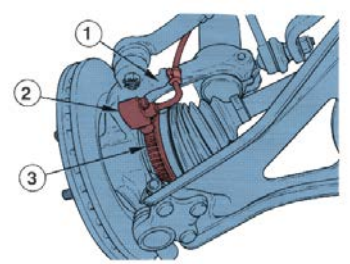

Front wheel sensor[1]

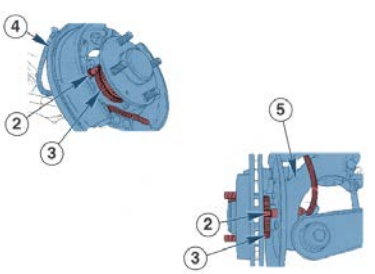

Rear wheel sensor[1]

Brake Slip Although brake slip cannot be measured directly, a value can be calculated from the vehicle reference speed. This figure is then used to determine if, and when, ABS should take control of the brake pressure.

ABS control ranges

ABS Components There are variations between manufacturers involving a number of different components. However, for the majority of systems, there are three main components:

Wheel-speed sensors

Electronic control unit

Hydraulic modulator.

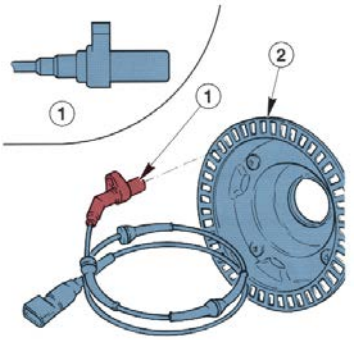

Speed sensor[1]

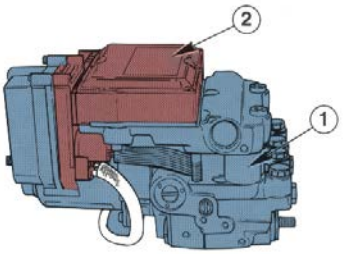

Modulator[1]

Wheel-Speed Sensors Most of these devices are inductance sensors and work in conjunction with a toothed wheel. They consist of a permanent magnet and a soft iron rod around which is wound a coil of wire. As the toothed wheel rotates, the changes in inductance of the magnetic circuit generate a signal. The frequency and voltage of the signal are proportional to wheel speed. The frequency is the signal used by the electronic control unit.

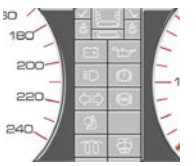

Warning lights

ECU[1]

Hall Effect Sensors Some systems now use Hall effect sensors. The Hall sensors are more accurate at lower speed. The main parts of the sensor are a magnet and an integrated circuit containing the sensing element.

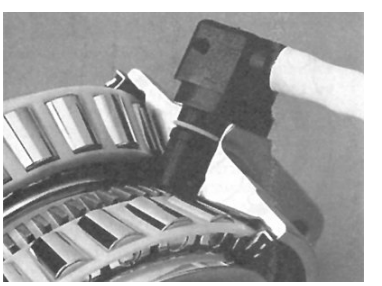
Hall effect sensor

Electronic Control Unit The ECU takes in information from the wheel sensors and calculates the best course of action for the hydraulic modulator. At the heart of an ABS ECU are two microprocessors, which run the same program independently of each other. This ensures greater security against any fault, which could adversely affect braking performance. If a fault is detected, the ABS disconnects itself and operates a warning light. Both processors have non-volatile memory into which fault codes can be written for later service and diagnostic access. The ECU performs a self-test after the ignition is switched on. A failure results in disconnection of the system.

ECU

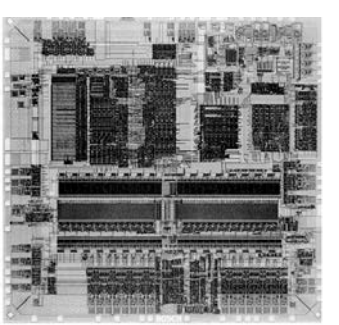
Internal circuit[4]

Hydraulic Modulator The hydraulic modulator has three operating positions:

Pressure release, where the brake line is open to the reservoir

Pressure holding, where the brake line is closed

Pressure build-up, where the brake line is open to the pump.

The valves are controlled by electrical solenoids, which react very quickly.

Principle of brake pressure control

Brake Pressure Control The start of ABS engagement is known as “first control cycle smoothing.” This smoothing stage is necessary to prevent reactions to minor disturbances such as an uneven road surface, which can cause changes in the wheel-sensor signals. The threshold of engagement is critical. If it started too soon, it would be distracting to the driver and cause unnecessary component wear. If too late, steering and stability could be lost on the first control cycle.

Vehicle Yaw When braking on a road surface with different adhesion under the left and right wheels, the vehicle will yaw or start to twist. The driver can control this with the steering, if time is available. This can be achieved if, when the front wheel with poor adhesion becomes unstable, the pressure to the other front wheel is reduced. This acts to reduce the vehicle yaw, which is particularly important when the vehicle is turning.

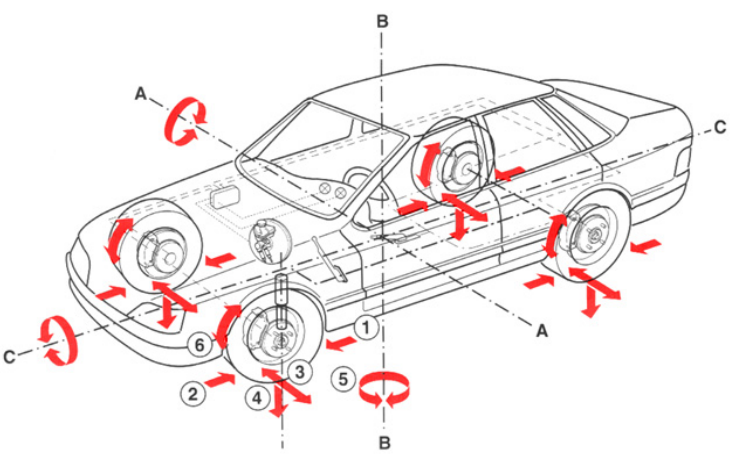

Forces acting on a vehicle[1]

Axle Vibration Wheel-speed instability occurs frequently and at random because of axle vibration on rough roads. Due to this instability, brake pressure tends to be reduced more than it is increased, during ABS operation. This could lead to loss of braking under certain conditions. A slight delay in the reaction of the ABS due to delay in signal smoothing, the time taken to move control valves and a time lag in the brake lines all help to reduce the effect of axle vibration.

Control Strategy The control strategy of the antilock brake system can be summarized as follows:

Rapid brake-pressure reduction during wheel-speed instability. The wheel will, therefore, re-accelerate without too much pressure reduction and avoid under-braking

Rapid rise in brake pressure during and after a re-acceleration to a value just less than the instability pressure

Discreet increase in brake pressure in the event of increased adhesion

Sensitivity suited to the prevalent conditions

Antilock braking is not initiated during axle vibration.

Two valves can control brake pressure

Control Summary The application of these five main requirements leads to the need for compromise. Optimum programming and prototype testing can reduce the level of compromise, but some disadvantages have to be accepted. The best example of this is braking on uneven ground in deep snow, because deceleration is less effective unless the wheels are locked up. In this example, priority is given to stability rather than stopping distance, as directional control is favored under these circumstances.

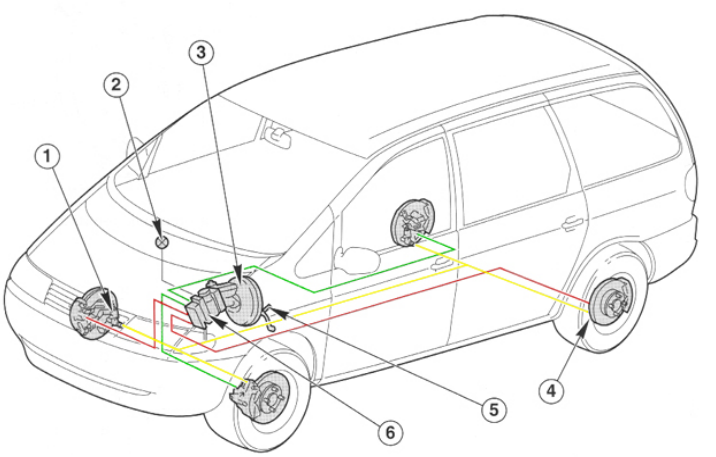

Antilock brake system[1]

Case Study The Mercedes SL class has an impressive package of cutting-edge handling-control systems, which include a new electrohydraulic brake system. Mercedes-Benz calls this Sensotronic Brake Control (SBC) along with Active Body Control (ABC) and the Electronic Stability Program (ESP). Among the most important performance features of the SBC electrohydraulic braking system are the dynamic building up of brake pressure and the precise monitoring of driver and vehicle behavior using sensors.

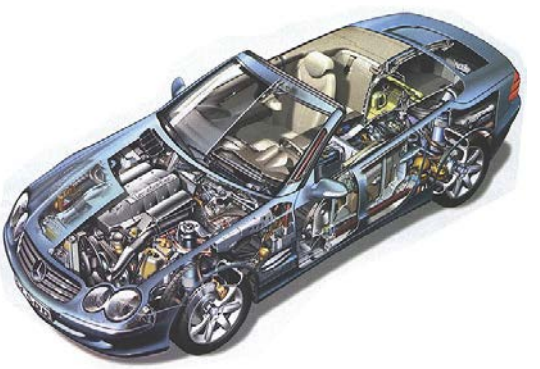

Mercedes SL

Sensotronic Brake Control In emergencies, SBC instantly increases the pressure in the brake lines and applies the pads to the brake discs so that they can grip instantly with full force when the brake pedal is pressed. Furthermore, thanks to variable brake proportioning, SBC offers enhanced safety when braking on bends. Bosch helped to develop the system. Its own version is called an electrohydraulic brake (EHB) system. The system provides the brakes with a fluid supply from a hydraulic high-pressure reservoir sufficient for several braking events.

EHB components

Electro-hydraulic Brake (EHB) System When the brakes are activated, the EHB control unit calculates the desired target brake pressures at the individual wheels. Braking pressure for each of the four wheels is regulated individually via a wheel-pressure modulator, which consists of one inlet and one outlet valve controlled electronically. Normally, the brake master cylinder is detached from the brake circuit, with a pedal-travel simulator creating normal pedal feedback. If ESP intervenes, the high-pressure reservoir supplies the required brake pressure quickly and precisely to the wheel brakes.

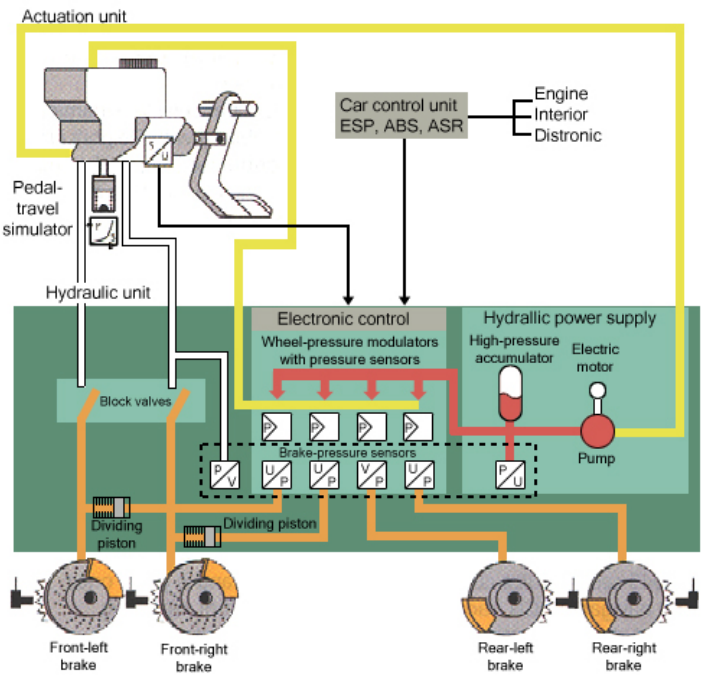

EHB system

Summary Some of the variations in ABS are shown here. However, the principle of operation of all systems is the same. These discreet operating phases have to be achieved:

Pressure reduction
Pressure holding
Pressure decrease.
Many new developments are taking place. The main area of development is the integration of ABS with other systems, such as stability control.

State the main advantage of ABS.

State the THREE operating phases of a hydraulic modulator.

Read the previous section again and note down some key bullet points here:

-
-
-
-
-

Traction control

Introduction The 'steerability' of a vehicle is lost if the wheels spin during severe acceleration. Electronic traction control has been developed as a supplement to antilock brake systems (ABS). This control system prevents the wheels from spinning when moving off, or when accelerating sharply while on the move. In this way, an individual wheel, which is spinning, is braked in a controlled manner. If both or all of the wheels are spinning, the drive torque is reduced by means of an engine control function. Traction control has become known as ASR or TCR.

Antilock Brake System (ABS) Traction control is normally available in combination with ABS. This is because many of the components required are the same for each. Shown here is a block diagram of a traction control system. Note the links with ABS and the engine control system.

Traction control system

Reasons for Traction Control Traction control will intervene to achieve the following:

Driving stability

Reduction of yawing moment reactions

Optimum propulsion at all speeds

Reduced driver workload.

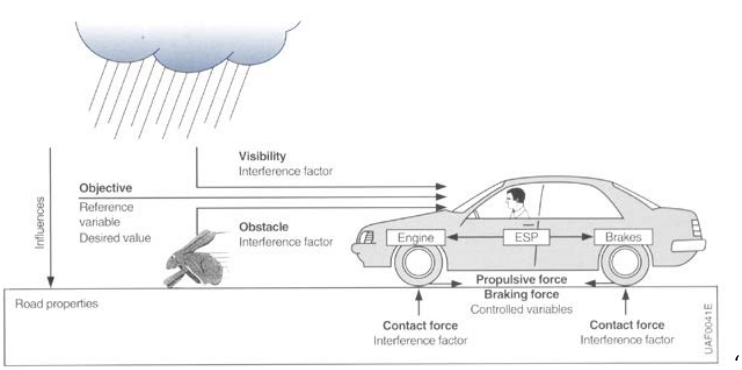

Conditions' acting on the driver and car[4]

Intervention An automatic control system can intervene more quickly and precisely than the driver of the vehicle. This allows stability to be maintained at a time when the driver might not be able to cope with the situation.

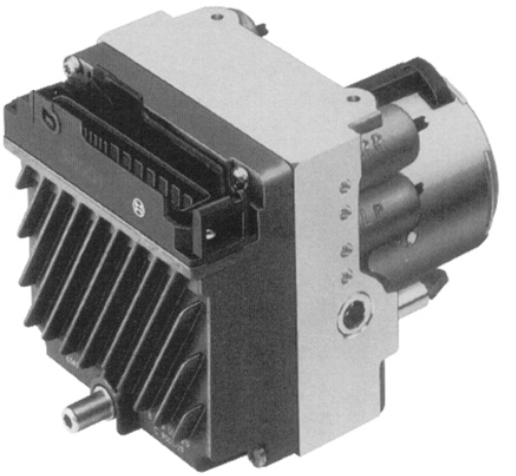

ABS and traction control modulator and ECU[4]

Control Methods Control of tractive force can be achieved by a number of methods:

Throttle

Brakes

Ignition

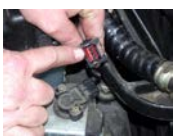

System under test

Throttle control

Ignition control

Braking effect.

Each of these methods is examined further over the next three screens.

Throttle Control Throttle control can be through an actuator, which simply moves the throttle cable. If the vehicle employs a 'drive by wire' accelerator, then control will be in conjunction with the engine management system. This throttle control will be independent of the driver's pedal position. This method alone works, but it is relatively slow to control engine torque.

Wheel spin reduction using throttle control

Ignition Control If ignition is retarded, the engine torque can be reduced up to 50% in a very short space of time. The timing is adjusted by a set ramp value from the actual ignition value.

Wheel spin reduction using throttle and ignition control

Braking Effect If the spinning wheel is restricted by brake pressure, the reduction in torque at the effected wheel is very fast. Maximum brake pressure is not used in order to ensure that passenger comfort is maintained.

Wheel spin reduction using throttle and brake control

Traction Control System A sensor determines the position of the accelerator and, taking into account other variables such as engine temperature and speed, the throttle is set at the optimum position by a drive motor. When accelerating, the increase in engine torque leads to an increase in driving torque at the wheels. In order for optimum acceleration, the maximum possible driving torque must be transferred to the road. If driving torque exceeds that which can be transferred, then wheel slip will occur.

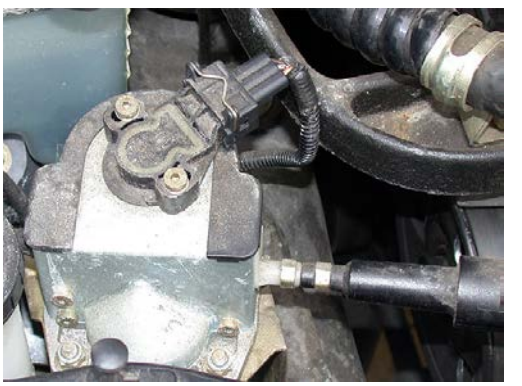

Throttle actuator

Wheel Spin When wheel spin is detected, the throttle position and ignition timing are adjusted. However, better results are gained when the brakes are applied to the spinning wheel. When the brakes are applied, a valve in the hydraulic modulator assembly moves over to allow traction control operation. This allows pressure from the pump to be applied to the brakes on the offending wheel. The valves, in the same way as for ABS, can provide pressure build up, pressure hold, and pressure reduction. This all takes place without the driver touching the brake pedal.

Hydraulic modulator assembly

Electronic Stability Program (ESP) ESP systems intervene to ensure stability under a wide range of situations. Shown here is the difference between a vehicle with and without a stability control system. Sensors supply an electronic control unit with information on vehicle movement, such as rotation about a vertical axis. This is known as yaw. By controlling the driving force from the engine and the braking force to individual wheels, the vehicle can be kept in a stable condition. This occurs even if the driver is not fully in control!

Summary Traction control is designed to prevent wheel spin when a vehicle is accelerating. This improves traction and ensures vehicle stability. Antilock brakes and traction control have now developed into complex stability control systems.

Explain why traction control is not normally available as an independent system, but in combination with ABS.

State THREE methods of controlling tractive force used by traction control systems.

Read the previous section again and note down some key bullet points here:

-
-
-
-
-

Service and repair

Routine Maintenance

Scheduled Servicing Scheduled service requirements are often quite simple but none-the-less important. Systems should be checked for correct operation. Adjustments, repairs or replacements are then made if required.

All systems need some maintenance[2]

Non-Routine Work When carrying out routine maintenance, some non-routine work may be found. This should be reported to the driver or owner of the vehicle before repairs are carried out.

Report findings to the driver

3. **Worksheet** Service front disc brakes.

Jack up and support the vehicle on stands or use a suitable hoist. Remove the appropriate wheels to allow inspection of the brake pads. Recommendations vary, but in most cases, the pads should be replaced if the lining is less that 1.5 mm.

Checking the pad lining thickness

Caliper and Piston Removal Methods of pad removal differ, so check the manufacturer's latest data. However, most types are quite simple. The method described here relates to the type where part of the caliper is removed. Turn the steering to a lock position, which allows easier access to the caliper and pads. Wash the caliper and pad assembly using a proprietary brake cleaner or suitable extractor. If necessary, remove some brake fluid from the reservoir. This is because when the piston is pushed back to allow new pads to be fitted, fluid can overflow.

Brake dust washer

Brake Pad Removal If a retaining bolt clip is fitted, it should be removed. Undo both caliper piston-fixing bolts. Many types require an Allen wrench. Rock the assembly from side to side. This moves the pads and pushes the piston in, just far enough to allow the caliper piston to be removed. Withdraw the pads, using a small lever to help, if a spring clip holds one of the pads into the piston. Keep the pads to show to the customer if necessary and then dispose of them in line with environmental regulations. Examine the disc for grooves and corrosion.

Check the disc

Refitting the Pads Use a G/C clamp to push the caliper piston fully home. Fit the new pads in position together with anti-squeal shims if they are used. Some manufacturers recommend that copper grease be applied to the back and sides of each pad. However, be careful not to contaminate the lining material. Pads on both sides of the vehicle must always be replaced as a set. Refit the caliper and tighten both bolts to the recommended torque. Pump the brake pedal until it feels hard. This is to make sure the pads are moved fully into position. Double check correct operation and then refit the road wheels. Lower the vehicle to the ground. Road test to ensure correct operation.

Push the piston back

Fit the pads

Secure the caliper

Pump the brakes

4. **Worksheet** Service rear drum brakes.

Jack up and support the vehicle on stands or use a suitable hoist. Remove the appropriate wheels and release the parking brake. Remove the cap that protects the hub nut and remove the locking tab or pin if used. Undo the nut and remove the outer bearing. Now remove the drum together with the inner bearing. Alternatively, remove the drum fixing screw and remove the drum.

Rear brake shoes and drum

Removing Brake Shoes Wash the backplate, shoes and drum assembly using a proprietary brake cleaner or suitable extractor. Inspect the brake shoes; recommendations vary slightly, but in most cases, the shoes should be replaced if the lining is less that about 1.5mm. Methods of shoe removal also vary so check the manufacturer's data. Remove the shoe hold-down fixings if fitted. These usually twist or pull free. Note the position of the shoe return springs and remove them with a special brake-spring tool. Remove the parking brake cable. On some vehicles, the shoes can be removed together with the parking brake cable, adjuster and return springs, which can then be taken off.

Wash the backplate

Remove spring clips

Remove handbrake cable

Remove return springs

Refitting Brake Shoes Check the wheel cylinders for leaks by peeling back the dust seals. The cylinders should be overhauled or replaced if leaks are detected. Show the old shoes to the customer, if necessary, and then dispose of according to environmental regulations. Clean off the backplate and apply special grease to the shoe contact points. Do not use ordinary grease; it will not stand the high temperatures. Fit the return springs and adjuster to the new shoes. Fit the shoes to the backplate, making sure they fit into the lower pivot and wheel cylinder slots. Use a shoe retractor to lever the shoes into place. Refit the parking brake cable and shoe hold-down clips. Make sure the shoes are centralized.

Check cylinders

Refit the shoes

Testing the Brakes Refit the drum, bearings and nut; tighten to the correct torque. Alternatively, refit the drum and fixing screw if used. Pump the brake pedal until it feels hard. This is to make sure the shoes are adjusted and moved fully into position. Check for correct fit and that the drum spins freely, and then refit the road wheels. Lower the vehicle to the ground. Road test to ensure correct operation. Remember to check that the parking brake works correctly and adjust the cable if necessary.

Check brakes on a road test[2]

Summary Safety of all road users and pedestrians is essential. Reliable operation of the vehicle is also important. The condition of all systems is therefore vital. Carry out a check at all service intervals.

Read the previous section again and note down some key bullet points here:

-
-
-
-

Remove, Replace, Strip and Rebuild Components

Introduction Some suspension components, such as dampers, are quite easy to remove and replace. However, some systems are more complex and require special procedures. The instructions in this section are intended as a guide. Details must be obtained from other sources before work is begun.

Some cars have active damping systems[2]

5. **Worksheet** Remove, overhaul and refit brake caliper.

Clean the system

Remove caliper bolts

Note that the following description is generic and that fixing methods vary, so refer to manufacturers' procedures as required. Raise and support the vehicle. Remove the wheel. Clean away any dust using a proprietary cleaning system. Undo the securing bolts and remove the brake pads. Clamp the flexible brake pipe using a proper pipe clamp. Undo the pipe from the caliper. It may be necessary to remove the caliper assembly and turn it to unscrew the pipe connection. Have plenty of paper or rags handy to catch any fluid that spills.

Remove pads

Undo the flexible pipe

Removing the Piston To remove the piston from the caliper it is usually necessary to direct compressed air into the flexible pipe connection on the caliper. Use lots of paper or rags to catch fluid that spills and to protect the piston. The fluid may be expelled with a lot force, so be careful. Note carefully how the piston seal is fitted and remove it with a plastic or wooden tool. Inspect the piston and bore for signs of scratches, corrosion or excessive wear. If any serious damage is noted, the complete unit should be replaced. Light corrosion in the bore may be removed using a honing tool or very fine emery paper.

Remove the piston

Caliper and piston

Fitting the New Seal Thoroughly clean all parts using brake fluid or a brake system cleaner. Do NOT use petroleum-based solvents. Dry all parts using compressed air. Cleanliness is very important. Lubricate the new piston seal with clean brake fluid and install it. Make sure it is fitted the correct way. Refit the piston into the cylinder. Refit the dust seal if used.

Caliper piston seal

Refit Screw the flexible pipe into the caliper and refit the caliper mounting bolts. Make sure the pipe connection is secure. Refit the pads and secure in position as required. Remove the brake pipe clamp.

Refit the caliper and pads

Refit the spring clip

Bleeding The system will now require bleeding to remove air. This may be done using a pressure bleeder or a simple tube and bottle system. Where just one corner of the car has been disturbed, and a pipe clamp used, it is usually possible to just bleed that part. Connect a small pipe to the bleed nipple and place the other end into a clear bottle that is half-full of clean brake fluid. Release the bleed nipple –about half a turn is usually enough.

Top off the reservoir to the 'MAX' mark

Connect tube and container

Removing All the Air Get an assistant to pump the brake pedal slowly while you make sure the fluid reservoir remains topped off. Watch the bottle and when no more air is being expelled, get your assistant to hold the brake pedal down – and then tighten the bleed nipple. Make sure the reservoir is topped off to the correct level and check that the brake pedal feels hard when operated. Check for leaks, replace the wheel and lower the car to the ground. Road test to ensure correct operation.

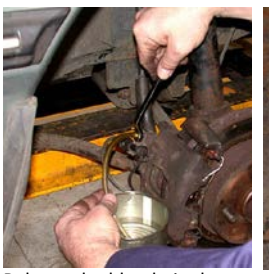
Release the bleed nipple

Pump the pedal slowly

6. **Worksheet** Remove, overhaul and refit brake wheel cylinder.

The following description is generic and fixing methods vary, so refer to manufacturers' procedures as required. Raise and support the vehicle. Remove the wheel. Undo the securing bolt or the hub nut and remove the brake drum. Clean away any dust using a proprietary cleaning system. Clamp the flexible brake pipe using a proper pipe clamp. Remove the brake shoe hold-down clamps and the brake return springs. Remove the parking brake cable.

Remove the brake drum

Clean the shoes and backplate

Remove brake shoe clips

Remove the shoes

Removing the Wheel Cylinder Undo the pipe from the cylinder. Have plenty of paper or rags handy to catch any fluid that spills. Undo the cylinder securing bolts and remove it from the backplate. The overhaul description refers to a double-acting cylinder. However, the procedure is the same for a single-acting type. Remove the rubber dust seals. To remove the pistons from the cylinder, grip the ends with pliers and remove carefully. Use lots of paper or rags to catch lost fluid and protect the pistons. Note carefully how the seals are fitted. Remove them with a plastic or wooden tool.

Undo the pipe connection

Undo the mounting bolts

Remove the dust seals

Remove the cylinder

Inspect the Pistons and Bore Inspect the pistons and bore for signs of scratches, corrosion or excessive wear. If any serious damage is noted, the wheel cylinder should be replaced. Light corrosion may be removed using a honing tool or very fine emery paper. Thoroughly clean all parts using brake fluid or a brake system cleaner. Do NOT use petroleum-based solvents. Dry all parts using compressed air. Cleanliness is very important. Lubricate the new piston seals with clean brake fluid and install them carefully. Make sure they are fitted the correct way round. Refit the pistons into the cylinder and refit the dust seals.

Remove the piston

Remove the spring

Remove the seal

Refit new parts

Refitting Screw the cylinder to the backplate and fit the flexible pipe. Make sure the pipe connection is secure. Refit the shoes and secure in position as required. Refit the brake drum and secure in position with the screw or hub nut as appropriate. Remove the brake pipe clamp. The system will now require bleeding to remove air. This process is exactly as described previously.

Bleed the system

Pump the brakes before moving off

7. **Additional Worksheet** Remove and refit brake lines

8. **Additional Worksheet** Remove and refit master cylinder

Read the previous section again and note down some key bullet points here:

-
-
-
-
-

9. **Worksheet** Remove and refit wheel bearings.

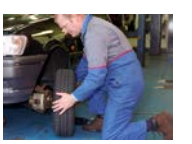
Wheel being removed ready for repair work

Apply the parking brake and loosen the road wheel nuts. Raise the front or rear of the vehicle as required, support it on stands and remove the road wheel. The methods outlined here are generic. Refer to manufacturers' data for specific instructions.

Front Hub Assembly Remove the drive shaft nut split pin. Use an assistant to apply firm pressure to the brake pedal and, while the brake is applied, unscrew the driveshaft nut. Remove the brake caliper and the disc. Using a ball-joint breaker tool, disconnect the joint from the steering arm. Unscrew the nuts and remove the bolts to release the strut from the hub assembly. Unscrew the nut and remove the clamp bolt securing the lower ball joint to the hub assembly. Place a suitable lever between the lower arm and the anti-roll bar. Push downward to release the ball joint from the hub. Finally, remove the hub from the drive shaft.

Removing the hub nut

Bearings and Seals Extract the inner oil seal, spacer and outer oil seal. Drive out one of the bearings, invert the hub and drive out the remaining bearing. Inspect the bearings for signs of wear and damage; replace as necessary. Pack the new bearings with suitable grease and press them into the hub. Fit the oil seals and spacer. Locate the hub on the drive shaft. Fit the flat washer and drive shaft nut.

Front hub components

Refitting the Hub Fit the hub assembly to the lower ball joint, fit the clamp bolt and tighten the nut. Fit the hub to the strut, fit the bolts and tighten the nuts to the correct torque. Connect the ball joint to the steering lever and fit and tighten the nut. Fit the disc to the drive flange and tighten the securing screws. Fit the brake caliper. Use an assistant to apply firm pressure to the brake pedal and, while the brake is applied, tighten the drive-shaft nut to the correct torque. Lock the nut with a new split pin. Fit the road wheel and nuts.

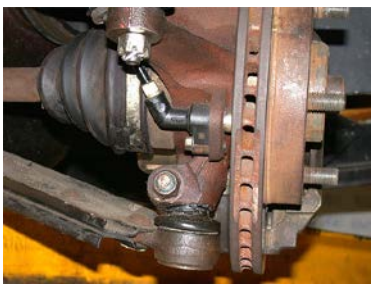
Lower ball joint

Rear Hub Assembly Withdraw the grease retainer cap from the center of the hub and extract the split pin from the stub shaft. Unscrew the hub nut, remove the flat washer and withdraw the hub and brake drum assembly. Extract the hub oil seal, drive the inner bearing out and collect the spacer. Invert the hub and brake drum assembly and drive out the outer bearing. Inspect the bearings for signs of wear and damage; replace as necessary.

Rear hub components

Bearings Pack the bearings with suitable grease and press the outer bearing into the hub with the side marked THRUST facing outward. Invert the hub, fit the spacer and press the inner bearing with the side marked THRUST outward into the hub. Dip the new oil seal in oil and press it into the hub (sealing lip facing inward). Fit the hub and brake drum assembly to the stub shaft, fit the flat washer and fit and tighten the hub nut to the correct torque. Lock the nut with a new split pin. Fit the grease retainer cap, and then fit the road wheel and nuts.

Packing bearings with grease

10. **Worksheet** Remove and refit driveshaft

Driveshaft Removal Split the steering track rod end from the steering arm and remove it. Remove the bolts securing the hub to the suspension strut. Pivot the hub outward to the limit of its movement, but be careful not to strain the brake hose. Maneuver the drive shaft from the hub. Carefully pry between the driveshaft inner joint and the differential housing to release the spring ring. Withdraw the driveshaft.

Driveshaft

Splitting the track rod end joint

Driveshaft Refitting To refit, slide the shaft into the differential housing until the spring ring engages. Maneuver the outer end of the drive shaft into the hub and fit the nut and washer. A new nut may be required by some manufacturers. Refit the suspension strut and the steering joint. Use an assistant to apply the foot brake and then tighten the driveshaft nut to the specified torque. Fit a new split pin or knock in the tab as required. Refit the road wheel and lower the vehicle. Torque the wheel nuts and road test.

Refitting the strut

11. **Additional Worksheet** Remove and refit ABS hydraulic unit

Read the previous section again and note down some key bullet points here:

-
-
-
-

Fault diagnosis

Checking the system

Introduction System performance checks are routine activities that occur during all servicing work. They start at pre-delivery and continue for all scheduled service intervals.

Systems need checking regularly[2]

12. **Worksheet** Check braking operation

Two methods are used for braking system efficiency tests: road testing and brake-roller testing. For roller testing, follow the manufacturer's instructions. CAUTION: Before testing brakes, examine all brake components. Do not road test a vehicle that is in a dangerous condition.

Braking System Operation Raise the vehicle on a hoist or a jack and stands. Make sure it is supported securely. Check the brake fluid level and top off as required. Inspect all metal brake pipes for signs of corrosion and leakage. Inspect all flexible pipes for leaks and "ballooning." Get an assistant to apply pressure to the brake pedal as you examine the flexible pipes. The pipes may move slightly but should not expand. Inspect the master cylinder and servo assembly for signs of leakage. Check servo operation by applying pressure to the pedal and starting the engine. Your foot should move further down as the engine starts and servo assistance is applied.

Checking the brake fluid level

Check the flexible pipes

Road Test Once you are satisfied with all of the previous checks, conduct a road test. Ideally, this should be on a private road or area. From a slow speed, brake gently and then gradually increase the speed as you become confident in the operation of the brakes. At a slow speed, brake harder and note the feel of the steering wheel. If the wheel pulls one way, it indicates that uneven braking is being applied to the front wheels.

Brake Tests Apply the parking brake when the vehicle is not moving. Put the vehicle in gear and try to pull away. The engine will usually overpower the brake, but this test gives a good feel for the parking brake performance! During all of the previous tests, check for general stopping power, pedal pulsation, vibration and any unusual noises. On return to the shop, strip and inspect the brakes as required.

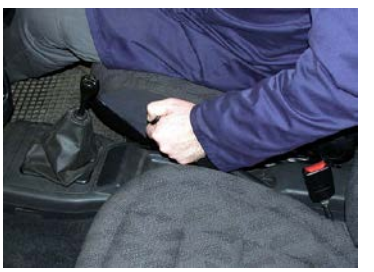
Applying the parking rake

Check for pedal vibration

13. **Worksheet** Check vacuum servo unit operation

Ensure that the engine is in good running order because the vacuum servo is powered by a connection to the intake manifold. Check for air leaks as foot pressure is applied.

Vacuum servo unit

Vacuum Servo Operation Check servo operation by applying pressure to the pedal and starting the engine. Your foot should move further down as the engine starts and servo assistance is applied. It may not be necessary to check further if this test result is satisfactory. However, a thorough test is always advisable. Shut off the engine and wait five minutes. Apply the brakes and check that servo assistance is available for at least one application. This indicates a good air seal, if vacuum is retained. Connect a vacuum gauge to the inlet manifold and note the reading with the engine running at idle. A reading of about 0.5 bars is typical.

Vacuum Tests Connect a vacuum gauge to the servo pipe, after the check valve, and note the reading with the engine running at idle. The reading should be the same as before. If not, check the pipe for kinks or blockages. Make sure the check valve blocks when you blow from the manifold end. Replace if in any doubt. Reconnect all parts and check for leaks.

Servo check valve

Summary System performance checks are often quite simple. However, they are important. Cars are operated at high speeds and sudden breakdowns can be dangerous. Therefore, systems should function correctly at all times.

Read the previous section again and note down some key bullet points here:

-
-
-

Inspect and Measure Components

Introduction The main inspections and measurements carried out to the system are included in this section. Inspections should take place at scheduled service intervals, and if problems have been reported.

14. **Worksheet** Inspect and measure brake-disc thickness and run out.

Jack up and support the vehicle. Remove the appropriate wheels. Select neutral if the wheels are on the driven axle. Lever the pads back just enough to allow the disc to rotate freely.

Brake disc

Disc Condition and Thickness Inspect the surface of the disc for signs of cracking and grooves. Small grooves are to be expected after a period of use. Grooves deeper than about 0.4 mm are usually considered excessive. Using a micrometer, measure the thickness of the disc at several different places around the disc, toward the center and toward the outer edge. Compare the readings to the manufacturer's specifications. Some manufacturers stamp the minimum thickness just inside the center of the disc.

Assesses disc condition

Measure outer edge

Measure inner section

Check readings

Disc Run Out Mount a dial gauge (dial indicator) on a magnetic stand (or other appropriate type of stand) with the plunger running about 15 mm in from the outer edge of the disc. Zero the gauge and rotate the disc. Note changes in the dial gauge reading. Refer to the manufacturer's specifications for maximum allowable run-out. As a guide, 0.15 mm is usually considered the limit. Refit all components and lower the vehicle to the ground.

15. **Worksheet** Inspect antilock brake system and measure wheel sensors.

There are many types of antilock brake systems. Remember to check the latest data before starting work. The first task is to carry out simple hand and eye tests – fluid levels, connection security and leaks, for example. Next, check the battery condition, fuses and the operation of the normal brakes. Check the operation of the ABS warning light by comparing its action to the manufacturer's data.

ABS modulators[4]

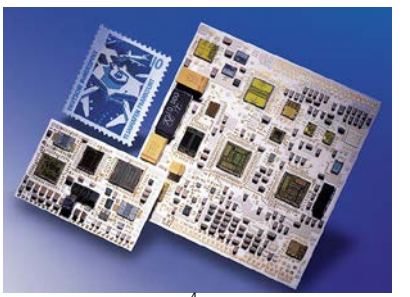
ABS ECU components[4]

Reluctor Wheel and Sensor Gap Support the vehicle securely on a wheel-free hoist or axle stands. Inspect the wheel speed sensors and make sure the reluctor wheel and sensor gap are clean, free from corrosion and in good condition.

Wheel speed sensor

Checking the reluctor wheels

Wheel-Speed Sensor Testing Check wheel-sensor operation. A clean regular sine-wave output proportional to wheel speed should be shown on a scope. If testing with an ohmmeter, disconnect before measuring and note that the resistance of each sensor should be the same. The results of sensor tests at the ECU connections should be the same as at the sensor. If so, this confirms the wire continuity from the sensors to ECU. On most vehicles, disconnecting the ABS fuse for ten seconds will reset the fault memory in the ECU.

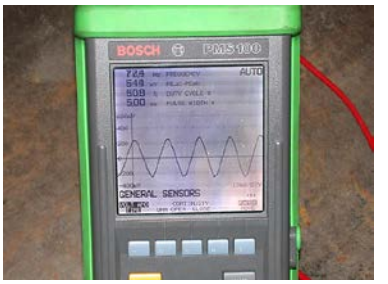

Sine wave output

Resistance reading

Summary Some repairs can involve significant work. However, do not make any compromises. The braking system clearly has a role in safety. Keep your customers and yourself safe.

Read the previous section again and note down some key bullet points here:

-
-
-
-
-

Faultfinding and Inspections

Introduction The secret with finding faults is to have a good knowledge of the system and to work in a logical way. Use manufacturers' data and recommended procedures. This section includes general and specific faultfinding procedures.

Check data before starting work

Symptoms and Faults Remember that a symptom is the observed result of a fault. The next few screens each state a common symptom and some possible faults. It is important to note that faults in one system can produce symptoms that may appear to be caused by another.

Excessive Pedal Travel Possible causes of this symptom are:

Incorrect shoe adjustment

One hydraulic line leaking.

Old style brake adjuster

Poor Performance When Stopping Possible causes of this symptom are:

Pad and/or shoe linings worn

Seized caliper or wheel cylinders

Contaminated linings

Worn linings

Worn pads

Car Pulls to One Side When Braking Possible causes of this symptom are:

Seized caliper or wheel cylinder on one side

Contaminated linings on one side

Worn linings on one side.

Brake cylinder

Spongy Pedal Possible causes of this symptom are:

Air in the hydraulic system

Master cylinder seals failing

Flexible pipes ballooning.

Flexible pipes

Master cylinder

Pedal Travels to the Floor Possible causes of this symptom are:

Fluid reservoir empty

Failed seals in master cylinder

Severe leak from a pipe or union.

Fluid reservoir

Brakes Overheating Possible causes of this symptom are:

Shoe return springs broken

Calipers or wheel cylinders sticking

Adjustment incorrect.

Brake shoe return springs

Brake Judder Possible causes of this symptom are:

Linings worn

Drums out of round

Discs have excessive run-out.

Checking disc run out

Squeaking or Squealing Possible causes of this symptom are:

Badly worn linings

Dirt in brake drums

Anti-squeal shims missing from rear of pads.

Worn brake linings

Systematic Testing Working through a logical and systematic procedure for testing a system is the only reliable way to diagnose a problem. Use these six stages of faultfinding as a guide.

Stages of faultfinding

Faultfinding Procedure As an example of how the stages are applied, assume that the customer reports that the brakes are pulling to one side when applied. The recommended method for diagnosing the problem would be to carry out the procedures outlined over the next five screens.

Check the latest data

Verify the Fault Perform a general inspection of the brake system and then road test to confirm the fault. Drive slowly and in a quiet area when working with this type of fault.

Collect Further Information With the vehicle on a lift, inspect non-brake system items such as tires and dampers. Look for signs of leaks and overheating. Also, talk to the customer. Ask, for example, when and how the fault developed. A fault that developed gradually may indicate a wearing component.

Check the tires…

Dampers…

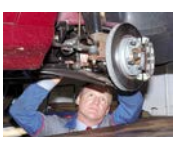
Brake pipes…

And suspension

Evaluate the Evidence Consider the evidence you have collected so far. A problem that developed slowly is more likely to be a component that you would expect to wear out. Brake pads, for example. If the vehicle is pulling violently to one side, the fault is often the front wheel on the opposite side. Problems with the rear brakes have limited effect, because they supply a smaller braking force.

Stop and think!

Carry Out Further Tests Strip down and inspect the brakes on the side of the vehicle where you suspect the problem to be. Often, with a serious fault such as this, the problem is obvious. However, if necessary, get an assistant to apply brake pressure and check the movement of the cylinder or caliper piston. Take care not to allow the piston to be pushed completely out of the cylinder. Assume, in this case, that the fault is a seized caliper piston.

Check the caliper piston

Fix the Problem The caliper should be overhauled or replaced. If the pads are contaminated in any way, they should be replaced. It is always recommended that brake linings be replaced in pairs. This is partly because, if one has worn, the other will soon. However, it is also because the braking will be badly affected if the performance is unequal.

Removing the caliper

Check All Systems Test the operation with a road test and inspect all other related components for security and safety. It is possible, when fixing one fault, to accidentally cause a new problem. It is also possible that another fault exists, and it may appear to the customer that you have caused it! For both of these reasons, check that ALL systems work correctly after any repairs have been carried out.

Double check all systems

Vibration Possible problems that could produce this symptom are:

Incorrect alignment of propshaft joints

Worn universal or constant-velocity joints

Bent shaft

Driveshaft out of balance

Mountings worn.

Propshaft center bearing mounting

Grease leaking Possible problems that could produce this symptom are:

Gaiters split

Clips loose

Universal joints overheating.

CV gaiter

Knocking noises Possible problems that could produce this symptom are:

Dry universal or constant-velocity joints.

Worn constant-velocity joints (gets worse on tight turns).

Universal joint

No Drive Possible problems that could produce this symptom are:

Broken driveshaft or propshaft

A problem with the transfer box selector or gear

Splined joint rounded off.

Splines on a driveshaft

Faultfinding Procedure As an example of how the stages are applied, assume the reported symptom is a rumbling noise. Carrying out the procedures, outlined over the next five screens, would be a recommended method.

Check the latest data

Verify the Problem Road test the car, with the customer if possible, to check the symptoms. Remember, it is not that you don't believe customers. Instead, it is often difficult for them to describe symptoms without technical knowledge.

Collect Further Information Make sure, during the road test, that you drive the car through a variety of conditions. For example, make sharp and long turns in both directions. Drive at low speeds and at high speeds. Also, talk to the customer, for example, ask if the noise started suddenly or gradually.

Talk to the customer if possible

Evaluate the Evidence Remember at this point to stop and think! If the noise has developed slowly, it may suggest a component such as a wheel bearing is wearing out. If the noise is noticeable all the time but worse on turning, it may help you to decide which bearing is at fault. Note however, that noisy bearings sometimes run quietly, when loaded on turns.

Stop and think!

Carry out Further Tests Jack up the car and support it on stands or use a wheel-free hoist if available. Spin each wheel in turn and listen for noise. Rock the wheel in and out at the top to check for bearing movement. It may also be necessary to run the wheels.

Checking the bearing freeplay

Fix the Problem Once the suspect bearing has been identified, it must be replaced. Follow manufacturers' instructions for this task. Make sure that the new parts used are of good quality.

Damaged wheel bearing

Check all Systems It is possible, when fixing one fault, to accidentally cause a new problem. It is also possible that another fault exists, and it may appear to the customer that you have caused it! For both of these reasons, check that ALL systems work correctly after any repairs have been carried out.

CV gaiter

Summary Faultfinding work is rewarding – when you find the fault! Remember to always work in a logical way. The stages of faultfinding can be applied to all systems on the vehicle, complex or simple.

16. **Additional Worksheet** Check ABS operation

17. **Additional Worksheet** Inspect and test hydro-boost system

18. **Additional Worksheet** Inspect, test, replace and adjust brake system valves

19. **Additional Worksheet** Inspect, test and replace brake warning lights.

Read the previous section again and note down some key bullet points here:

-
-
-
-
-

Suspension and Steering

Safety, tools & equipment and customer care

Health and Safety

Safety First Before carrying out any service or repair work, refer to all appropriate health and safety guidelines. Always follow all safety procedures and observe safety precautions when working on vehicles. Some specific hazards are listed in this section. General safety advice is also included.

Be smart, be safe[2]

Check safety procedures

Asbestos Many types of brake-lining material and friction discs contain asbestos fibers. Always follow safety precautions when handling asbestos.

Dust extractor in use

Clutch disc

Brake pads

Brake shoes

Skin Contact When servicing vehicle systems, avoid skin contact with new and used engine oils. Use barrier cream or non-porous gloves. Be careful with hot oil, particularly when carrying out oil draining operations. Never keep oily rags in overalls or other pockets and change out of oil-contaminated clothing as soon as reasonably possible.

Wear gloves or use barrier cream

Running Engines Running engines are sometimes needed for diagnostics and system checks. A running engine presents two hazards: the first is the risk from rotating components and the second from the accumulation of exhaust gas in the workshop. Remain aware of rotating parts such as the fan, belt and pulleys in the areas where you are likely to be working.

Electrically Driven Fans An electrically driven fan is switched on automatically when the temperature of the coolant in the radiator rises above the switch operating temperature. This can occur even when the ignition is switched off. For diagnostic tests, always keep fingers out of the fan cowl and always remove the battery ground cable when the engine does not need to be running.

Exhaust Emissions When running an engine, it is important to prevent the build-up of exhaust gas in the workshop. Use extraction equipment or provide good ventilation.

Extraction equipment

Hot Components When used for prolonged periods, vehicle components can become very hot. In particular, be careful not to touch the exhaust when working under the vehicle or on the engine.

Be aware of hot exhausts

Protective Clothing Overalls should ideally be worn at all times. This protects your clothes as well as your skin. Gloves, goggles, breathing masks, hats and strong footwear may also be necessary.

Personal protective equipment in use

Working Below Vehicles There are a number of hazards to avoid when working under vehicles. One is the risk of hitting your head, which can obviously cause injury. Another risk is the possibility of getting rust and dirt in the eyes. Avoid these problems by wearing a bump cap and goggles whenever working below vehicles. The vehicle must always be supported safely before working underneath or alongside it.

Car on a ramp

Bump caps protect your head

Heavy Loads A risk may be present if a task requires the lifting and moving of heavy loads. Many vehicle components fall into this category. Always tackle these tasks in an appropriate manner by ensuring the use of the recommended lifting equipment. Ask for assistance if necessary. Even some propshafts can be difficult to handle.

Steering box

Wheel

Jacking and Supporting Only use the recommended jacking and support points when lifting a vehicle. Refer to the manufacturer's instructions if unsure. Ensure the jack and support stands, which must be used at all times, have an appropriate safe working load (SWL).

Jacking point

Support point

Wheel free bars

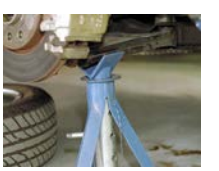
Axle stands

Caution-Attention-Achtung! All types of fuel – and particularly the vapors – are highly flammable. They can be ignited from a number of sources. Any exposed flame, a short circuit, a cigarette or, under the right conditions, even a hot object will start a fire.

Take care!

Electrical Sparks Electrical sparks are the most common cause of workshop fires. These can occur during the connection and removal of electrical terminals. Sparks also occur when the engine is cranked with the ignition on and the spark plugs removed. Disconnect the coil or connect the HT cables directly to the ground to prevent this.

Short Circuits If a wire or tool is allowed to join the battery positive connection to the negative connection, a serious short circuit will result. A wire would become extremely hot and, in addition to the obvious fire risk, would burn through whatever part of your body it was touching. The demonstration shown here was carried out under the supervision of highly trained experts. Do NOT attempt to copy it. The same results occur if shorts are made on the vehicle. Exercise caution.

Original Equipment In consideration of other people's property, always be careful to use approved parts. Original equipment manufacturers' (OEM) parts may be required to meet safety regulations.

Use good quality parts…

For all repairs…

And replacement…

Work

Refrigerant Refrigerant used in air conditioning systems is dangerous. If it comes in to contact with the skin, it produces severe frostbite. Wear protective goggles and gloves at all times. Use gloves designed for the purpose; leather or fabric gloves are NOT suitable. If refrigerant is exposed to naked flames or hot surfaces, it produces toxic gases. Always ensure adequate ventilation when working on air-conditioning systems.

R134a container

Pressurized Cooling Systems If work has to be carried out on the vehicle heater or the cooling system, there is a risk of scalding. The coolant is run at a pressure higher than atmospheric pressure. If the cap is removed when hot, the coolant can boil instantly, ejecting boiling water and steam.

Cooling system

Rotating Driveline Components The Ferrari shown here was under test on a rolling road. It was being driven at well in excess of 100 mph! Note how important it is to ensure all driveline components are in good order.

Transmission Wind Up On four-wheel drive vehicles, it is possible for the transmission to "wind up" when the front and rear axles are locked together. This is because the two axles may run at slightly different speeds. When on rough ground it is not a problem because the bouncing and movement allows the tires to slip. On hard surfaces however, a twist or "wind up" of the components such as driveshafts occurs. When the vehicle is jacked up, the transmission can unwind suddenly, causing a serious injury. This does not occur on vehicles with an unlocked center differential or a viscous drive.

Driving Technique! Always follow national, state and local driving regulations when road testing vehicles. This video, however, shows advanced drivers practicing on a skidpan. If you get the chance, try it out.

Springs Under Compression When coil springs are removed from a suspension strut, they should be held using a special tool. If the fixings are removed without compressing the spring, it may release considerable energy and cause damage or personal injury.

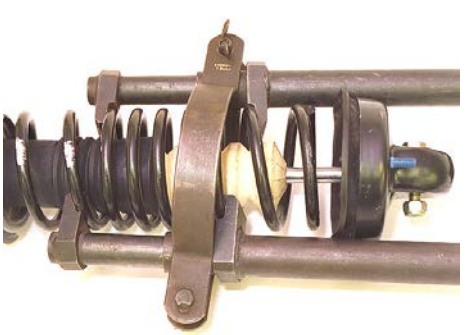
Coil spring in a compression tool

Read the previous section again and note down some key bullet points here:

-
-
-
-

Tools and Equipment

Introduction Components will usually be removed, inspected and repaired or replaced when a defect has been diagnosed. Other components are replaced, or stripped and cleaned, at scheduled mileage or time intervals. Refer to the Routine Maintenance section for details on these items.

Good tools and equipment are important

Recommended Procedures The descriptions provided in this section deal with the components for individual replacement, rather than as a part of other work. Always refer to a workshop manual before starting work. You will also need to look for the recommended procedure, special tools, materials, tightening sequences and torque settings. Some general and specific tools and pieces of equipment are described on the following screens.

Refer to data as required

General Toolkit General tools and equipment will be required for most tasks. As your career develops, you will build a collection of tools and equipment. Look after your tools and they will look after you!

Snap-on tools

Soft Hammers These tools allow a hard blow without causing damage. They are ideal for working on driveshafts, gearboxes and final drive components. Some types are made of special hard plastics whereas some are described as copper/hide mallets. This type has a copper insert on one side and a hide or leather insert on the other. It is still possible to cause damage so do exercise care.

Some hammers contain metal shot to give a 'dead blow'[5]

Ball Joint Splitter Two types of ball joint splitter are in common use. One type is a simple forked wedge that is hammered in between the joint and the arm. This works well but can damage the joint. If the joint is to be reused, the lever type splitter is preferred. This tool clamps onto the arm and threaded section of the joint. A bolt is tightened, which applies a force to push the joint free.

Wedge type splitter

Lever type splitter

Jacks and Stands Most jacks are simple hydraulic devices. Remember to make sure the safe working load (SWL) is not exceeded. Ensure that any faults with equipment such as this are reported immediately. Axle stands must always be placed under the vehicle supporting the weight – before work is carried out.

Always use stands

After jacking a vehicle

Ramps and Hoists Many types of ramps or hoists are available. These range from large four-post wheel-free types through two posts and smaller single-post lifts, to portable devices. These large items should be inspected regularly to ensure they are safe.

Four post lift in use

Two post lift

Single post lift

Portable lift[5]

Transmission Jack If a complete gearbox has to be removed, it is likely to be heavy! A transmission jack has attachments that allow you to support the gearbox and lower it safely. The equipment is hydraulically operated just like an ordinary jack. Often, the height can be set by using a foot pedal, which leaves both hands free for positioning the unit.

This jack will support a gearbox[5]

Pullers Removing some bearings is difficult without a proper puller. For internal bearings, the tool has small legs and feet that hook under the bearing. A threaded section is tightened to pull out the bearing. External pullers hook over the outside of the bearing and a screwed thread is tightened against the shaft. A slide hammer is a form of puller. It consists of a steel rod over which a heavy mass slides. The mass is "hammered" against a stop, thus applying a pulling action.

Hydraulic puller[5]

Slide hammer[5]

External puller[5]

Internal puller[5]

Air Tools The whole point of power tools is that they do the work so you don't have to! Air guns produce a "hammer" action. Because of this, impact sockets should be used. Normal sockets can shatter under this load. It is important to remember that air tools need lubricating from time to time. Air ratchets are very useful for removing or fitting nuts and bolts. However, it is possible to over tighten if care is not taken. Air tools can be very powerful and will trap your hands!

[5]

Air drill[5]

Air chisel[5]

Air ratchet

Air gun[5]

Air Ratchet These tools are very useful for removing or fitting nuts and bolts. However, it is possible to over-tighten if care is not taken. Air tools can be very powerful and will trap your hands! Take adequate precautions at all times.

These tools are very useful[5]

Air Guns The whole point of power tools is that they do the work so you don't have to! Most air guns have an aluminum housing. This material is lightweight but has a long life. Air guns produce a 'hammer' action. Because of this, impact sockets should be used. Normal sockets can shatter under this load. It is important to remember that air tools need lubricating from time to time.

Air guns get the job done fast[5]

Coil Spring Compressors Springs must be compressed before they are removed from suspension struts. A number of different tools are available. However, the type shown here is very popular. The two clamps are positioned on either side of the spring using the hooked ends. The bolts are then tightened evenly until the tension of the spring is taken by the clamps.

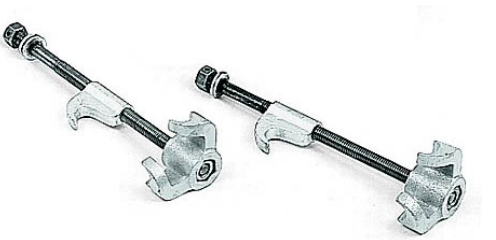

Spring compressors[5]

Ball Joint Presses To remove a taper fitting ball joint, a splitter or press is usually needed. If the joint is to be reused, a lever or clamp type splitter is preferred. The tool clamps onto the arm and threaded section of the joint. A bolt is tightened, which applies a force to push the joint free.

This clamp removes tapered ball joints[5]

Torque Wrench A good torque wrench is an essential piece of equipment. Many types are available but all work on a similar principle. Most are set by adjusting a screwed cylinder, which forms part of the handle. An important point to remember is that, as with any measuring tool, regular calibration is essential to ensure it remains accurate. Another tip is to reset the torque wrench to its lowest setting when finished, if the torque wrench is stored with it set above the minimum it will cause the internal spring to gradually weaken and will affect the accuracy. Torque sticks are also popular; a lot of tire stores use them.

Grease Gun A grease gun is a simple device that pumps grease under pressure. A special connector fits onto a grease nipple. Some types are air operated, but the one shown here is a simple pump-action type.

Some kingpins and ball joints can be lubricated[5]

Wheel Balancer Most wheel balancers offer options for measuring the wheel, and then programming the information into a computer. The wheel is clamped to the machine and spun. Sensors in the machine determine the static and dynamic balance. A display indicates where the wheel weights should be placed to obtain an accurate balance. 'On-car' balancers have been used but are less accurate than the later computerized types.

Balancer[5]

Many types of changer are available[5]

Tire Changer It is possible to change tires with two levers and a hammer! However, it is much quicker and easier with a tire changer. A lever is still needed to start the bead of the tire lifting over the rim. An electric or pneumatic motor drives the wheel around as the tire is removed or reinstalled. Most changers incorporate a bead breaker.

Tire Inflators This is a simple but important piece of equipment. Make sure it is taken care of, so the gauge remains accurate. A small difference in tire pressure can have a significant effect on performance and wear of the tires.

The gauge must be accurate[5]

Read the previous section again and note down some key bullet points here:

-
-
-

Test Equipment

Introduction Some special test equipment is used when working with driveline components. Remember, you should always refer to the manufacturer's instructions appropriate to the equipment you are using.

Refer to manufacturer's instructions

Tracking Gauges The toe-in and toe-out of a vehicle's front wheels is very important. Many types of tracking gauges are available. One of the most common uses a frame placed against each wheel with a mirror on one side and a moveable viewer on the other. The viewer is moved until marks are lined up and the tracking can then be measured.

Mirror gauge

Alignment Equipment Alignment equipment can vary in complexity from simple "spirit level" gauges to complex laser systems. Examples of two types are shown here. On the complex systems, the principle is still very simple! Reflected light or a laser is used to set a perfect rectangular shape. How the position of the wheels deviates from this is shown on an LCD display or a graduated scale.

Simple camber gauge

Complex optical alignment system

Turntables Turntables allow the wheels to swivel when carrying out tests or alignment checks. Some types are simple greased plates! However, for detailed work, turntables with markings in degrees are used. Checks such as toe-out on turns are carried out on turntables.

Turntables allow the wheels to swivel

Shock Absorber Tester A visual test is usually adequate to test shock absorber operation. However, equipment is available to test shock absorbers on the vehicle. A box is mounted on the vehicle corner; the suspension is compressed and then allowed to settle. The equipment, in some cases, will produce a chart similar to the one shown here.

Shock absorber test results

General Wheel and Tire Tools A good torque wrench is necessary for the correct setting of wheel nuts or bolts. The correct depth of tread means the vehicle will be significantly safer to drive - particularly in wet conditions. Accurate adjustment of pressure is equally important. Impact sockets are used in conjunction with an air gun. Do NOT use ordinary sockets with impact air tools.

Torque wrench[5]

Depth gauge[5]

Pressure gauge[5]

Impact socket[5]

Balancer Operation There are many different types of wheel balancers. The principle is the same, but each type will operate in a slightly different way. Do not use this type of equipment unless you have been trained in its operation.

Accuracy To ensure measuring equipment remains accurate, there are two simple guidelines:

Look after the stuff – test equipment thrown on the floor will not be accurate.

Ensure instruments are calibrated regularly - this means being checked against known correct equipment.

Basic alignment gauges

Read the previous section again and note down some key bullet points here:

-
-
-
-
-

Customer Care

Regular Checks Regular servicing is vital for a customer's safety. Carry out checks at all services and report your findings to the customer. Advise customers if anything will need attention before the next scheduled service interval.

Vehicle Condition Respect your customer's vehicle and take precautions to keep it clean. Repairing or checking some systems is likely to involve you working under the vehicle and then sitting in the driver's seat. Use seat covers and ensure the steering wheel is clean when you have finished.

Keep Customers Informed Some customers like to know details of what work has been done to their vehicle – and they have every right to know! Keep components that have been replaced so that the customer can inspect them, if required. Be willing to explain why parts were changed, if necessary. This ball joint was renewed because it had excessive freeplay.

Springs and Shock Absorbers The way your customers use their vehicles will determine how much work will be required on the suspension system! A vehicle used off road is more likely to wear the springs and shock absorbers. This is particularly so if the vehicle is not designed for off road use! You may need to explain this to your customers. Regular inspections of the system may be necessary in this case.

Describe a method of

Checking the suspension system

Lowering the Suspension Some customers will want you to advise them about lowering the suspension on their vehicle. This is an area where you should be very cautious! Lowering the vehicle can make it look good, but the performance of the steering and suspension will change – not necessarily for the better. Recommend to your customer that only parts designed specifically for their vehicle should be used. If not, there is a danger of damage to the vehicle. The insurance may also become invalid. Take care!

This car could not be lowered by much[2]

Hard Springs and Soft Springs Suspension is always a compromise between comfort and performance. Fitting harder springs and stiffer shock absorbers, for example, can improve the way a vehicle handles, but it will be a harsher ride. Softer springs will improve the ride comfort but handling may not be as good. Explain these issues to your customer if necessary.

Hard springs

Test Driving Take customers on a test drive if necessary. This is a useful way for them to describe problems to you. Alternatively, they could drive and demonstrate what is concerning them. Problems like steering wander can be diagnosed easily in this way.

System Operation Explain how systems work when customers express an interest. You will probably not need to go into detail. However, saying for example, that the engine drives a pump and that this forces fluid into a ram, which then pushes the steering, would be a good way to explain power assistance!

Advise Customers If you notice any unusual tire wear patterns, they may be caused by driving technique. If your customer asks about why the tires have worn, you may need to explain. Remember to be tactful!

Show customers tire wear patterns

Long Journeys If a customer uses the vehicle for many long journeys, they should be advised to check the tire treads and pressures regularly. Tire pressures can have a significant effect on vehicle handling.

High Speed Use Manufacturers may have different tire pressure settings for a vehicle that is used at high speeds. Talk to the customer and advise them of this if necessary.

Setting tire pressure

Spare Wheel and Tire The spare wheel and tire are often overlooked during a service. Make sure you check the condition and pressure. Report any faults to the customer. Some manufacturers recommend that the pressure of a spare tire be kept slightly higher than normal. Show the customer how to access and remove the wheel if necessary.

Spare wheel in position

Spare wheel clamp

Driving Style 💻 Driving style can have a significant effect on the life and condition of a tire. Driving the car over curbs, for example, can damage the tire and the wheel. High speed cornering can accelerate tire wear. Spinning the wheels can have a similar effect.

Tread Patterns Tread patterns vary, depending on the intended use for the tire. Advise the customer of this as required. A car with mud and snow tires installed, for example, would perform well in soft conditions. However, it is likely to produce tire noise on the road under normal conditions.

Mud and snow

Standard

High performance

Bald!

Summary A customer who is kept informed and treated with respect will return and keep you in a job! Explain things to a customer when asked – it will be appreciated.

Read the previous section again and note down some key bullet points here:

-
-
-
-
-

Theory and technology

Introduction to Steering

Development of Steering Systems The development of steering systems began before cars were invented. On early cars, the entire front axle was steered by way of a pivot (fifth wheel) situated in the center of the vehicle. The steering accuracy was not very good, tire wear was significant, and there was a serious risk of overturning.

Early vehicle[2]

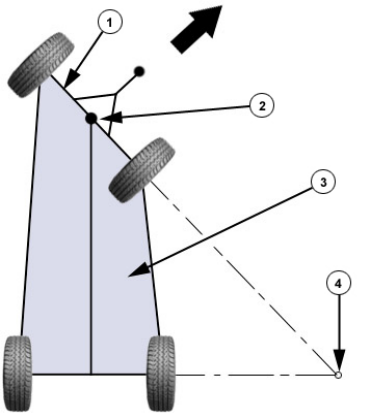

F

ifth wheel steering[1]

Ackermann In 1817, Rudolf Ackermann patented the first stub-axle steering system in which each front wheel was fixed to the front axle by a joint. With the wheel on the outside of the curve, this made it possible to cover a larger curve radius than with the front wheel on the inside of the curve.

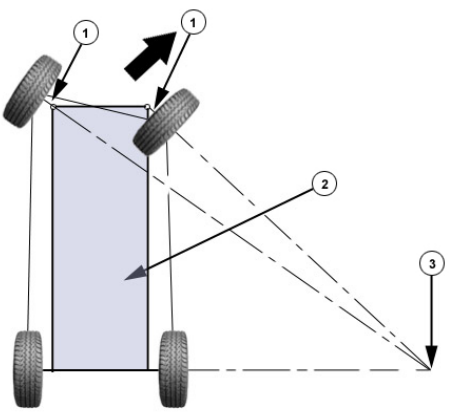

Ackermann steering[1]

Rack and Pinion Steering Rack and pinion steering was developed at an early age in the history of the car. However, this became more popular when front-wheel drive was used more, since it requires little space and production costs are lower. The first hydraulic power steering was produced in 1928. However, because there was no great demand for this until the 1950s, the development of power-steering systems stagnated.

Steering rack

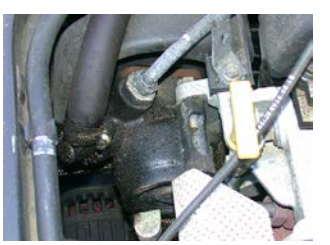

Power steering pump

Power-Steering Systems Increasing standards of comfort stimulated the demand for power-steering systems. Speed-sensitive or variable-assistance power steering (VAPS) systems were developed using electronic controls. These represent the latest major innovation to the steering system in production vehicles. The demand for safety and comfort will lead to further improvements in steering systems.

Some Ford systems use VAPS[2]

Volvo Concept[2]

The Necessity for Steering Systems Motor vehicles are generally steered via the front wheels, with the rear wheels following the front wheels on a smaller radius. With motor vehicles, two factors have to be taken into account:

1. Dead weight or axle loading

2. The contact area of the steered wheels.

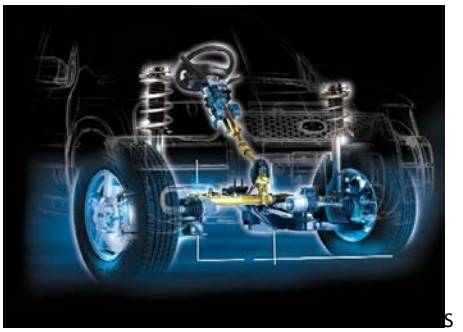

S

teering components[2]

Friction Forces In order to overcome the friction forces more easily, many types of steering gear have been developed. Power steering, in particular, reduces the effort required and increases the safety and comfort. Steering systems must be capable of:

Automatically returning the steered front wheels to the straight-ahead position after cornering (self-centering action)

Translating the steering wheel rotation so that only about two rotations of the steering wheel are necessary for a steering angle of about 40 degrees.

Self-centering action

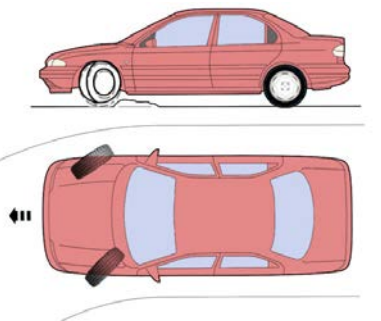

Suspension and steering interact[1]

Steering and Suspension Steering and suspension must always be regarded as a unit. If the suspension system is not working correctly, it will have a considerable influence on the vehicle's steering characteristics. For example, defective shock absorbers or dampers reduce the wheel contact with the road, limiting the ability to steer the vehicle. The driving safety of a motor vehicle depends largely on the steering. Reliable steering at high speeds is required, together with easy maneuverability.

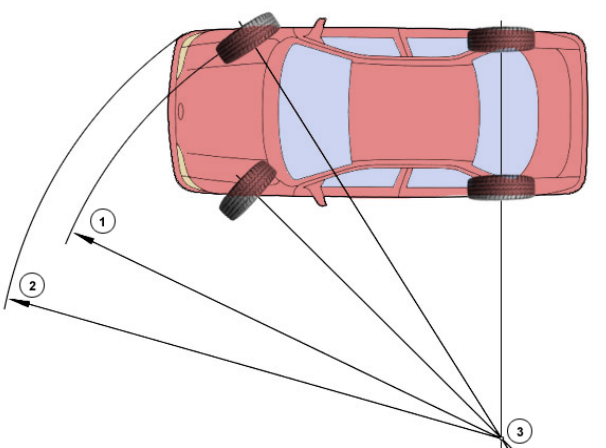

Front axle geometry[1]

Maneuver-ability Crucial to the maneuverability of a motor vehicle is the turning circle, which in turn is directly dependent on the track circle. Designers strive for the smallest possible track and turning circle. The wheel housing should enclose the wheels as tightly as possible; however, sufficient clearance must be left so that the tires do not rub when the wheels are turned.

Stub-Axle Steering In this type of steering, the stub axle of the steered front wheel is swiveled around the steering axis. When steering, the wheelbase remains constant. The space between the steered wheels can be used for the installation of deep-seated components such as the engine. The low center of gravity contributes to road-handling characteristics. Even at large steering angles, the stability of the vehicle is maintained since the area of support is only slightly reduced.

Steering movement

Steering Trapezium The "Trapezium" name is derived from the geometrical shape, which the two steering arms and the track rod form with the front axle. The stub axle and steering arm are firmly connected to one another. The stub axles are swivel mounted on the kingpins or in ball joints. Track rod and steering arms are moveably connected to one another. When in the straight-ahead position, track rod and front axle are parallel. When cornering, the stub axles are swiveled, thereby turning the front wheels. With the front wheels turned, the track rod is no longer parallel to the front axle. This results in the inside front wheel being turned more than the outside front wheel.

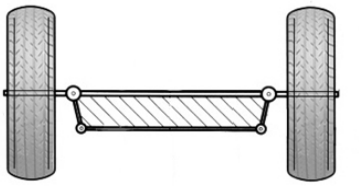

Fundamentals of the Ackermann system

State the purpose of the Ackerman linkage

Read the previous section again and note down some key bullet points here:

-
-
-
-
-

Steering Racks and Boxes

Construction of the Steering System In order to transmit the steering movements of the driver to the wheels, several components are required. The steering movement is transmitted by way of the steering wheel, shaft, gear and linkage to the front wheels. The rotational movement of the steering wheel is transmitted via the steering shaft to the steering pinion in the steering gear. The steering shaft is supported in the steering column tube, which is fixed to the vehicle body.

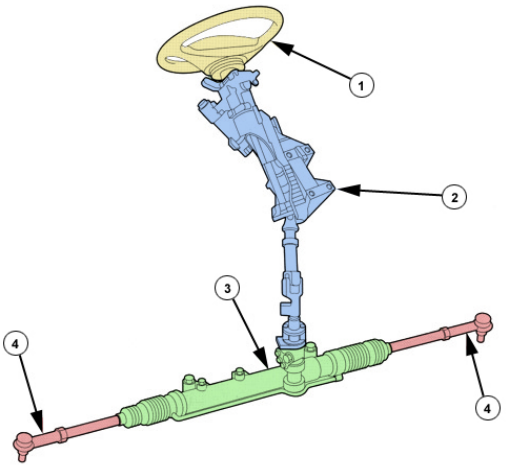

Ford steering system[1]

Steering Gear The steering gear translates (reduces) the steering force applied by the driver. It also converts the rotational movement of the steering wheel into push or pull movements of the track rods. The converted movement is transmitted to the linkage, which in turn moves the wheels in the desired steering direction. Track rods are required to transmit the steering movement from the steering gear to the front wheels. Different track rods are used depending on the type of front axle.

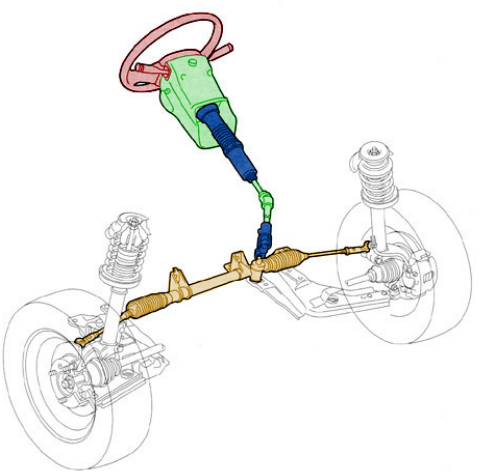

Steering system[1]

One-Piece Track Rod Moved by Drop Arm This is the simplest design of steering linkage, needing only three joints. One-piece track rods are found only with rigid axles since the distance of the steering swivel pins or joints cannot vary.

One-piece track rod

Two-Piece Track Rod Moved by Drop Arm Two-piece track rods may be split centrally or to one side. They are necessary on vehicles with independent suspension, since the suspensions of the steered wheels are compressed independently of one another. The split reduces the effect of bump steering.

Two-piece track rod

Two-Piece Track Rod Moved by Rack In this type of steering, frequently fitted to light vehicles, the steering linkage is operated by the rack of a rack-and-pinion gear. Two designs are encountered. The rack either forms part of the track rod or acts directly on the split track rod.

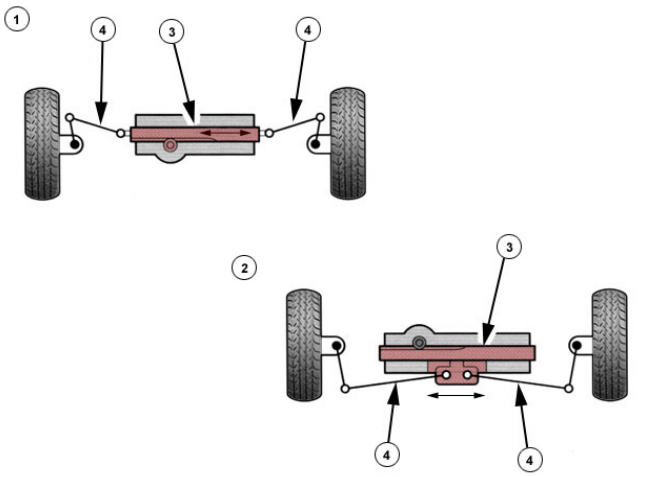

Two-piece track rod

Kingpin The kingpin is the predecessor of the ball joint. It is only fitted in commercial vehicles and a few off-road vehicles, since these generally have rigid front axles in which the distances of the track rods do not vary. The kingpin is not maintenance-free: It must be supplied with grease via a grease nipple.

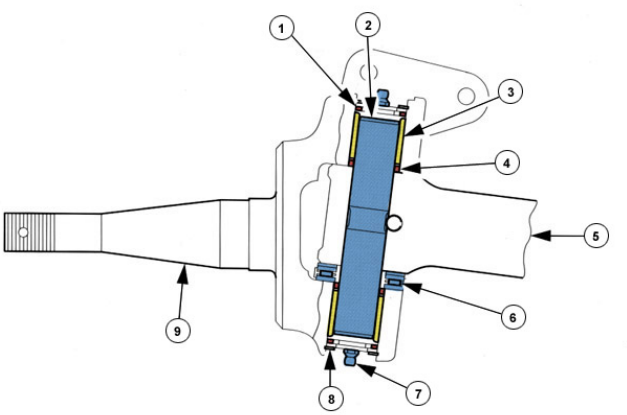

Kingpin on a steered front axle[1]

Ball Joint Ball joints allow parts of the steering linkage to rotate around the longitudinal axis of the ball joint. They also allow limited swivel movements transversely to the longitudinal axis. The lubricated ball pivot is supported in steel cups or between preloaded plastic cups. A gaiter prevents lubricant losses. Ball joints are generally maintenance-free and must always be replaced with new ones if the gaiter is damaged.

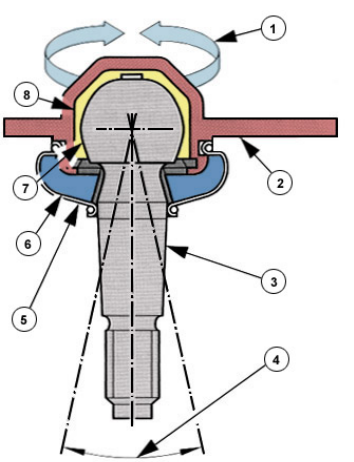

Ball joints are used instead of kingpins[2]

Worm and Nut Steering Gear This system consists of a steering screw on which the steering nut is displaced axially as the steering wheel is moved. Slide rings on the circumference of the steering nut transmit the movement to the steering fork and thereby to the drop arm. The drop arm performs a movement of up to 90 degrees. In this type of steering, the wear is relatively high. The steering nut play cannot be adjusted, and this is a disadvantage. With this type of steering gear, the steering is linear.

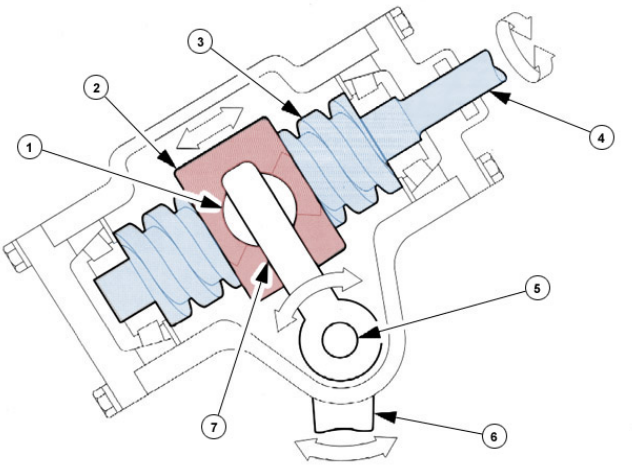

Screw and nut steering box[1]

Recirculating Ball Steering Gear Owing to the high friction in the screw and nut steering gear, gears with roller friction have become more common. In the recirculating ball steering gear, the steering screw and steering nut have ball groove threads. The threads do not touch one another because they form channels for the balls. When the steering screw is turned, the balls roll in the ball groove thread in two closed recirculating ball races. The balls are returned by two tubes. The drop arm is moved by means of a gear sector. The advantage of the recirculating ball steering gear is that it functions virtually free of wear.

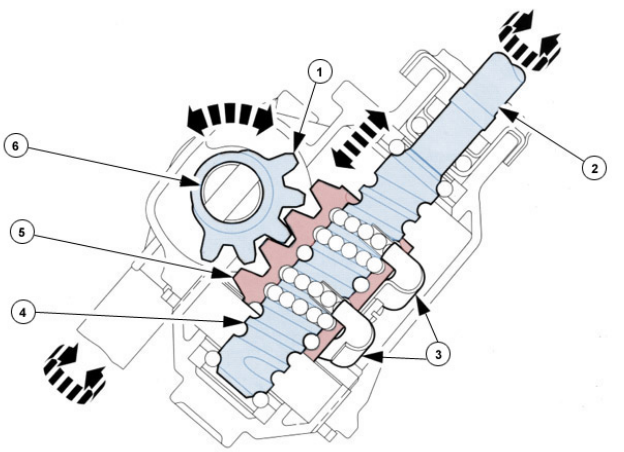

Recirculating ball system[1]

Worm and Sector Steering Gear The worm and sector steering gear has a cylindrical worm, which, due to its screw motion, turns a steering sector back and forth. The drop arm is fixed to the sector. It can perform a swivel movement of up to about 70 degrees. Worm steering gears are characterized by high transmission ratios, for example 22:1. One disadvantage is the high wear due to the sliding friction between the sector and the cylindrical worm. In addition, it requires large steering forces. In this type of steering gear, the steering is linear.

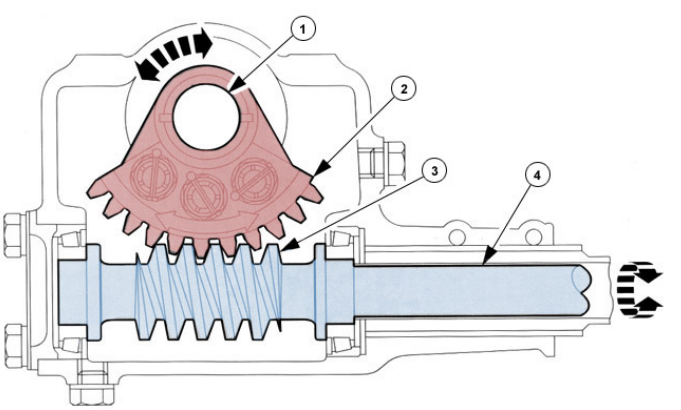

The sector moves with the worm[1]

Worm and Roller Steering Gear The worm and roller steering gear has a roller instead of the sector. The steering worm is not cylindrical but tapers toward the middle like an hourglass. The roller, driven by the worm, can thus perform a steering movement around its center when the steering wheel is turned. The drop arm can perform a swivel movement of up to 90 degrees. Advantages include low wear, ease of steering and that a small space is required. The steering play can be adjusted and the steering is free of play when running in a straight line. With this type of steering gear, the steering is linear.

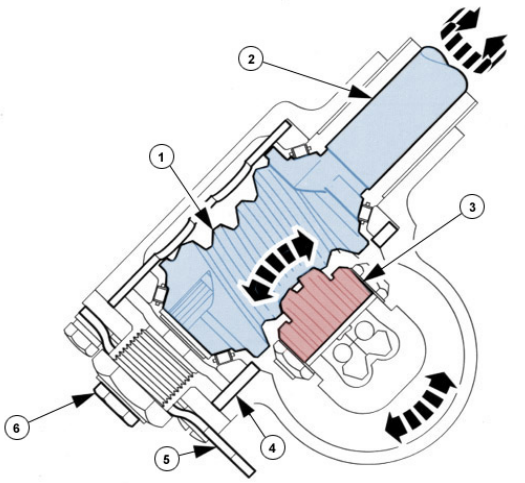

The roller moves with the worm[1]

Worm and Rolling Finger Steering Gear The worm and rolling finger steering gear has a cylindrical screw with an uneven thread pitch. When the worm is rotated, the tapered rolling finger rolls on the flanks of the worm. The rolling finger is displaced. This movement is converted by the shaft into a swivel movement of the drop arm. This system has low wear and ease of steering. The longitudinal play of the worm and the shaft, and the play between rolling finger and worm thread, are adjustable. In this type of steering gear, the steering is progressive due to the uneven thread pitch on the worm.

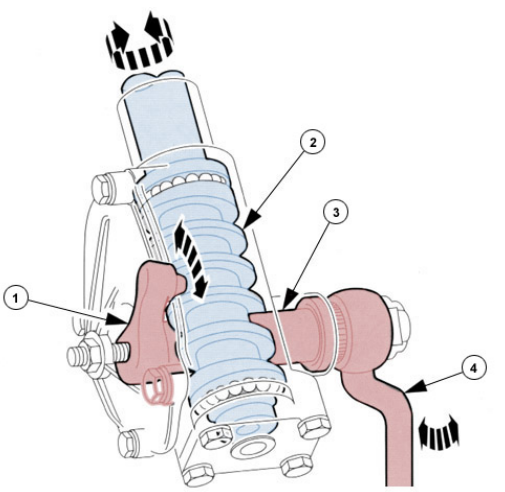

Progressive steering box[1]

Rack and Pinion Steering The steering rack housing generally contains a helically-toothed pinion, which meshes with the rack. By turning the steering wheel and hence the pinion, the rack is displaced transversely to the direction of travel. A spring-loaded pressure pad presses the rack against the pinion. For this reason, the steering gear always functions without backlash. At the same time, the sliding friction between pressure pad and rack acts as a damper to absorb road shocks. Advantages of rack and pinion steering include the shallow construction, the very direct steering, the good steering return and the low cost to manufacture.

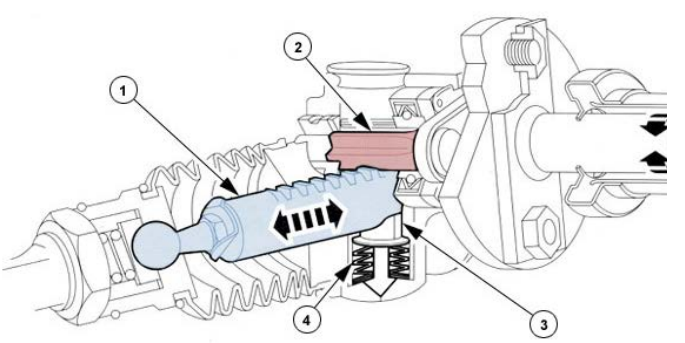

Linear steering rack[1]

Variable Pitch Rack The basic construction and the advantages are similar to those of a rack and pinion steering gear with constant pitch. In a rack and pinion steering gear with variable pitch, a rack is used that has teeth that diminish in size toward the ends. This makes it possible to increase the transmission ratio constantly. This means, in practice, that more steering wheel turns but less effort is required to turn the wheels. As a result, the steering moves more easily when applying lock than when moving in a straight line. This makes parking considerably easier.

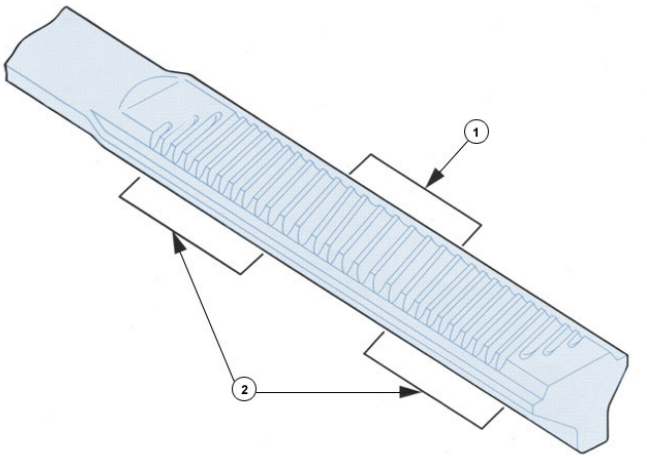

Progressive steering rack[1]

Summary There is a wide range of steering boxes and steering layouts. On light vehicles, the most common, by far, is the steering rack. This is because it has a shallow construction, is very direct, has good steering return and is relatively cheap to manufacture.

State the main advantages of rack and pinion steering.

Read the previous section again and note down some key bullet points here:

-
-
-
-

Introduction to Power Steering

Introduction The effort required to steer the front wheels depends primarily on the axle load. This is particularly apparent in the following situations:

Low speed

Low tire pressures

Large tire contact area

Tight cornering.

Low tire pressures

Steering Ratio Steering ratio cannot be increased too much because a large number of steering wheel turns would be necessary for the steering movement. Generally, a steering force of 250 N should not be exceeded. Therefore, the need arises for power steering in heavy cars, trucks and buses. Hydraulic pressures generally produce the power assistance. However, electric systems are now becoming popular.

Requirements of Power Steering The requirements of a power steering system are:

Precise onset of power assistance

Maintenance of driver feel

Continued ability to steer should the power system fail.

Steering in action[4]

Hydraulic Power Steering Hydraulic power-assisted steering (PAS) systems use an engine-driven pump to supply pressurized fluid. A control valve directs the fluid to a ram that assists with movement of the steering. If the fluid supply or ram fail, the steering works like a manual system.

PAS rack

PAS pump

Electric Power Steering Early electric power-steering systems used a motor to drive a hydraulic pump. It is now becoming common for the electric motor to act directly on to the steering rack, or the steering shaft.

Electric PAS

Four-Wheel Steering To understand four-wheel steering, it is first useful to recall or imagine the effects of rear-wheel steering. If you have ever driven, or watched the movement of a forklift truck, you will realize the different effect moving the rear wheels has on vehicle position. This is the same effect on a normal car when moving in reverse – it is why some drivers have trouble backing into a parking slot or out of a garage! The key point is that the trailing end of the vehicle tends to slew in the direction that the wheels are turned.

Direction of Movement When all four wheels are turned, the overall effect on the vehicle changes again. The effect varies depending on which way the rear wheels are moved. The effects could be described as a turn or a drift. At low speeds, the wheels are turned in opposite directions to improve the drag or slip on the tires as well as reducing the turning circle. At higher speeds, the wheels are turned in the same direction, such as for when changing lanes on a freeway. The amount of turn on the rear wheels is much less than on the front.

Drift

Turn

Four-Wheel Steering System The picture shows the layout of the components on one system currently in use. As is common with many if not all aspects of the vehicle, electronic control is now playing a role in four-wheel steering systems. This is used to determine the amount and direction of rear-wheel movement.

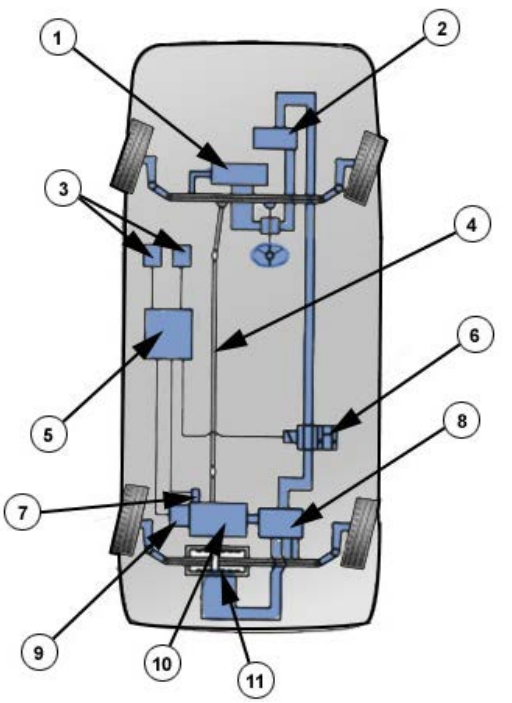

System Components

Summary Power assistance is used to make steering operation easier. This also improves safety. Two sources of “power assistance” are hydraulic and electric. Hydraulic systems are common, but the use of electric systems is increasing. Four-wheel steering systems improve vehicle handling, but are relatively complex and therefore add significantly to the cost of manufacturing the vehicle.

List THREE ways in which electric motor assisted steering systems operate

Read the previous section again and note down some key bullet points here:

-
-
-
-
-

Steering Geometry

Relative Steering Angle The wheels of a vehicle cover different distances when cornering. At low speed, optimum rolling of the wheels is only possible if the centerlines of the stub axles, with the front wheels turned, meet the extended centerline of the rear axle. In this case, the paths covered by the front and rear wheels have a common center. The inside front wheel must, therefore, be turned more than the outside front wheel. This is usually measured with the inside front wheel at a steering angle of 20 degrees.

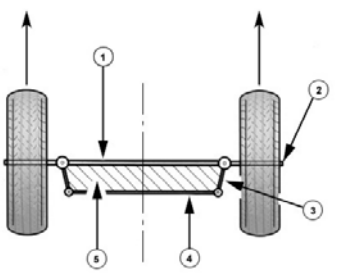

The Ackermann principle straight

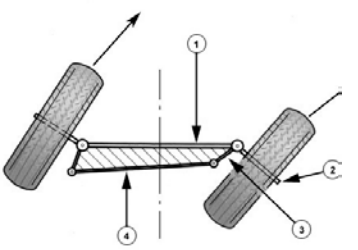

The Ackermann principle cornering

Wheelbase and Track The wheelbase is the distance between the wheel centers of the front and rear wheels. The track is the distance between the wheels, measured from tire center to tire center on the wheel contact plane. The greater the track and wheel base, the greater the driving safety, especially when cornering.

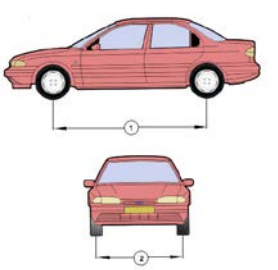

Safety is improved as these dimension increase[1]

Wheel Toe The wheel toe is the difference in the distance between the rim flanges in front of and behind the axle in the straight-ahead position. If the distance in front of and behind the axle is the same, the vehicle has zero wheel toe. There is generally some toe-in or toe-out. The wheel toe is given in millimeters or angular degrees and minutes. It is often referred to as tracking. Toe-in occurs when the distance between the rim flanges in the direction of travel is smaller in front of the axle than behind the axle. Toe-out occurs when the distance between the rim flanges in the direction of travel is greater in front of the axle than behind the axle.

Toe-In and Toe-Out The ideal running direction of the wheels is parallel to the vehicle's longitudinal axis. Due to deformations in the suspension elements, however, the front wheels are diverted from their ideal line. In the case of front-wheel drive, they are forced inward in the toe-in direction and in the case of rear-wheel drive, forced outward in the toe-out direction. Undesirable toe-out is counteracted by toe-in and undesirable toe-in by toe-out.

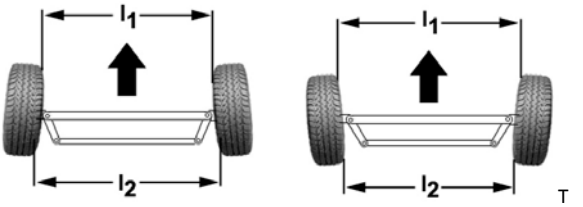

Toe-in

T oe-out

Camber Camber is the angle between the wheel plane and a line perpendicular to the road. The wheels must be straight ahead. Camber is described as positive when the wheel is inclined out at the top. It has the effect of reducing scrub radius and influences the wheel forces when cornering. Camber is described as negative when the wheel is inclined in at the top. It produces a good cornering force and allows the vehicle to have a lower center of gravity.

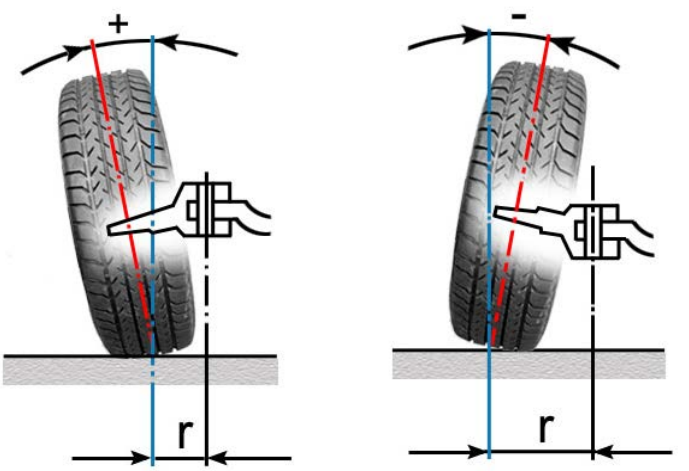

Positive camber

Negative camber

Scrub Radius The scrub radius is the distance between the contact point of the steering axis with the road surface plane and the wheel center contact point. The function of the scrub radius is to reduce the steering force, prevent shimmy and stabilize the straight-ahead position.

Wheel movement

Negative Scrub Radius When the point of contact of the steering axis with the road surface is between the wheel center and the outside of the wheel, it is termed negative scrub radius. The result of negative scrub radius is that the brake forces acting on the wheel produce a torque, which tends to turn the wheel inward. As a result, the wheel with the greater braking action is turned inwards, i.e. steered away from the more heavily braked side. This produces automatic counter-steer, stabilizing the vehicle.

Positive Scrub Radius When the contact point of the steering axis with the road surface is between the wheel center and the inside of the wheel, this is termed positive scrub radius. The greater the positive scrub radius, the more easily the wheels can be turned. The result of positive scrub radius is that the brake forces acting on the wheel produce a torque, which tends to turn the wheel outward. With a large positive scrub radius, the vehicle can be steered very easily. ”Disturbing” forces, such as different road surfaces, act on a long lever and can produce an unwanted steering angle.

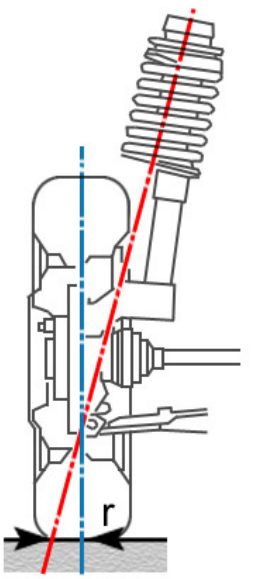

crub radius - Negative[1]

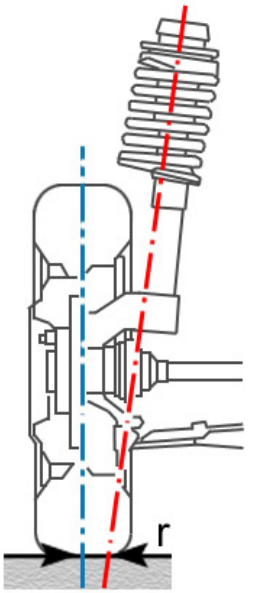

S

Scrub radius – Positive[1]

Zero Scrub Radius When the point of contact of the steering axis with the road surface is in the wheel center, the semi radius is zero. With a zero scrub radius, the wheel swivels on the spot. Steering is heavy when the vehicle is stationary, since the wheel cannot roll at the steering angle. In this case, no separate torques occur.

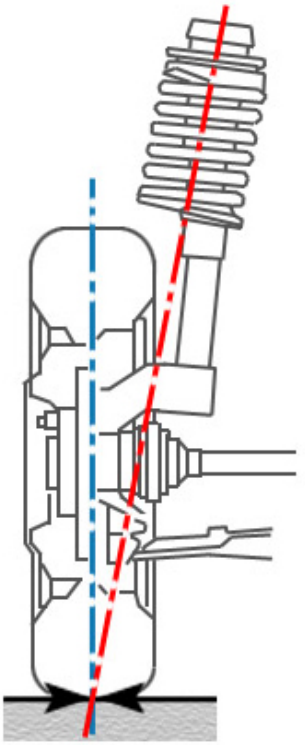

Scrub radius - Zero[1]

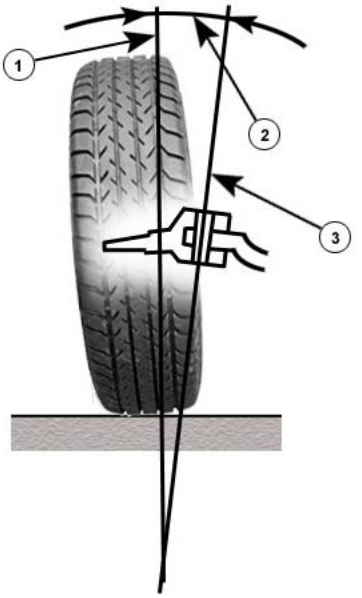

King pin or swivel axis inclination

Kingpin Inclination The kingpin angle is the angle between the steering axis and the perpendicular-to-the-road surface, viewed in the direction of travel. Scrub radius, wheel camber and kingpin inclination all influence one another. The kingpin inclination mainly affects the aligning torque, which brings the wheels back into the straight-ahead position. Due to the inclination of the steering axes, the vehicle is raised slightly at the front when the steering is turned. The weight of the vehicle, therefore, forces the wheels back into the straight-ahead position.

Effect of Kingpin Inclination If the wheels are turned, they move downward on the inclined plane. On the road, the wheels obviously cannot penetrate the road surface. Therefore, for the load condition on the road, this means that the vehicle is raised. This is counteracted by the weight of the vehicle. As a result, the steered wheels attempt to return to the straight-ahead position. This self-centering action increases with a greater kingpin angle. After cornering, the vehicle is steered back into the straight-ahead position due to this effect and the axle stabilizes itself.

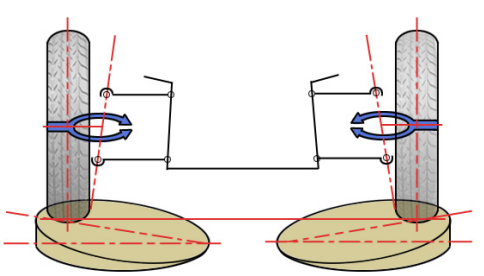

Inclined plane effect[1]

Uneven Road Surfaces Turning out of the straight-ahead position is made more difficult. This is an advantage when traveling over uneven road surfaces. The restoring forces of the kingpin inclination counteract the disturbing forces. They help the driver to hold a course without heavy counter steering. The steering, therefore, becomes smoother. This principle cannot operate if the scrub radius is equal to zero. In this case, the wheel turns on its contact point and does not raise the vehicle body. No steering return forces of any kind are generated. In such a case, the steering return forces are obtained by a positive castor.

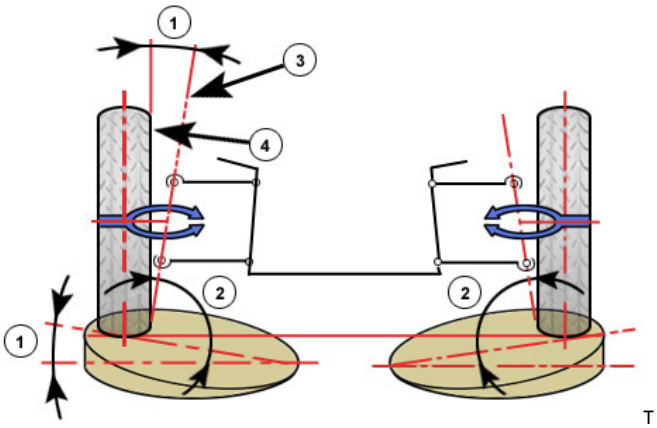

Theoretical ramps when the wheels are turned[1]

Positive Castor Castor angle is the angle in the vehicle's longitudinal direction between the steering axis and the perpendicular through the wheel center. The castor trail is the distance between the point of intersection of the steering axis with the road surface plane and the perpendicular through the wheel center. If the wheel contact point is situated between the point of intersection of the steering axis with the road surface in the direction of travel, the castor angle and castor trail is positive. Positive castor causes the wheels to return to the straight-ahead position. It influences the steering torque when cornering and the straight-ahead stability.

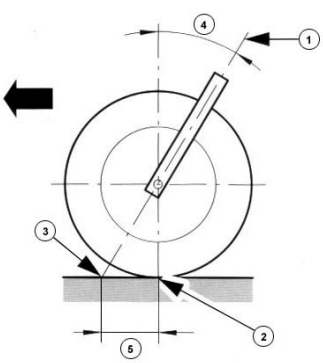

Castor angle - Positive[1]

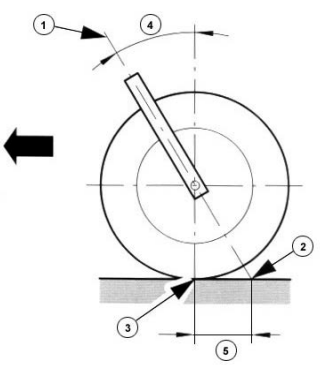

Castor angle - Negative[1]

Negative Castor If the wheel contact point is situated in front of the point of intersection of the steering axis with the road surface in the direction of travel, the castor angle and castor trail are negative. Negative castor – or at least only slight positive castor – is frequently present in front-wheel drive vehicles. This is used in order to reduce the return forces when cornering.

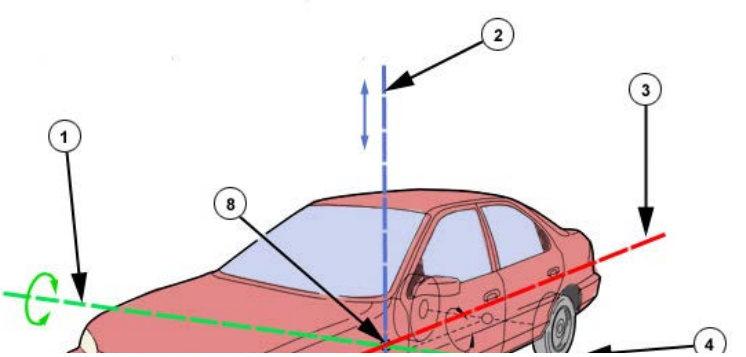

Forces transmitted by the tires[1]

Tires In order to allow the specially tuned suspension systems in today's cars to operate, there must be good contact between vehicle and road surface. Therefore, the tires are designed to:

Support the weight of the vehicle

Ensure good road adhesion

Transmit the drive, braking and cornering forces

Improve the ride comfort through good suspension

Achieve a high mileage.

Slip When drive force is transmitted at the contact area of a rolling wheel, a relative movement occurs between the tire and road surface. In this case, the distance covered by the vehicle is shorter than that corresponding to the rolling circumference. In other words, slip occurs. The slip percentage represents the difference between the distance covered by a wheel rolling without power transmission and the distance actually covered with power transmission. When braking with locked wheels, the slip is 100 percent. The slip varies as a function of drive, braking and cornering forces as well as the friction of tire and road surface.

Lateral Forces and Tire Side Deflection A tire can only transmit lateral forces when it is rolling at an angle to the direction of travel. For this reason, the tire does not roll straight ahead when cornering, but flexes laterally. Due to the flexing, the tire develops a resistance, or a side force, which keeps the vehicle on course. The side deflection of the tire is introduced by the camber and the toe-in of the wheels. It is necessary to transmit the lateral forces in order to absorb disturbing forces such as side winds or negative lift force. When cornering, the centrifugal force represents an additional disturbing force.

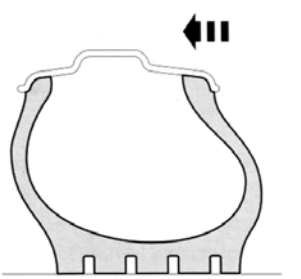

Tire under lateral force loading[1]

Slip Angle At higher cornering speeds, the centrifugal force drives the vehicle mass toward the outside of the curve. So that the vehicle can be kept on track, the tires must transmit cornering forces, which counteract the centrifugal force. This is only possible, however, if the tire flexes laterally. In so doing the wheels no longer move in their turned direction, but drift off at a certain angle from this direction. This means that the tire is running at an angle to the direction of travel. This angle, which occurs, between the tire's longitudinal axis and the actual direction, is the slip angle.

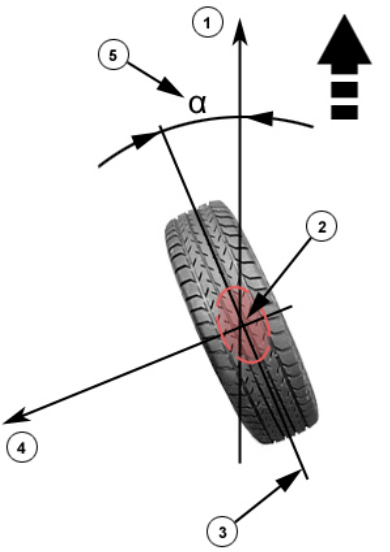

Representation of slip angle

Cornering Force Tires corner best at a slip angle of 15 to 20 degrees. The lateral adhesion depends on the slip angle, the wheel load and the type of road surface. Steering systems are generally designed so that on curves with radii of more than 20 meters, the two steered front wheels lie virtually parallel (that is not in accordance with the Ackermann principle). On curves with smaller radii, the angles of the stub axles differ significantly from one another, in accordance with the Ackermann principle. In high-speed corners, this adjustment leads to improved cornering of the wheel due to the greater turning of the outside front wheel.

Oversteer The centrifugal force acting at the vehicle's center of gravity is distributed to the front and rear wheels, according to the position of the center of gravity. This may result in a direction of travel, which deviates, from the desired direction of travel. A vehicle oversteers when the rear of the vehicle tends to swing outward more than the front during cornering. The slip angle is significantly greater on the rear axle than on the front axle. The vehicle therefore travels in a tighter circle. If the steering angle is not reduced, the vehicle tends to break away.

Understeer A vehicle understeers when the front of the vehicle tends to swing outward more than the rear during cornering. The slip angle is greater on the front axle than on the rear axle. The vehicle therefore travels in a greater circle. It must be forced into the bend with a greater steering angle. Vehicles with understeer can be carried out of the bend. Front-engined vehicles have a tendency to understeer, since the center of gravity is situated in front of the vehicle center.

Understeer

Oversteer

Explain why many front wheel drive cars have the wheels set to toe-out.

Explain what is meant by castor angle.

Read the previous section again and note down some key bullet points here:

-
-
-
-
-

Hydraulic Power Steering

Introduction Hydraulic power-assisted steering (PAS) systems use an engine-driven pump to supply pressurized fluid. A control valve directs the fluid to a ram that assists with movement of the steering. If the fluid supply or ram cylinder fail, the steering works like a manual system.

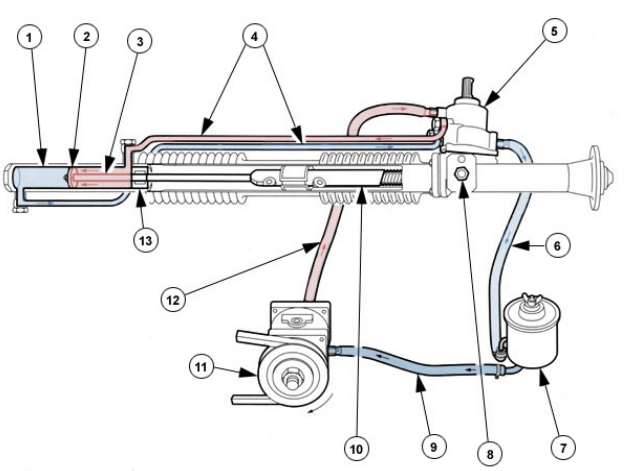

PAS system[1]

Modular System In power-assisted steering systems of modular design, parts of the steering gear take the form of a hydraulic piston and cylinder. This gives a compact construction.

PAS of modular design

Semi-Modular System In power steering systems of semi-modular design, an external hydraulic cylinder is fitted to the steering gear, which exerts its force on the steering linkage by way of connecting rods.

PAS of semi-modular design

Control Valve Most control valves incorporate a torsion bar. This is designed to twist by a small amount as steering force is exerted. As the torsion bar twists, it allows valves to open and close. These valves supply fluid under pressure to the appropriate side or the ram cylinder. Splines limit the amount of torsion bar twist. In the event of a failure of the hydraulic power assistance, the driver can steer the vehicle by purely mechanical means.

Neutral Position When the steering wheel is turned, the control valve is activated, which allows hydraulic fluid into the ram cylinder. Hydraulic fluid under pressure in the ram cylinder assists with the steering force exerted by the driver. Return hydraulic fluid flows through the outlet at the other end of the ram cylinder into the reservoir. When the steering movement is interrupted, the control piston assumes a neutral position. In this neutral position, the pressure in the ram cylinder is reduced.

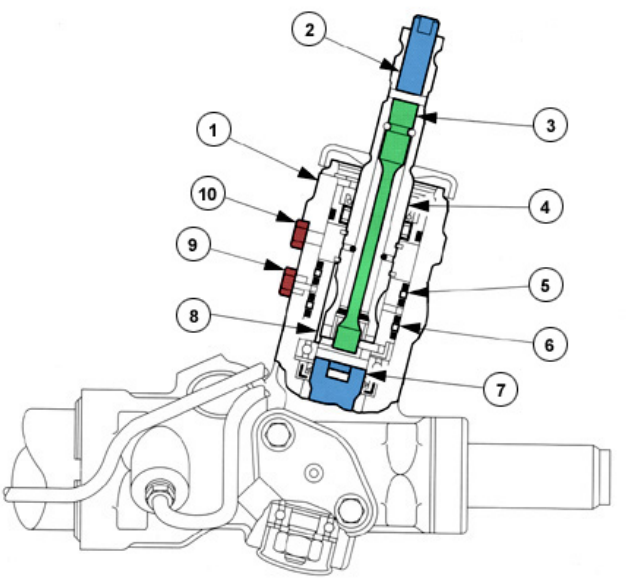

Steering rack control unit[1]

Fully Hydraulic Power Steering With fully hydraulic power steering, the wheel is no longer mechanically connected to the road wheels. Turning the steering wheel activates the control pump. The hydraulic fluid flowing through the control pump acts on the control valve. As a result, hydraulic fluid flows to one side of the ram cylinder, the return fluid flows from the other side of the ram cylinder to the reservoir, and the piston of the ram cylinder is displaced, thereby moving the steering linkage. When it is running in a straight line, the hydraulic fluid is delivered directly into the reservoir.

Safety Feature Fully hydraulic power steering is only fitted in slow-speed tractors and large construction machines. If the power steering pump fails, the ability to steer the vehicle must be ensured by an emergency steering pump, which is connected to the final drive assembly.

Construction

Variable Assistance Power Steering (VAPS) Variable Assistance Power Steering or VAPS is controlled electronically. Variable power steering (sometimes called progressive power steering) makes steering easier at low speeds and provides good driver feel at higher speeds. The main components are shown here.

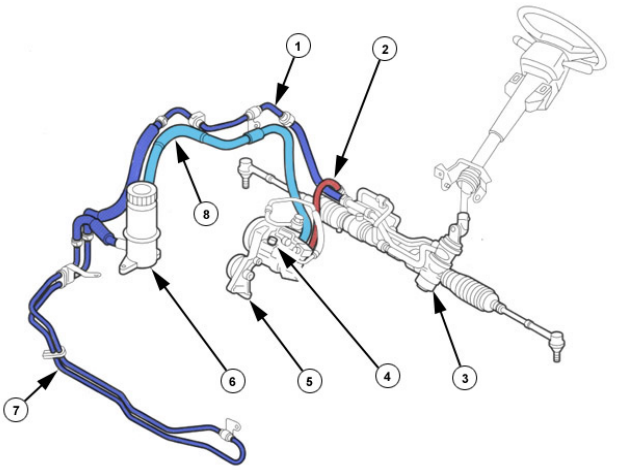

Steering system[1]

Steering Angle Sensor The electronic control unit monitors the signals from the vehicle speed sensor and the steering position sensor. From this data, it can then work out the power assistance required. The solenoid valve controls the amount of assistance because the valve, in turn, controls fluid pressure. Maximum power assistance occurs at speeds less than 10 Km/h (6 mph) or when the steering wheel is rotated more than 45 degrees.

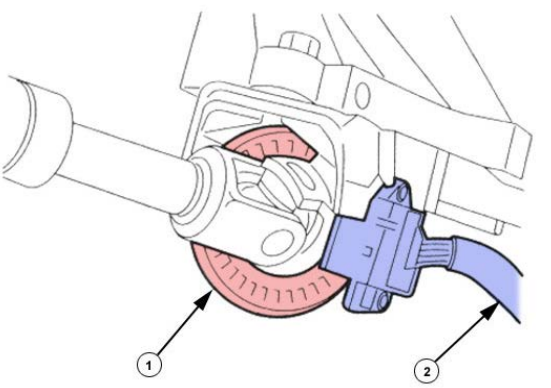

This sensor monitors steering position[1]

Control Module The VAPS electronic-control unit has an interesting feature. A slide switch on the side of the unit allows the following settings for the power steering:

Switch position 'H': 10 percent greater effort required when steering

Switch position 'N': normal adjustment

Switch position 'L': 10 effort less effort required when steering.

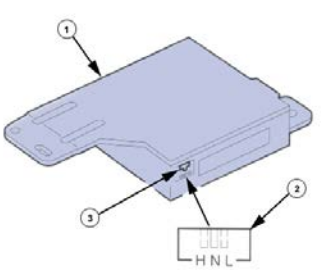

Control unit and switch[1]

Summary Hydraulic power-assisted steering (PAS) systems use an engine-driven pump to supply pressurized fluid. A control valve directs the fluid to a ram that assists with the movement of the steering. Variable assistance systems are used. These usually involve some electronic control. Progressive PAS is controlled in this way or by a restrictor valve that changes with road speed. Pressure switches, when used, often inform engine management systems that PAS is in use. This allows idle speed to be increased if necessary.

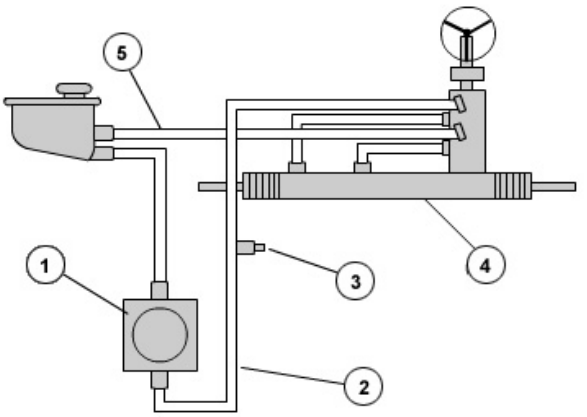

Hydraulic circuit[1]

Describe the basic operation of a hydraulic power assisted steering (PAS) system.

Read the previous section again and note down some key bullet points here:

-
-
-
-
-

Electric Power Steering

Introduction There are three ways of using electric power for steering assistance:

Replacing the conventional system pump with an electric motor while the ram remains much the same

Using a drive motor, which directly assists with the steering and has no hydraulic components

Employing active steering in which the steering wheel is replaced with a joystick.

Active steering

Conventional system

Electric Pump Motor The first of these systems is popular because the pump only runs when needed. This gives some savings in the fuel consumption and allows the drive belt arrangement at the front of the engine to be simplified.

Direct-Acting Motor The second system listed is now becoming the most common. An electric motor acts directly on the steering via an epicyclic gear train. This completely replaces the hydraulic pump and servo cylinder. This eliminates the fuel penalty of the conventional pump and greatly simplifies the drive arrangements. It also eliminates engine stall when the power steering is operated at idle speed.

Direct acting motor is becoming the most common

Optical Torque Sensor An optical torque sensor is used to measure driver effort on the steering wheel. The sensor works by measuring light from an LED, which is shining through holes. These are aligned in discs at either end of a torsion bar that is fitted into the steering column. An optical-sensor element identifies the twist of two discs on the steering axis with respect to each other, each disc being provided with appropriate codes. From this, the sensor, along with its corresponding electronics, calculates the torque as well as the absolute steering angle.

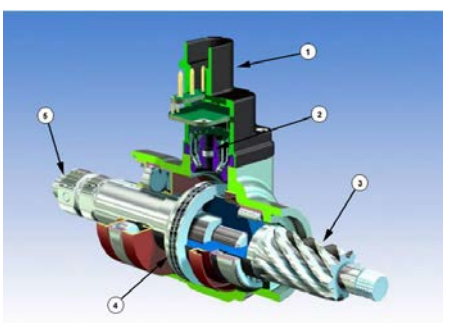
Bosch steering sensor[4]

Power Consumption This system occupies little space under the hood – something that is at a premium these days – and the 400 W motor only averages about 2A under city driving conditions. The cost benefits over conventional hydraulic methods are considerable.

Under hood space – or lack of!

Active Steering Active steering is the name given to a system developed by Saab from their experience in the aircraft industry. The technique is known as steer by wire. A joystick is used in place of the steering wheel, an array of sensors determines the required output, and, via the control unit, operates two electro-hydraulic control valves. The ECU filters out spurious data from the sensors and provides a feedback to the joystick in order to maintain driver feel.

Development of active steering [Saab]

Safety Features Electronic circuits have built-in self-test facilities and backup modules. Hydraulic fluid pressure is also held in reserve in an accumulator. Great benefit could be gained using this technique due to the removal of the steering column, although some opposition is expected to this radical approach! Disabled drivers, however, may consider this a major improvement.

Steering using a joystick [Saab]

Summary Electric power for steering assistance can be applied in a number of ways. However, using a drive motor, which directly assists with the steering, is becoming the most common. This method uses less power and takes up less space than other methods.

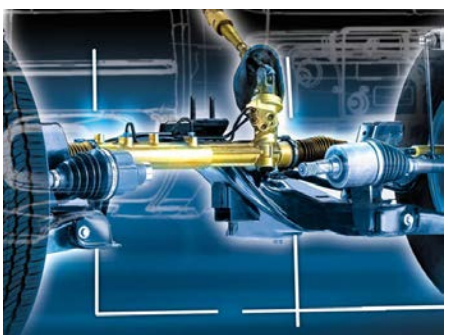
Hydraulic PAS will be in use for some time yet…[2]

List THREE ways of using electric power for steering assistance.

Read the previous section again and note down some key bullet points here:

-
-
-
-
-

Types of Wheels

Introduction Together with the tire, a wheel must support the weight of the vehicle. It must also be capable of withstanding a number of side thrusts when cornering, and torsional forces when driving. Wheels must be strong, but lightweight. They must be cheap to produce, easy to clean, and simple to remove and reinstall.

Spoked Wheels Spoked wheels are attractive but tend only to be used on older sports cars. They are a smaller diameter, but stronger version, of the bicycle wheel. These wheels must have tires with an inner tube. Spoked wheels allow good ventilation and cooling for the brakes but can be difficult to keep clean!

Good looking but difficult to clean!

Pressed Steel Wheels The center of this type of wheel is made by pressing a disc into a dish shape, to give it greater strength. The rim is a rolled section that is circled and welded. The rim is normally welded to the flange of the center disc. The center disc has a number of slots under the rim. This allows ventilation for the brakes as well as the wheel itself.

Standard wheel used on many cars

Steel Wheel Rim Features This type of wheel is strong and cheap to produce. The bead of a tire is made from wire, which cannot be stretched for fitting or removal. The wheel rim, therefore, must be designed to allow the tire to be held in place, but also allow for easy removal.

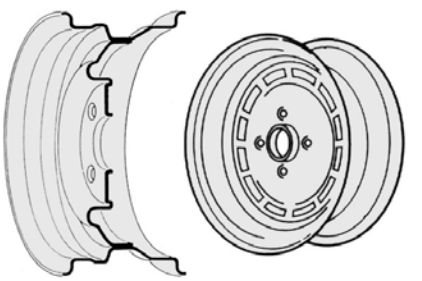

Standard wheel design

'Drop Center' Wheel To allow removal and installation a 'drop center' is manufactured into the rim. For tire removal, one bead must be forced into the drop center. This allows the other bead to be raised over the edge of the rim. The bead seats are made with a taper so that as the tire is inflated the bead is forced up the taper by the air pressure. This locks the tire onto the rim making a good seal.

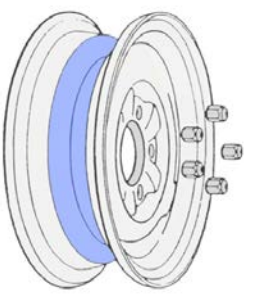

Wheel profile

Wheel Covers Steel wheels are a very popular design. They are very strong and cheap to produce. Steel wheels are usually covered with plastic wheel covers. Wheel covers are available in many different styles.

Wheel trims…

Come in…

Many shapes…

And sizes

Alloy Wheels Alloy wheels, or 'alloys', are good, attractive looking wheels. They tend to be installed on more expensive vehicles. Many designs are used and they are lightweight but can be difficult to clean.

Alloys…

Come in…

Many shapes…

And sizes

Cast Aluminum Wheels A large number of vehicles have wheels made from aluminum. Wheels of this type are generally produced from aluminum castings, which are then machine finished. Aluminum wheels can be easily damaged by striking curbs!

Damaged alloy wheel

Advantages of Aluminum Wheels The main advantage of aluminum wheels is their reduced weight, and of course, they look good. Disadvantages are their lower resistance to corrosion, and that they are more prone to accidental damage. The general shape of the wheel, as far as tire installation is concerned, is much the same as the stamped steel type.

Alloys…

Come in…

Many shapes…

And sizes

Split Rims Many commercial vehicles use split rims, either of a two or three-piece construction. The tire is held in place by what could be described as a very large circlip (snap ring). Do not remove or install tires on this type of wheel unless you have the proper equipment and training.

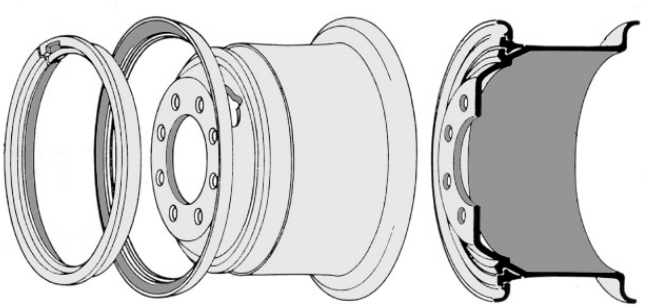
Do not work on split rims unless trained

Temporary or 'Space Saver' Spares In order to save space in the trunk, and to save on costs, some cars with large and expensive aluminum wheels use a small thin steel wheel as the spare. The speed of the vehicle is restricted when this type of wheel is used. It is only intended for emergency use.

Space saver

Explain why a 'well' is made into a wheel rim.

State THREE advantages of alloy wheels.

Explain why the bolts that hold divided rims are painted red.

Read the previous section again and note down some key bullet points here:

-
-
-
-
-

Wheel Rims and Fixings

Attaching the Wheels Light vehicle wheels are usually held in place by four nuts or bolts. The attaching holes in the wheels are stamped or machined to form a cone shaped seat.

Ten…

Six…

Five…

Four stud fixings

Wheel Nuts and Bolts The wheel nut or bolt heads fit into this seat. This ensures that the wheel fits in exactly the right position. In the case of the steel pressed wheels, it also strengthens the wheel center around the stud holes.

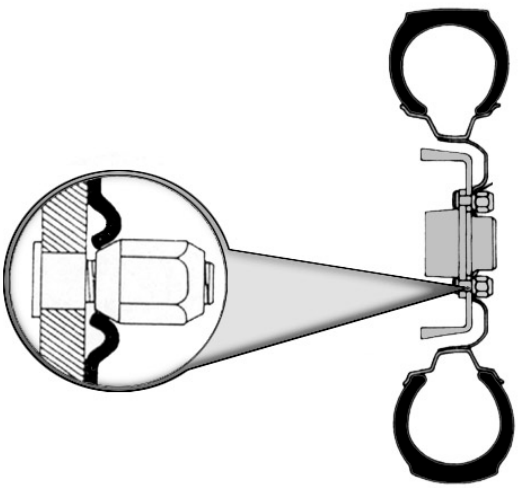
Wheel fixing

Installing a Wheel When installing a wheel, the nuts or bolts must be tightened evenly in a criss-cross sequence. It is also vital that they are set to the correct torque. Ensure the cone shaped end of the wheel nuts is installed toward the wheel.

Torque sequences

Wheel Rim Measurement Car wheel rim measurement consists of three main dimensions as shown. The rim diameter is the distance measured from one bead seat 180 degrees across the rim to other side of the bead seat. The rim width is the distance measured across the insides of the bead seats. It is not possible to accurately measure this when the tire is installed. The flange height can be determined by subtracting the nominal diameter, from the outside rim diameter.

Rim sizes

Types of Rims There are many types of car wheel rims. The picture shows a selection of those in common use. The arrows indicate the side of the rim over which the tire should be removed or installed.

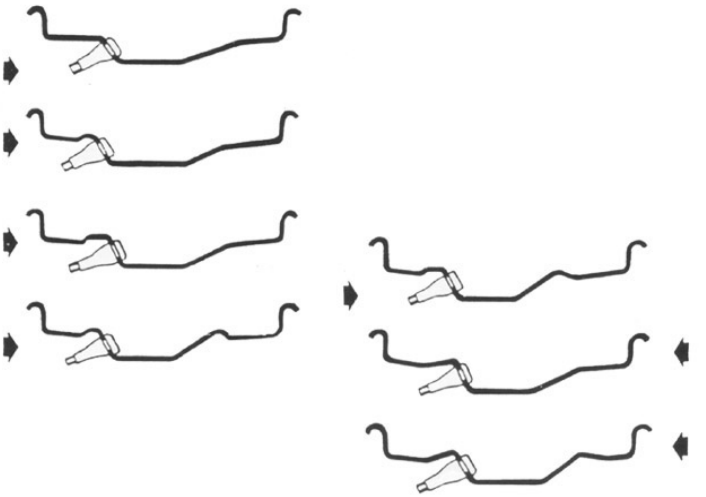

Rims and tire fitting directions

TR Rim The constant strive for better performance and safety led to the development of the TR rim profile by Michelin. The TR rim was developed for use with the TRX tire. This rim provides a better support for the tire bead, leading to improved road holding and steering. The low flange results in a reduced well depth. This allows better airflow around the brakes.

TR rim profile

TD Rim The TD rim was an additional development that allows some 'run flat' capability. Conventional rims, which have a well for tire removal and installation, also have the disadvantage that the tire can roll off the rim in the event of a puncture when driving. The TD rim prevents this by using two circumferential grooves into which the specially shaped tire bead fits. If a puncture occurs, the 'run flat' feature is intended to bring the vehicle to a safe stop, not for continued use. Modern versions of this tire are now in use. (Is the last sentence referring to the tire or rim?)

Modern tire

Rim and Wheel Markings Markings on the wheel rims are used to indicate the nominal and inside rim diameters. A code letter indicates the flange height, or whether the rim is a TR or TD profile.

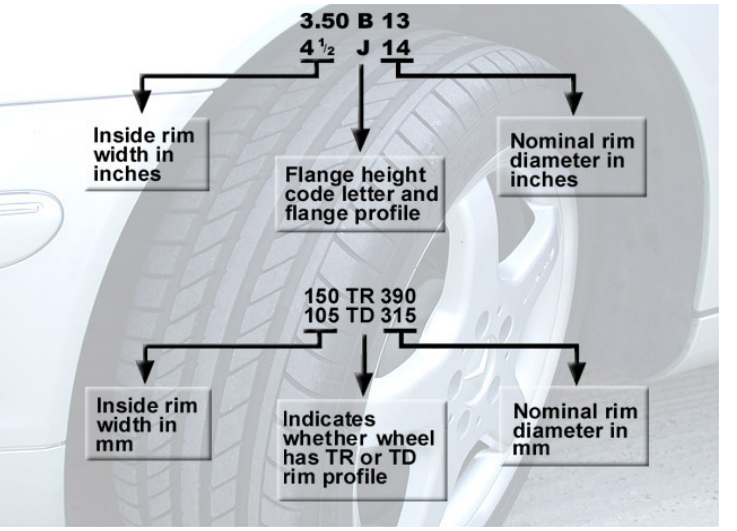

Marking details

Valves The valve allows the tire to be inflated with air under pressure, prevents air from escaping after inflation, and allows the release of air for adjustment of pressure. The valve assembly is contained in a brass tube, which is bonded into a rubber sleeve and mounting section.

Valve on a wheel

Valve Core The valve core consists of a center pin that has metal and rubber disc valves. When the tire is inflated, the center pin is depressed and the disc valve moves away from the bottom of the seal tube, allowing air to enter the tire. To release air, or for pressure checking, the center pin is depressed. During normal operation, the disc valve is held onto its seat by a spring and by the pressure of air. If all the air needs to be released, the valve core assembly can be removed. The upper part of the valve tube is threaded to accept a valve cap. This prevents dirt and grit from entering, and acts as a secondary seal.

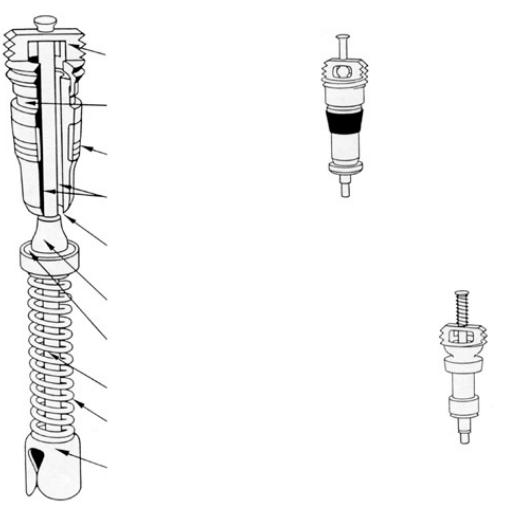
Details of the valve construction

Tubeless Valve Stem The tubeless valve core is the same as described previously. However, the valve stem body must be made so that when installed into the wheel, an airtight seal is formed around the stem. Wheel rims used for tubeless tires must be sealed and airtight. Most wheels and tires in use today are of the tubeless design.

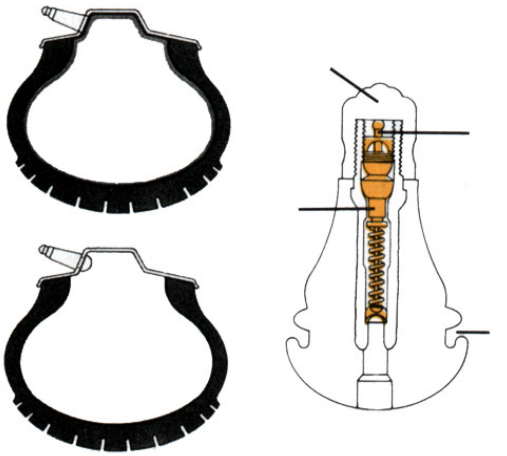

Tires and valves

Explain why the nuts or bolts must be tightened evenly in a diagonal sequence, when fitting a wheel.

Read the previous section again and note down some key bullet points here:

-
-
-
-
-

Tires Introduction

Basic Functions The tire performs two basic functions. It acts as the primary suspension, cushioning the vehicle from the effects of a rough surface. It also provides frictional contact with the road surface. This allows the driving wheels to move the vehicle. The tires allow the front wheels to steer and the brakes to slow or stop the vehicle.

Tires are the primary suspension component

Pneumatic Tires The tire is made from an inner layer of synthetic plies, which are wrapped around the bead bundle at the inner edges. The bead bundle holds the tire in position on the wheel rim. The plies are coated with rubber, which is molded to form the side walls and the tread of the tire. Behind the tread is the belt package, usually made of steel, rayon, or glass fiber. Modern tires are tubeless, so they also have an inner liner, a thin layer of rubber coating on the inside to form an air tight seal.

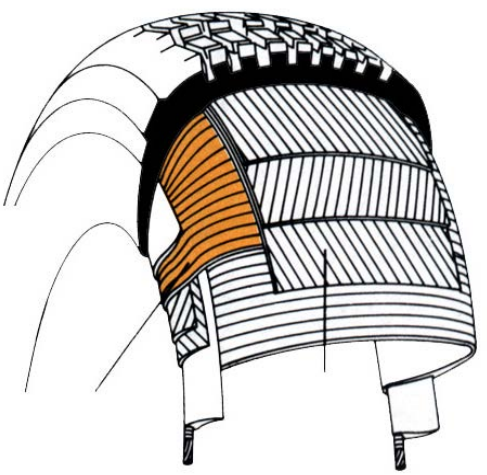

Pneumatic tire construction

Radial Tire Carcass An innermost sheet of airtight synthetic rubber performs the 'inner tube' function. The casing plies are made up of thin synthetic fiber cords, laid out in straight lines and bonded into the rubber. These cords are largely responsible for determining the strength of the tire structure. The casing plies of a car tire have about 1,400 cords, each capable of withstanding 15 kg. The ply turn-up anchors the casing plies to the bead bundle, and is responsible for transferring cornering and braking forces from the wheel rim to the road surface.

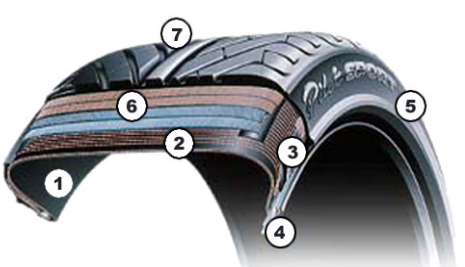

Tire carcass construction

Radial Tire Features Beads clamp the tire firmly against the wheel rim. The beads can withstand forces up to 1,800 kg. The tire has soft sidewalls, which protect the tire against impacts (with curbs, etc.) that might damage the carcass. There is also a hard rubber link between the tire and the rim. Body plies consist of oblique overlapping layers of rubber reinforced with very thin, but very strong, metal wires. The overlap between these wires and the carcass cables forms a series of non-deformable triangles. This arrangement gives great rigidity to the tire structure.

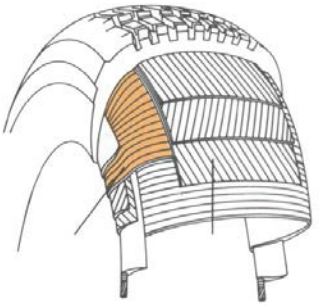

Radial tire make up

Tire Markings Markings on the sides of tires are quite considerable and can be a little confusing. The following is a list of the information given on modern tires. The size, speed and load ratings will be examined in more detail.

Markings used on tires

Size (E.g. P195/55R15)

Speed Rating (E.g. H, V, Z)

Load Index (E.g. 84, 89, 92,)

UTQG Ratings (Temperature, Traction, Tread wear)

M&S Designation

Maximum Load

Maximum Pressure

Type of Construction

EU approval mark

US approval mark

Manufacture Date

P-Metric Tire Sizes A tire's size is expressed in the format PWWW/AATDD (E.g. P195/55R15).

P is the tire type, P for passenger cars, LT for light truck applications and T for a temporary spare. WWW is the tire's section width (sidewall-to-sidewall) in millimeters (195). AA is the aspect ratio or profile (55). This gives the tires height as a percentage of its width. T is the construction type, R for Radial, B for Bias and D for diagonal. DD is the diameter of the wheel in inches (15).

Side of a tire showing markings

Older Tires For an older tire without an aspect ratio (E.g. 195R13), it is assumed to be about an 80 series tire (195/80R13). The practice of listing the aspect ratio is now more common. The speed rating was traditionally shown as a part of the tire's size (E.g. 195/55VR15). Since the inclusion of load ratings, many manufacturers now show the speed rating after the size, in combination with the load rating (E.g. 195/55R15 84V).

Side of a tire showing markings

Speed Ratings Commonly used speed ratings are shown in this table.

* Note that originally, V was 'over 130mph'. As W and Y ratings are now used, Z is redundant and will probably be dropped at some time in the future.

Check the latest figures and record them here

Load Index The load index indicates the maximum weight the tire can carry at the maximum speed indicated by its speed rating. Some 'Load Rating Indexes' are listed in this table.

Check the latest figures and record them here

Performance Tire Tread The type of tire tread shown here uses a directional pattern for improved water evacuation. The center rib gives improved steering control. Overall, this tire gives improved wet grip and reduced noise.

Directional pattern tread

Standard Tire Tread This tire is built for the cost conscious motorist. It saves fuel when installed all round because of a lower rolling resistance. The rubber compound used prolongs tire life. It has been made using environmentally conscious methods.

4x4 Tire Tread Most 4x4 vehicles use tires with a 'block' type of tread pattern. This gives the mix of performance required for road, and off road use. These tires are sometimes described as 'mud and snow'.

Mud and snow tread pattern

Racing Tires The rubber compound of a tire provides grip - not the tread. However, without the tread to disperse water, very little grip can be achieved. Formula 1 and other racing tires were at one time used without tread. These were known as 'slicks'. Nowadays, these high performance tires have some grooves to disperse water.

F1 tires in action for Jaguar[2]

Explain what is meant by the tire marking: 195/55R15 84V

Read the previous section again and note down some key bullet points here:

-
-
-
-
-

Tire Construction

Bias-ply Bias-ply tires are not used on any mass produced modern cars. However, the construction details are useful to show how tire technology has developed. This cut-away picture shows the construction of a bias-ply tire. Several textile plies are laid across each other, running from bead to bead in alternate directions. The number of plies depends on the size of the tire and the load it has to carry. The same number of plies is used on the body plies and the sidewalls.

Construction of a cross-ply tire

Plies The overlaid plies are embedded in interposed layers of rubber. This thick mass is subject to internal shearing movements. There is no difference between the sidewalls and body because each has the same plies.

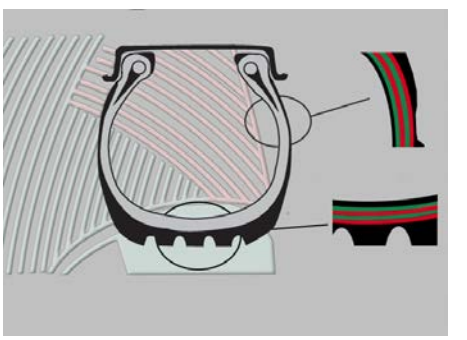

Plies embedded in layers of rubber

Layers Inside the reinforcing, a honeycomb of superimposed layers forms a grid with a square mesh. With a longitudinal pulling movement, each of the diamond shapes stretches and compacts easily.

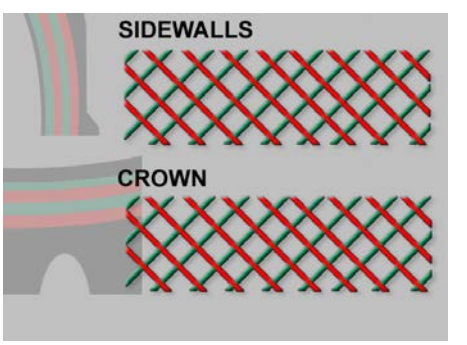

Honeycomb of superimposed layers

Friction This repeated deformation results in a lot of friction in the surrounding rubber. This friction leads to energy loss in the form of heat. Over time, this damages the tire and reduces its service life.

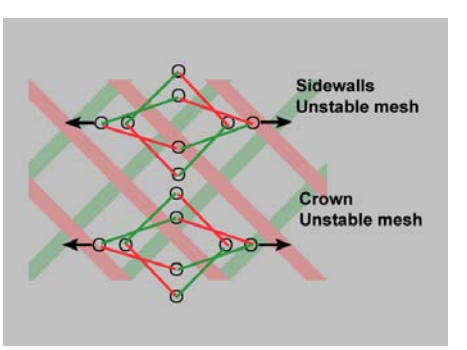

Deformation results in friction

Load Carrying When it is not carrying a load, the bias-ply tire presents a very rounded profile to the ground. Only a small elliptical area makes road contact. As load is applied, the tire flattens. The greater the load the more the shoulders flatten to the ground. The tread in the middle tends to lift up, and grip is reduced overall.

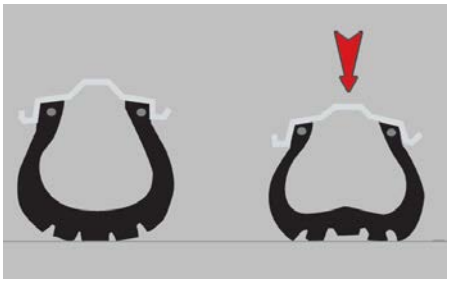

Cross-ply tire profile

Rolling When the tire is rolling along a straight road, and it undergoes a temporary overload, the contact area increases. Once the suspension takes the load, the contact area decreases again. The path of the bias-ply tire is therefore a succession of increasing and decreasing contacts. This changes with every bump in the road surface.

Lateral Force When subjected to a lateral force, the structure of the bias-ply tire cannot remain flat on the ground. This is because of its rigid sidewalls. One of the shoulders is compacted against the ground while the other tends to lose contact. This results in a strong drift effect.

Add notes about tread contact here

Radial Ply The radial design consists of a carcass ply formed by textile arcs running from one bead to the other. Each arc is laid at an angle of 90° to the direction the tire rolls. At the top of the tire a radial belt, made up of several plies reinforced with metal wire, is laid on top of the carcass ply. These radial plies, laid one on top of another, overlap at a 20 to 25 degree angle.

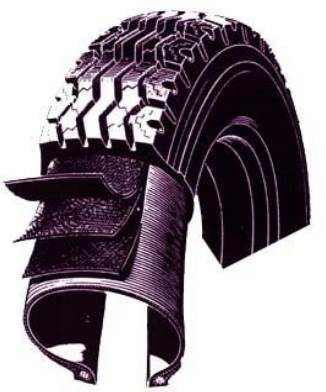

Radial architecture

Sidewall and Crown The thickness of the radial and carcass plies is different, so that the work of each part of the tire is more specialized. The sidewall reinforcing consists of a single thin layer of textile. The rubber covering of this reinforcing is also thin. At the crown, there is a textile reinforcing near the inside of the tire, overlaid with the belt of metal plies. This construction gives an inextensible crown and flexible sidewalls.

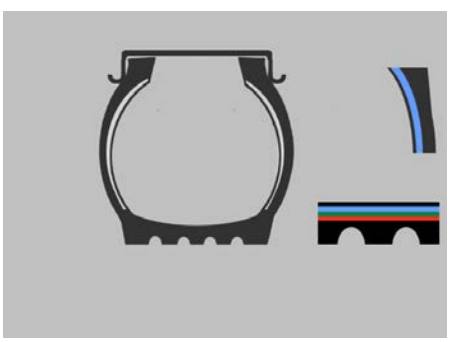

Thickness of the crown and sidewall

Sidewall In the sidewall of the radial tire, the arcs of the carcass ply, with its wires, are laid independently of each other and embedded in the rubber. The crown is made up of the arcs of the carcass ply, continuing up from the sidewalls, plus the metal wires of the crown plies. This forms a grid with a triangular mesh.

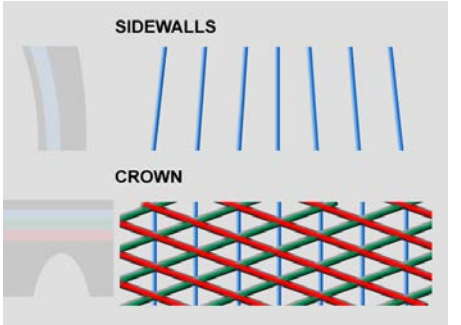

Sidewall and crown construction

Friction In the sidewalls, the shearing movement between the parallel wires is slight, and the rubber is not very thick. As a result, there is little friction, and less heat is generated. At the crown, the triangular mesh is virtually impossible to deform. The structure therefore maintains its equilibrium, and when rolling, spreads flat on the ground like a tank track. The tire lasts longer because there is less deformation.

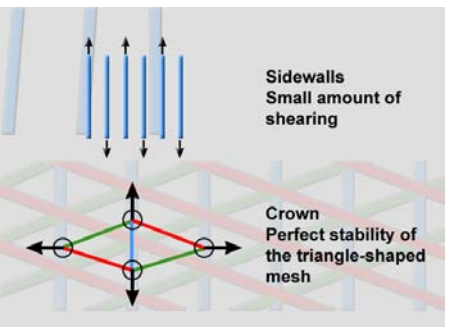

Friction is reduced

Load Even without a load, the radial tire is almost flat on the ground. The contact area is already very wide. As load is applied, this area grows longer without losing width. The tread blocks remain flat against the road surface and grip is at a maximum. When rolling, the flexibility of the sidewalls allows them to absorb many of the bumps.

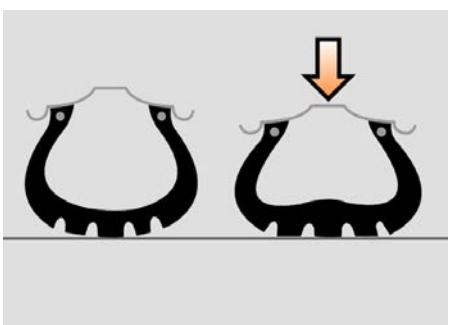
Contact remains constant

Contact Area When rolling, the width of the contact area remains constant. Only its length can increase under load. The width of its path, therefore, is not affected by uneven road surfaces. The radial tire functions like a tank track moving across the ground.

Contact Patch Since the sidewalls of the radial tire are very flexible, they stretch in proportion to the increase in force. The sidewall acts like a moving hinge between the wheel and the crown. This allows the crown to remain flat against the ground. The path of the tire therefore remains constant, even when subject to lateral forces.

Add notes about tread contact here

Describe what is meant by a tire contact patch.

Read the previous section again and note down some key bullet points here:

-
-
-
-
-

Functions of the Tire

Introduction Tires and cars have reached a high degree of development. Drivers, therefore, tend to forget that the tire is the only point of contact a vehicle has with the road. The tire has to bear the load, roll, steer, transmit forces, be long lasting and absorb shocks.

Steering The tire should steer the vehicle accurately, regardless of road and weather conditions. The car's ability to keep a straight path depends on the tire's ability to maintain its course. The tire has to absorb transverse forces without deviating from its trajectory. Each vehicle has a particular inflation pressure for the tires of each axle. By respecting the differences in pressure between the front and rear axles, the best driving accuracy can be obtained.

Vehicle Support The tire supports the vehicle when it is stationary. However, when it is in motion the tire must resist considerable load shifts during acceleration and braking. At times, a car tire has to carry over fifty times its own weight.

Tire on a stationary car

Road Shocks The tire absorbs road shocks to make life more comfortable for the driver and passengers. This also helps the vehicle components last longer. The main characteristic of the tire is its flexibility, especially in a vertical direction. The elasticity of the air in the tire enables it to withstand successive deformations, caused by obstacles and uneven road surfaces. Correct pressures ensure a reasonable degree of comfort, and maintain the correct steering capacity.

Braking and Acceleration The tire has to be able to transmit forces, such as the engine's power output during acceleration and the braking forces when the brakes are applied. How well these forces are transmitted depends on the quality of just a few square centimeters of tire in contact with the ground.

Tire Performance The tire must continue at its best performance level for millions of revolutions of the wheel. Wear patterns depend on how the tire is used, but especially on the quality of the ground contact. Tire pressure plays a major role because it affects the size and shape of the contact area. It also affects the distribution of forces to the different parts of the tire in contact with the ground.

Worn tire

New tire

Bias-Plies or Radial-Plies? Bias-ply tires are not used for many modern road vehicles. This is because of the clear advantages gained by radial construction. However, there are still some cross-plies out there. As a general guide, do NOT mix bias-ply and radial ply tires on the same vehicle. The different performance characteristics make this dangerous.

Radial

Cross-ply

Summary The functions of security, comfort, and economy must continue for the lifetime of the tire. The tire needs air in order to function correctly and be long lasting. Its inflation pressure must be checked regularly. This is because the air escapes, molecule by molecule, through the natural porosity of the rubber. It also escapes through accidental causes, such as leaks in the valve or at the rim, or slight damage to the tire. The wrong pressure adversely affects all its performance areas. Regular, quick checks can avoid many problems.

State which forces a tire has to transmit and withstand.

Read the previous section again and note down some key bullet points here:

-
-
-
-
-

Wheel Balancing

Introduction Correctly balanced wheels are an important comfort and safety issue. An out of balance wheel produces vibration and a reduction in steering control. It will also result in abnormal tire wear. However, the wheel and tire are not always to blame. Worn steering joints, wheel bearings, or driveshaft joints can also cause vibration.

Balance A wheel and tire may be out of balance either statically or dynamically. Static balance relates to a stationary wheel. Dynamic balance relates to the conditions of a rotating wheel.

Wheel with an out of balance mass

Static Balance A wheel and tire that is in perfect static balance has the mass evenly distributed around its center. When mounted on a free bearing and spun, it comes to rest in any position.

Static Imbalance A simple example of static imbalance is a bicycle wheel. When spun freely, it will always come to rest with the valve at the bottom. Static imbalance on a vehicle causes the wheel and tire to 'tramp' up and down. The effect becomes progressively worse at higher speeds. This puts a strain on the steering and suspension components.

Curing Static Imbalance To cure static imbalance a compensating mass, or masses, is placed on the wheel. One method places a large mass on the wheel flange. Another uses two smaller masses as shown. These methods are used because it is not normally possible to put an extra mass on the wheel center line.

Wheels that have been statically balanced

Dynamic Balance The term 'dynamic' is used because the effect is only noticeable when the wheel is in motion. This is felt, when driving, as a 'steering wobble'. It can be dangerous if excessive, and at the least, it results in premature tire wear.

Dynamic Imbalance Dynamic imbalance is best explained by imagining a crank, like the pedals of a bike, as shown here. If the weights are equal, and at the same distance from the bearing center line, it will be statically balanced. However, when the crank rotates, a force will act on each weight in an outwards direction. This will result in a twisting force on the bearing, which is described as a 'couple'. The direction of the 'couple' reverses every half turn, resulting in a rocking movement of the vehicle steering. The force increases with speed.

Car Wheel Dynamic Imbalance The wheel shown here has been statically balanced. Mass B has been added to compensate for the out of balance mass A. However, because the masses A and B are not in the same plane, a twist or couple will be set up. This will result in a dynamic imbalance.

Statically balanced but dynamically imbalanced

Curing Dynamic Imbalance The out of balance wheel, in the first picture, can be balanced in three ways as shown. Adding a weight on the center line is fine, but this can only be done on spoked wheels. Weight on one flange will only statically balance the wheel. Smaller weights on both flanges will result in a statically, and dynamically balanced wheel.

Out of balance wheels

Curing Static and Dynamic Imbalance In reality, an out of balance mass is usually away from the wheel center line. Static and dynamic imbalance occurs. To compensate for this, weights are added as indicated by a balancing machine. The weights may not be directly opposite the out of balance mass.

Weights A and B cure the imbalance due to M

Wheel Balancing Machine 💻 When a balancing machine is operated, the wheel is spun. The display shows the required masses and their positions on the wheel. Do not use this type of equipment unless you have been trained.

Balance Weights Small lead weights are used for correcting out of balance wheels. The weights clip onto the wheel rim, or are hidden on the inside of the wheel with an adhesive tape.

L

ead weights

Summary Correct wheel and tire balance is essential for safe operation of the vehicle. Excessive tire wear results from imbalance. A wheel must be balanced statically and dynamically. Modern wheel balancers will achieve both these requirements quickly and easily.

Describe the difference between static and dynamic wheel balance.

Read the previous section again and note down some key bullet points here:

-
-
-
-
-

Reasons for Suspension

Introduction The suspension system is the link between the vehicle body and the wheels. Its purpose is to:

Suspension plays a key role[2]

Locate the wheels while allowing them to move up and down, and steer

Maintain the wheels in contact with the road and minimize road noise

Distribute the weight of the vehicle to the wheels

Reduce vehicle weight as much as possible - in particular the unsprung mass

Resist the effects of steering, braking and acceleration

Work in conjunction with the tires and seat springs to give acceptable ride comfort.

Compromise The previous list is difficult to achieve completely, so some sort of compromise has to be reached. Because of this, many different methods have been tried, and many are still in use. Keep these requirements in mind, and it will help you understand why some systems are constructed in different ways.

Comfort...[2]

Speed...[2]

Sprung and Unsprung Mass Unsprung mass is usually the mass of the suspension component, the wheels, and the springs. However only 50% of the spring mass and the moving suspension arms are included. This is because they form part of the link between the sprung and unsprung masses. It is beneficial to have the unsprung mass as small as possible in comparison with the sprung mass (main vehicle mass). By doing so, when the vehicle hits a bump the movement of the suspension will have only a small effect on the main part of the vehicle. The overall result is improved ride comfort.

Further In Suspension A vehicle needs a suspension system to cushion and damp out road shocks. This provides comfort to the passengers and prevents damage to the load and vehicle components. A spring between the wheel and the vehicle body allows the wheel to follow the road surface. The tire plays an important role in absorbing small road shocks. It is often described as the primary form of suspension. The vehicle body is supported by springs located between the body and the wheel axles. Together with the shock absorber, these components are referred to as the suspension system.

S
uspension system[2]

Effect of Suspension As a wheel hits a bump in the road, it is moved upwards with quite some force. An unsprung wheel is affected only by gravity, which will try to return the wheel to the road surface. However, most of the energy will be transferred to the body. When a spring is used between the wheel and the vehicle body, most of the energy in the bouncing wheel is stored in the spring and not passed to the vehicle body. The vehicle body will only move upwards a very small distance compared to the movement of the wheel.

Springs These parts of the suspension system take up the movement or shock from the road. The energy of the movement is stored in the spring. The actual spring itself can be in many different forms, ranging from a steel coil to a pressurized chamber of nitrogen. Soft springs provide the best comfort, but stiff springs can be better for high performance. Therefore, vehicle springs and suspension are made to provide a compromise between good handling and comfort.

Leaf spring

Gas spring

Coil spring

Torsion bar spring

Shock Absorbers The energy stored in the spring after a bump, has to be gotten rid of or else the spring would oscillate (bounce up and down). The shock absorber damps down these oscillations by converting the energy from the spring into heat. If working correctly the spring should stop moving after just one bounce and rebound.

Telescopic damper/shock absorber[2]

Strut The combination of a coil spring with a shock absorber inside, between the wheel stub axle and the inner wing, is often referred to as a strut. This is a very popular type of suspension.

McPherson strut[2]

Wishbone A wishbone is a triangular shaped component with two corners hinged in a straight line on the vehicle body. The third corner is hinged to the moving part of the suspension.

Front suspension wishbone

Bump Stop When a vehicle hits a particularly large bump, or if it is carrying a heavy load, the suspension system may bottom out (reach the end of its travel). The bump stop, usually made of rubber, prevents metal-to-metal contact, which would cause damage.

Rubber stop

Link A link is a very general term, which is used to describe a bar or other similar component that holds or controls the position of another component. Other terms may be used such as tie-bar or tie-rod.

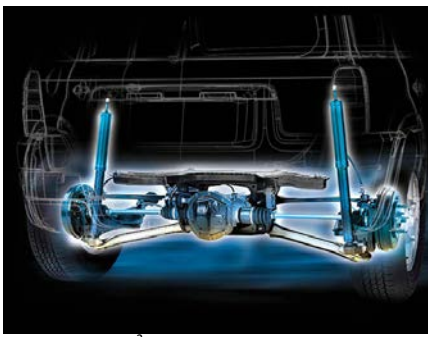

Suspension link[2]

Beam Axle This is a solid axle from one wheel to the other. Currently, it is not used on the majority of light vehicles. However, as it makes a very strong construction, it is still common on heavy vehicles.

Heavy vehicle axle[2]

Gas/Fluid Suspension The most common types of spring are made from steel. However, some vehicles use pressurized gas as the spring (think of a balloon or a football). On some vehicles, a connection between the wheels is made using fluid running through pipes from one suspension unit to another.

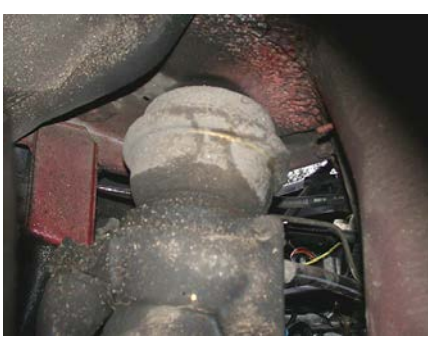

Gas suspension unit

Independent Suspension Independent front and rear suspension (IFS/IRS) was developed to meet the demand for improved ride quality and handling. The main advantages of independent suspension are as follows:

When one wheel is lifted or drops, it does not affect the opposite wheel

The unsprung mass is lower; therefore, the road wheel stays in better contact with the road

Problems with changing steering geometry are reduced

More space for the engine at the front

Softer springing with larger wheel movement is possible.

Anti-Roll Bar The main purpose of an anti-roll bar is to reduce body roll on corners. The anti-roll bar can be thought of as a torsion bar. The center is pivoted on the body and each end bends to make connection with the suspension/wheel assembly. When the suspension is compressed on both sides, the anti-roll bar has no effect because it pivots on its mountings. As the suspension is compressed on just one side, a twisting force is exerted on the anti-roll bar. Part of this load is transmitted to the opposite wheel, pulling it upwards. This reduces the amount of body roll on corners.

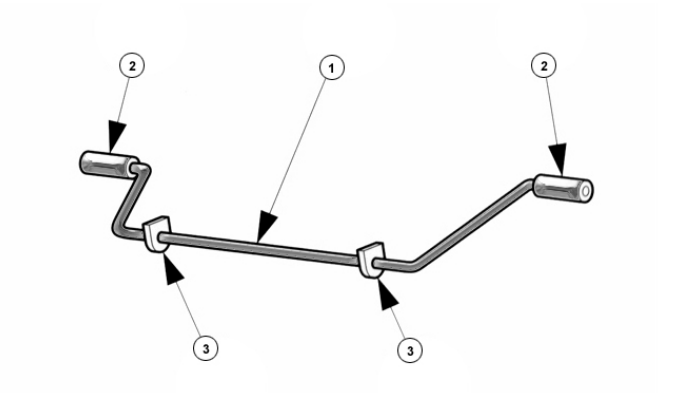

Shape of an anti-roll bar[1]

Panhard Rod The Panhard rod was named after a French engineer. Its purpose is to link a rear axle to the body. The rod is pivoted at each end to allow movement. It takes up lateral forces between the axle and body, thus removing load from the radius arms. The radius arms would then only need to transmit longitudinal forces.

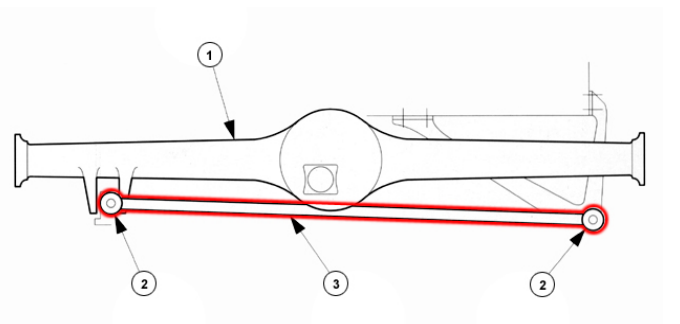

Rear axle with Panhard rod[1]

Summary A wide variety of suspension systems and components are used. Engineers strive to achieve optimum comfort and handling. However, these two main requirements are often at odds with each other. As is common with all vehicle systems, electronic control is one way developments are now being made.

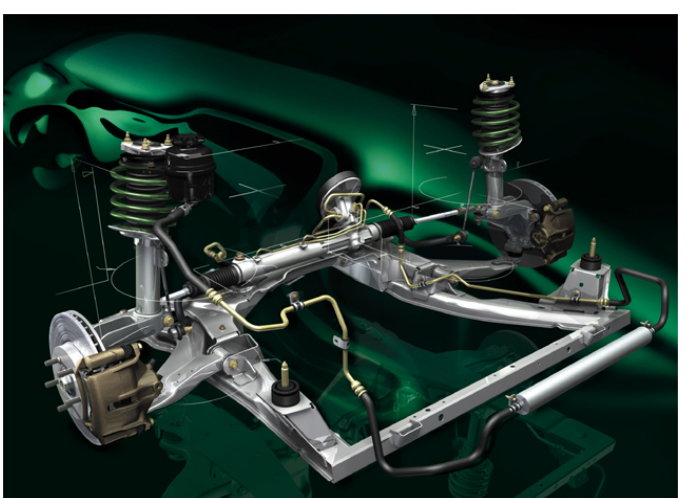
Suspension continues to develop[2]

State the main advantages of independent suspension.

Read the previous section again and note down some key bullet points here:

-
-
-
-
-

Springs

Introduction The requirements of the springs can be summarized as follows:

Absorb road shocks from uneven surfaces

Control ground clearance and ride height

Ensure good tire adhesion

Support the weight of the vehicle

Transmit gravity forces to the wheels.

There are a number of different types of spring used on modern vehicles.

Coil Springs Although modern vehicles use a number of different types of spring medium, the most popular is the coil (or helical) spring. Coil or helical springs, used in vehicle suspension systems, are made from round spring steel bars. The heated bar is wound on a special former and then heat-treated to obtain the correct elasticity (springiness). The spring can withstand any compression load but not side thrust. It is also difficult for a coil spring to resist braking or driving thrust. Suspension arms are used to resist these loads.

Coil spring in position

Independent Suspension Systems Coil springs are generally used with independent suspension systems; the springs are usually fitted on each side of the vehicle, between the stub axle assembly and the body. The spring remains in the correct position because recesses are made in both the stub axle assembly and body. The spring is always under compression due to the weight of the vehicle and thus holds itself in place.

Coil spring upper fitting

Coil spring lower fitting

Coil Spring Features The coil spring is a torsion bar wound into a spiral. It can be progressive if the diameter of the spring is tapered conically. A coil spring cannot transmit lateral or longitudinal forces, creating the need for links or arms. It produces little internal damping. No maintenance is required and high travel is possible.

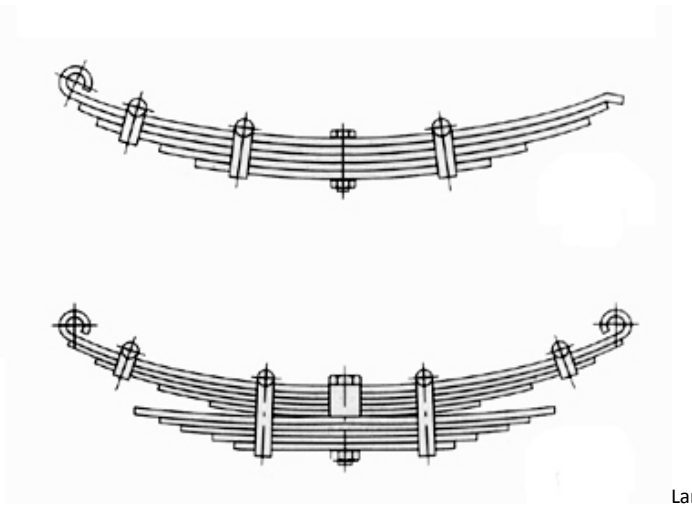

Laminated springs

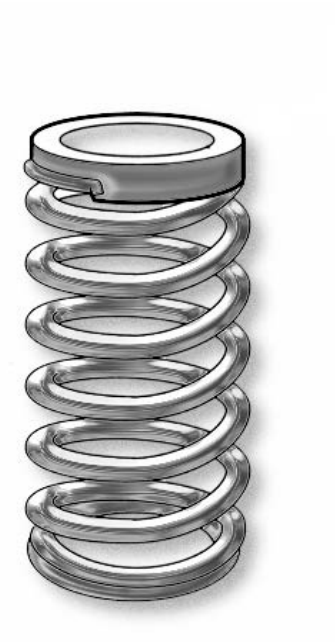

Details of a coil spring

Leaf Springs The leaf spring can provide all the control for the wheels during acceleration, braking, cornering, and general movement caused by the road surface. They are used with fixed axles. Leaf springs can be described as:

Laminated or multi-leaf springs

Single leaf or mono-leaf springs.

Multi-Leaf Spring The multi-leaf spring was widely used at the rear of cars and light vehicles, and is still used in commercial vehicle suspension systems. It consists of a number of steel strips or leaves placed on top of each other and then clamped together. The length, cross section, and number of leaves are determined by the loads carried.

Heavier vehicle leaf spring

Leaf Spring Fixings The top leaf is called the main leaf and each end of this leaf is rolled to form an eye. This is for attachment to the vehicle chassis or body. The leaves of the spring are clamped together by a bolt or pin known as the center bolt. The spring eye allows movement around a shackle and pin at the rear. This allows the spring to flex. The vehicle is pushed along by the rear axle through the front section of the spring, which is anchored firmly to the fixed shackle on the vehicle chassis or body. The curve of leaf springs straightens out when a load is applied to it, and its length changes.

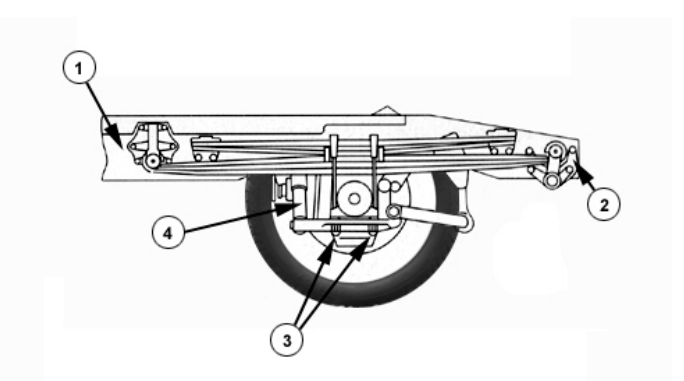

Details of a leaf spring[1]

Shackles Because of the change in length as the spring moves, the rear end of a leaf spring is fixed by a shackle bolt to a swinging shackle. As the road wheel passes over a bump, the spring is compressed and the leaves slide over each other. As it returns to its original shape, the spring forces the wheel back in contact with the road. The leaf spring is usually secured to the axle by means of U-bolts. As the leaves of the spring move, they rub together. This produces interleaf friction, which has a damping effect.

Change in length

Single Leaf Spring A single leaf spring, as the name implies, consists of one uniformly stressed leaf. The spring varies in thickness from a maximum at the center to a minimum at the spring eyes. This type of leaf spring is made to work in the same way as a multi-leaf spring. Advantages of this type of spring are:

Simplified construction

Constant performance over a period, because interleaf friction is eliminated

Reduction in unsprung mass.

Tapered single leaf[2]

Torsion Bars This type of suspension uses a metal bar, which provides the springing effect as it is twisted. Its advantage is that the components do not take up much room. The torsion bar can be a round or square section, solid or hollow. The surface must be finished accurately to eliminate pressure points, which may cause cracking and fatigue failure. They can be fitted longitudinally or laterally.

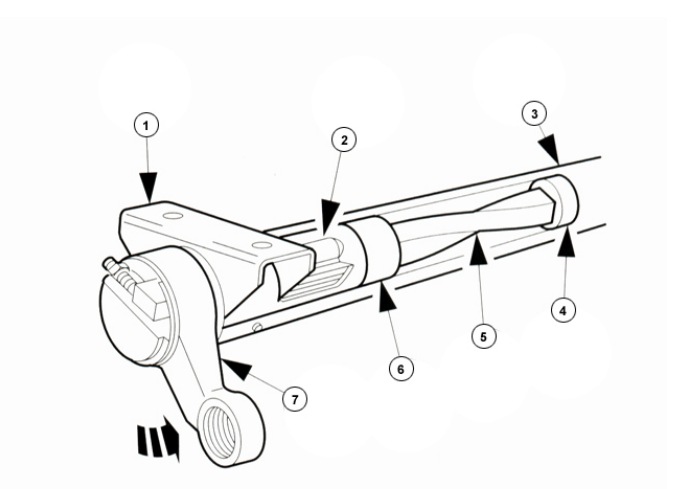

An anti-roll bar is a torsion spring[1]

Torsion Bar Features Torsion bars are maintenance free but can be adjusted. They transmit longitudinal and lateral forces and have low mass. However, they have limited self-damping. Their spring rate is a linear rate and life may be limited due to fatigue.

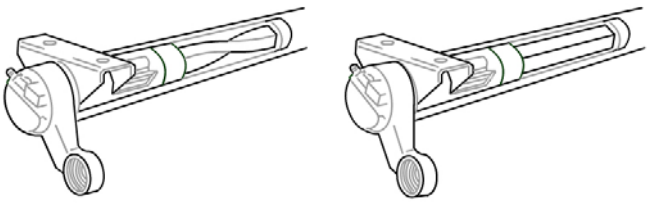

Torsion bar in a guide tube[1]

Pneumatic Suspension Steel springs must be stiff enough to carry a vehicle's maximum load. However, this can result in the springs being too stiff to provide consistent ride control and comfort when the vehicle is empty. Pneumatic suspension can be made self-compensating. It is fitted on many heavy weight vehicles and buses, but is also becoming popular on some light off-road vehicles.

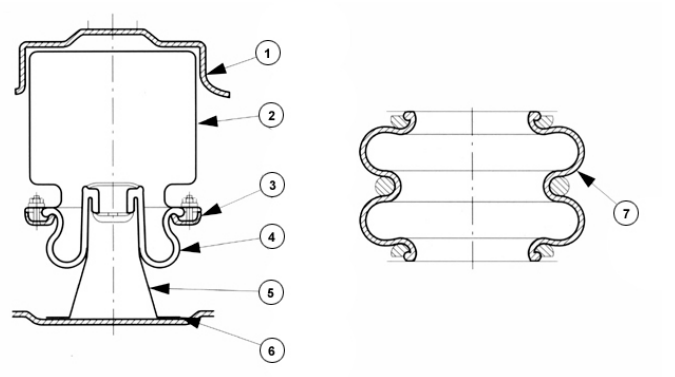

Air spring[1]

Air Spring System The pneumatic or air spring is a reinforced rubber bellow fitted between the axle and the chassis or vehicle body. An air compressor is used to increase or decrease the pressure depending on the load in the vehicle. This is done automatically but some manual control can be retained for adjusting the height of the vehicle or stiffness of the suspension. Air springs can be thought of as being like a balloon or football on which the car is supported. The system involves compressors and air tanks. The system is not normally used on light vehicles.

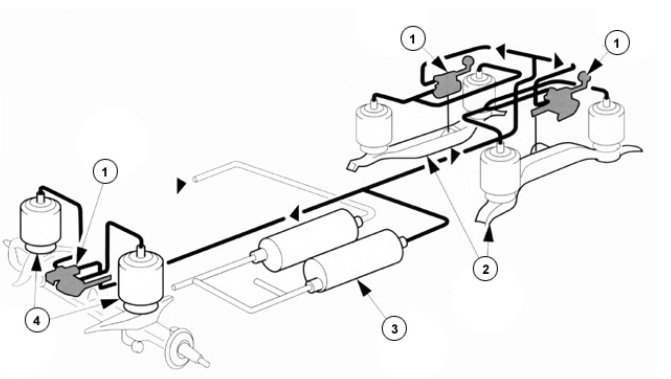

Air spring suspension system[1]

Rubber Springs This is now a very old system, but often, old ideas come back! The suspension medium, or spring, is simply a specially shaped piece of rubber. This technique was used on early 'Minis' for example. The rubber did not require damping in most cases. Nowadays rubber springs are only used as a supplement to other forms of springs. They are however popular on trailers and mobile homes.

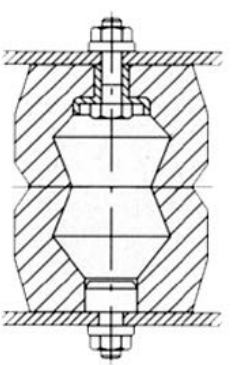

Hollow rubber spring[1]

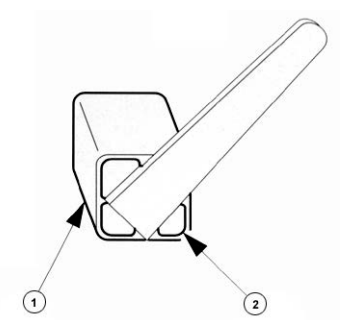

Torsion spring[1]

Hydrolastic Suspension The suspension unit is supported by a rubber spring. Under the spring, a chamber of fluid is connected by a pipe to the corresponding front or rear unit. This system was the forerunner to the hydrogas system.

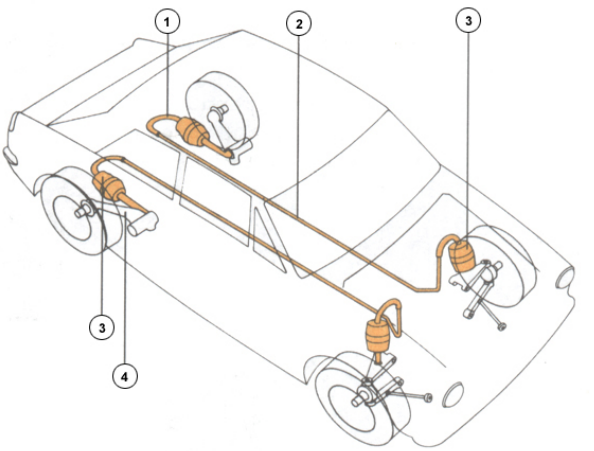

Suspension units are linked by fluid

Hydrogas Suspension In the hydrogas suspension system, each wheel has a sealed displacer unit. This contains nitrogen gas under very high pressure, which works in much the same way as the steel spring in a conventional system. A shock absorber is also incorporated within the displacer unit. The lower part of the displacer unit is filled with a suspension fluid (a type of wood alcohol usually). The units can be joined by pipes or used individually.

Hydrogas suspension unit

Hydrogas Connections Connecting suspension units, using fluid-filled pipes, helps to improve the ride quality. Linking front to rear makes the rear unit rise as the front unit is compressed by a bump. This tends to keep the vehicle level and reduce pitch. Ride height control can be achieved by pumping oil into or out of the working chamber.

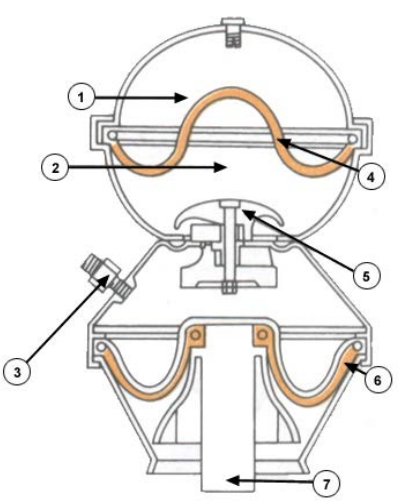

Suspension unit

Summary Suspension springs can be made from a variety of materials and in many different ways. The most common is the coil spring. This is because it has many advantages and is reasonably inexpensive.

State why the coil spring is a type of torsion bar.

Read the previous section again and note down some key bullet points here:

-
-
-
-
-

Shock Absorbers

Introduction As a spring is deflected, energy is stored in it. If the spring is free to move, the energy is released in the form of oscillations, for a short time, before it comes to rest. This principle can be demonstrated by flicking the end of a ruler placed on the edge of a desk. The function of the shock absorber is to absorb the stored energy, which reduces the rebound oscillation. A spring without a shock absorber would build up dangerous and uncomfortable bouncing of the vehicle.

Oscillations

Hydraulic Shock Absorbers Hydraulic shock absorbers are the most common type used on modern vehicles. They work on the principle of forcing fluid through small holes. In a hydraulic shock absorber, the energy in the spring is converted into heat. This occurs as the fluid (a type of oil) is forced rapidly through small holes (orifices). The oil temperature in a shock absorber can reach over 150°C during normal operation. As an example, think of using a hand oil pump and how hard it is to make the oil flow quickly.

Telescopic damper

Shock Absorber Functions The functions of a shock absorber can be summarized as follows:

Ensure directional stability

Ensure good contact between the tires and the road

Prevent build up of vertical movements

Reduce oscillations

Reduce wear on tires and chassis components.

Damper/Shock absorber

Friction Shock Absorber It's not used on cars today, but you will find this system used as part of mobile home or trailer stabilizers.

Principle of friction damping[1]

Lever Type Shock Absorber A lever-arm shock absorber, which was used on earlier vehicles, works on the same principle as the telescopic type. The lever operates a piston, which forces oil into a chamber.

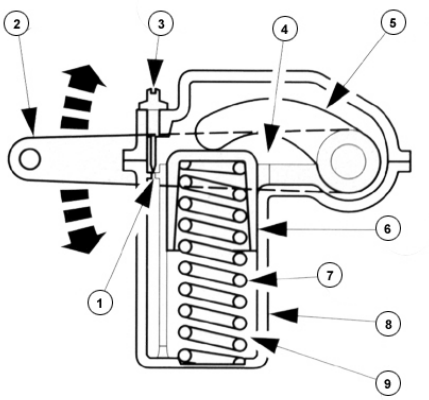

Lever-arm damper[1]

Twin Tube Telescopic Shock Absorber This is the most commonly used type of telescopic shock absorber; it consists of two tubes. An outer tube forms a reservoir space and contains the oil displaced from an inner tube. Oil is forced through a valve by the action of a piston as the shock absorber moves up or down. The reservoir space is essential to make up for the changes in volume as the piston rod moves in and out.

Single Tube Telescopic Shock Absorber This is often referred to as a gas shock absorber. However, the damping action is still achieved by forcing oil through a restriction. The gas space behind a separator piston is used to compensate for the changes in cylinder volume, which is caused as the piston rod moves. The gas is at a pressure of about 25 bar.

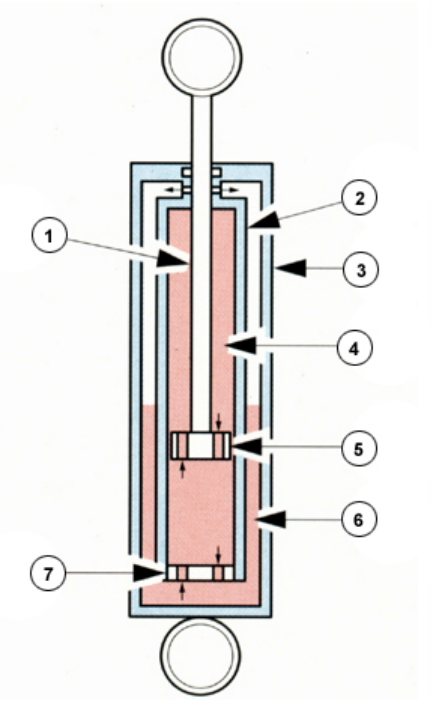

Twin tube system[1]

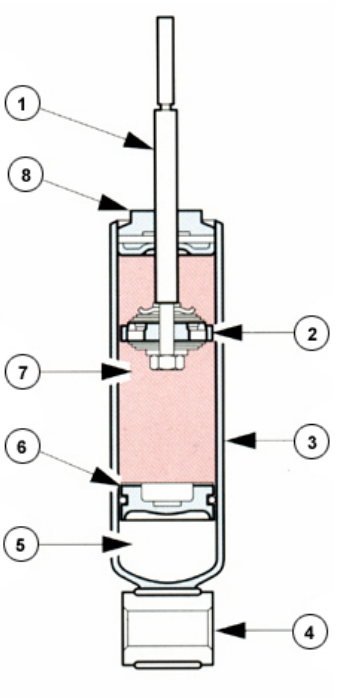

Single tube system[1]

Twin Tube Gas Shock Absorber The twin tube gas shock absorber is an improvement on the well-used twin-tube system. The gas pressure on the oil prevents foaming, which in turn ensures constant operation under all operating conditions. Gas pressure is set at about 5 bar. If bypass grooves are machined in the upper half of the working chamber, the damping rate can be made variable. With light loads, the shock absorber works with a soft damping effect. When the load is increased, the piston moves lower down the working chamber away from the grooves resulting in full damping effect.

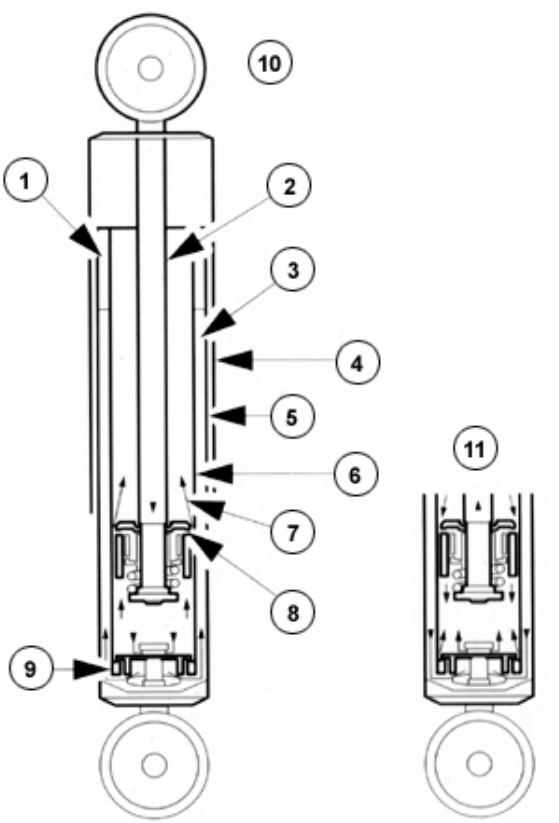

Twin tube gas system[1]

Electronically Controlled Shock Absorbers These are shock absorbers where the damping rate can be controlled by solenoid valves inside the units. With suitable electronic control, the characteristics can be changed within milliseconds to react to driving and/or load conditions. When it is activated, the solenoid allows some of the oil to be diverted.

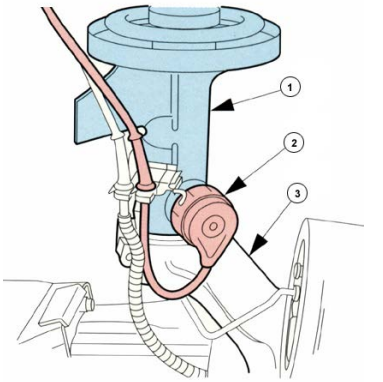

Shock absorber with electronic control[1]

Electronic System Shown here are the sensors and other components necessary for electronic shock absorber control. Electronic control allows a combination of high comfort and performance. Adjustments can be made automatically or pre-set by the driver.

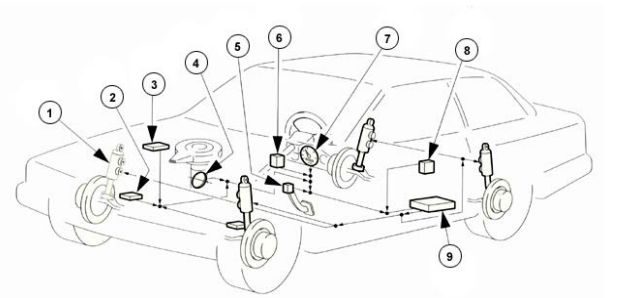

Electronic suspension system[1]

Summary Shock absorbers are used to prevent the suspension springs from oscillating. This improves handling, comfort and safety.

Suspension in action[2]

State the purpose and functional requirements of a shock/damper.

Read the previous section again and note down some key bullet points here:

-
-
-
-
-

Front Suspension Layouts

Introduction As with most design aspects of the vehicle, compromise often has to be reached between performance, body styling and cost. The following screens compare the main front axle suspension systems.

Front suspension affects performance[2]

Wishbone Suspension Twin, unequal length wishbone suspension, is widely used on light vehicles. A coil spring is fitted between two suspension arms. The suspension arms are 'wishbone' shaped and the bottom end of the spring fits in a plate in the lower wishbone assembly. The top end of the spring is located in a section of the body. The top and bottom wishbones are attached to the chassis by rubber bushes. A shock absorber is fitted inside the spring. The stub axle and swivel pins are connected to the outer ends of the upper and lower wishbones by ball or swivel joints.

Twin, unequal length wishbone system[2]

Strut Type Suspension This type of suspension system has been used now for many years. It is often referred to as the McPherson Strut system. With this system, the stub axle is combined with the bottom section of a telescopic tube, which incorporates a shock absorber. The bottom end of the strut is connected to the outer part of a transverse link by means of a ball joint. The inner part of the link is secured to the body by rubber bushes. The top of the strut is fixed to the vehicle body by a bearing, which allows the complete strut to swivel. A coil spring is located between the upper and lower sections of the strut.

Suspension strut in position[2]

Double Transverse Arms This type of suspension system results in independently suspended wheels, which are located by two arms perpendicular to the direction of travel. The arms support stub axles. This system allows a low bonnet line and there are only slight changes of track and camber with suspension movements. However, a large number of pivot points are required and production costs are high.

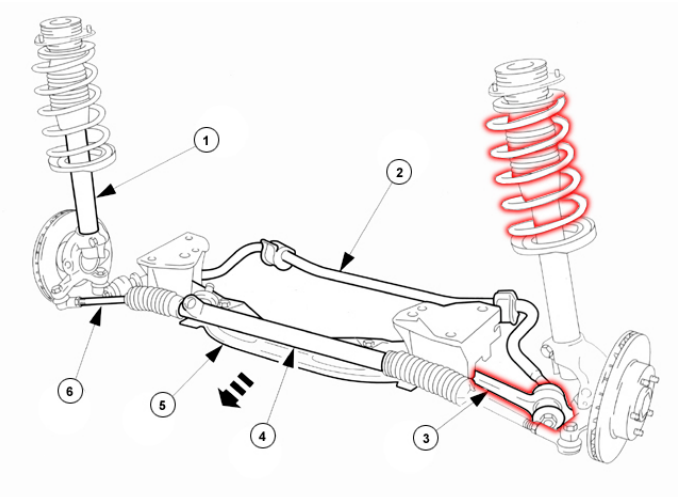

Transverse arms and coil spring[1]

Transverse Arms with Leaf Spring With this system, a transverse arm and a leaf spring locate the wheel. The spring can act as an anti-roll bar creating low cost. However, it has a harsh response when lightly loaded. There are major changes of camber as the vehicle is loaded. This system is not used on modern cars.

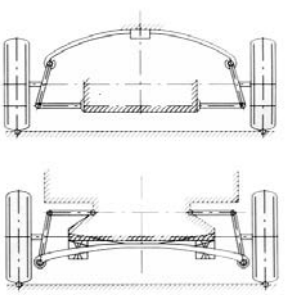

Leaf spring system[1]

Transverse Arm with McPherson Strut This system is a combination of the spring, shock absorber, wheel hub, steering arm and axle joints in one unit. It is the most popular method in current use. There are only slight changes in track and camber with suspension movement. Forces on the joints are reduced because of the long strut. However, the body must be strengthened around the upper mounting and a low bonnet line is difficult.

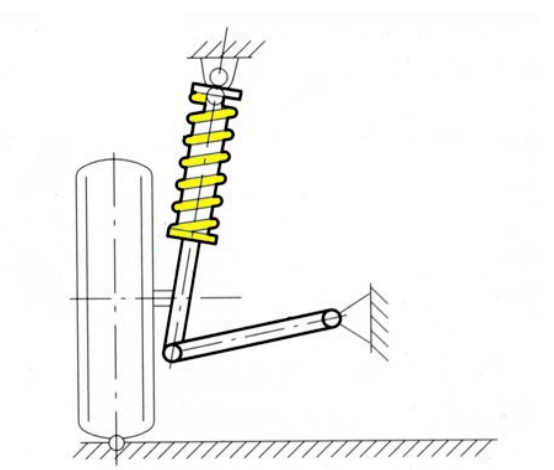

Strut system[1]

Double Trailing Arms In this system, two trailing arms support the stub axle. These can act on torsion bars often formed as a single assembly. There is no change in castor, camber or track with suspension movement. It can be assembled and adjusted off the vehicle. However, lots of space is required at the front of the vehicle and it is expensive to produce. Acceleration and braking cause up and down movements, which in turn change the wheelbase.

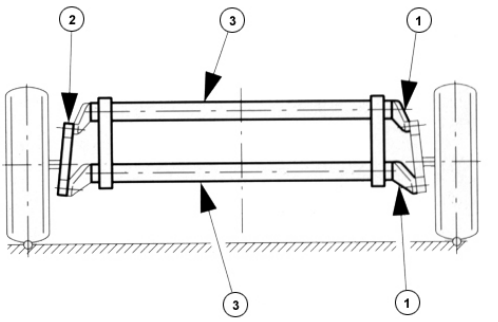

Trailing arm system[1]

Summary There are four main types of front suspension layouts. However, the two most popular are the McPherson strut and the unequal length wishbone systems.

Front suspension system[2]

State THREE advantages of strut type suspension.

Read the previous section again and note down some key bullet points here:

-
-
-
-
-

Rear Suspension Layouts

Introduction The systems used for the rear suspension of light vehicles vary depending on the requirements of the vehicle. In addition, the systems are different if the vehicle is front or rear wheel drive. Older and heavy vehicles use leaf type springs. The two main types using independent rear suspension are the:

Strut type for front wheel drive

Trailing and semi-trailing arm with coil springs for rear wheel drive.

Rear struts[2]

Rear semi-trailing arm

Strut System The strut type is very similar to the one used at the front of the vehicle. Note that suitable links are used to allow up and down movement, but prevent the wheel moving in any other direction. Some change in the wheel geometry is designed in, to improve handling on corners.

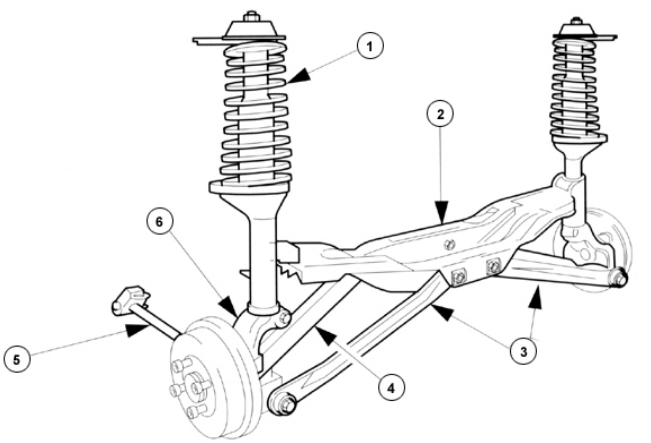

Rear suspension struts[1]

Trailing Arms and Semi-Trailing Arms Trailing arm suspension and semi-trailing arm suspension both use wishbone shaped arms hinged on the body. Trailing arms are at right angles to the vehicle centerline and semi-trailing arms are at an angle. This changes the geometry of the wheels as the suspension moves. The final drive and differential unit is fixed with rubber mountings to the vehicle body. Drive shafts must therefore be used to allow drive to be passed from the fixed final drive to the moveable wheels. The coil springs and shock absorbers are mounted between the trailing arms and the vehicle body.

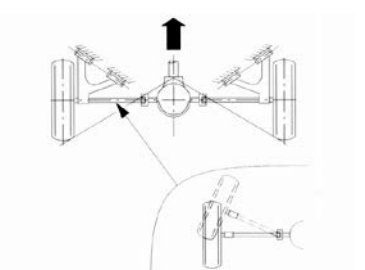

Semi-trailing arms[1]

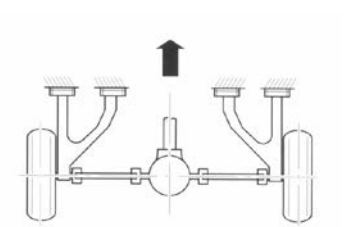

Trailing arms[1]

Rigid Axle with Leaf Springs The final drive, differential and axle shafts are all one unit. With this system, the rear track remains constant reducing tire wear. It has good directional stability because no camber change causes body roll on corners. This is a strong design for load carrying. However, it has a high unsprung mass. The interaction of the wheels causes lateral movement reducing tire adhesion when the suspension is compressed on one side.

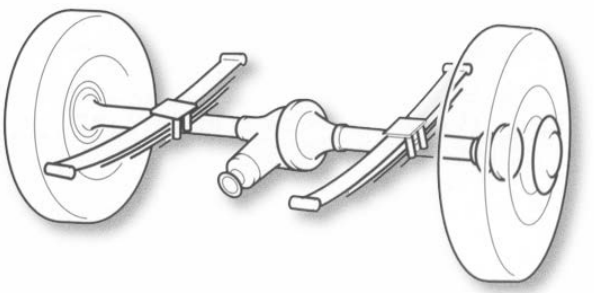

This method is used on older and heavy vehicles[1]

Rigid Axle with A-Bracket This system has a solid axle with coil springs and a central joint supports the axle on the body. It tends to make the rear of the vehicle pull down on braking, which stabilizes the vehicle. It results in a high unsprung mass.

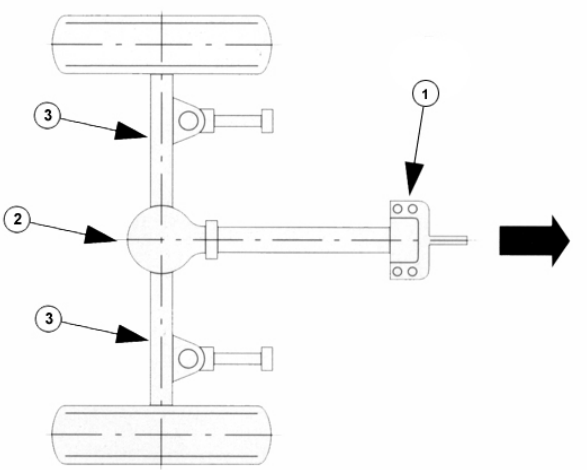

'A' bracket system[1]

Rigid Axle with Compression/Tension Struts Coil springs provide the springing, and the axle on this system is located by struts. Suspension extension is reduced when braking or accelerating, and the springs are isolated from these forces. However, there are high loads on the welded joints, and it has a high overall weight and a large unsprung mass.

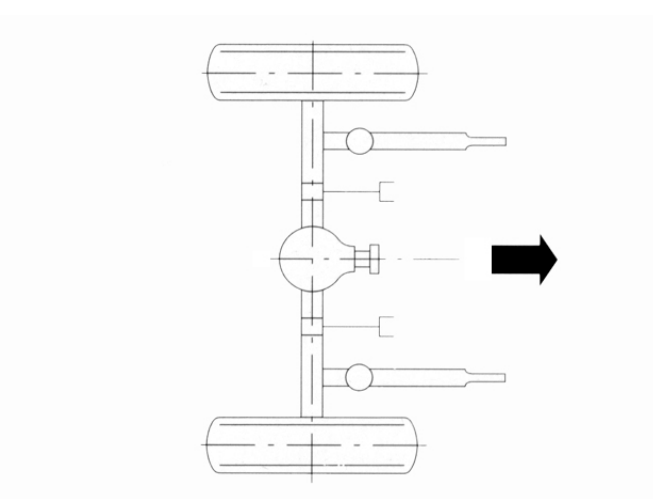

Welded compression/tension struts[1]

Torsion Beam Trailing Arm Axle Two links are used, connected by a 'U' section that has low torsional stiffness but a high resistance to bending. Track and camber does not change as the suspension moves. It has a low unsprung mass and is simple to produce. It is a space saving design, but torsion bar springing on this system can be more expensive than coil springs.

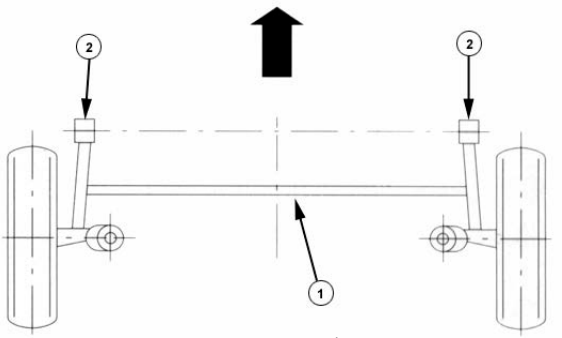

Torsion beams twist to provide the spring action[1]

Torsion Beam Axle with Panhard Rod Two links are welded to an axle tube or 'U' section. The lateral forces are taken by a Panhard rod. Track and camber does not change as the suspension moves and simple flexible joints connect it to the bodywork. Torsion bar springing on this system can be more expensive than coil springs.

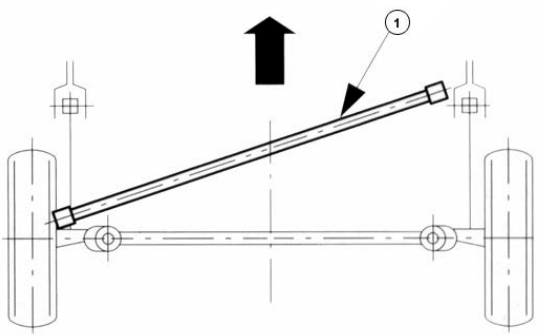

Panhard rod and torsion beam system[1]

Trailing Arms Trailing arms are always mounted with the pivots at ninety degrees to the direction of travel. When braking, the rear of the vehicle pulls down giving stable handling. Track and camber does not change and the design is space saving. There is a slight change of wheelbase when the suspension is compressed. Variable length driveshafts with two UJs are used.

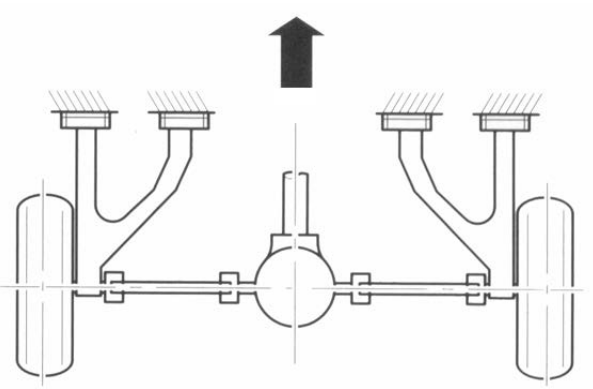
Arms at ninety degrees to direction of travel[1]

Semi-Trailing Arms - Fixed Length Drive Shafts The semi-trailing arms are pivoted at an angle to the direction of travel. Only one UJ is required. This is because the radius of the suspension arm is the same as the driveshaft, when the suspension is compressed. There is only a very small dive when braking. This system has a lower cost than when variable length driveshafts are used. There are, however, sharp changes in track when the suspension is compressed. This results in tire wear, and there is a slight tendency to oversteer.

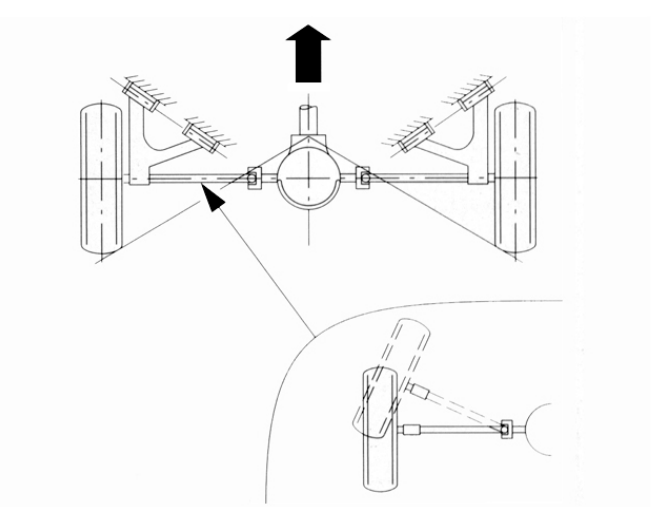
Arms at an angle to the direction of travel[1]

Semi-Trailing Arms - Variable Length Drive Shafts With this method, the final drive assembly is mounted to the body and two UJs are used on each shaft. The two arms are independent of each other and only small track changes occur. However, there are large camber changes. The system has a relatively high cost because of the drive shafts and joints.

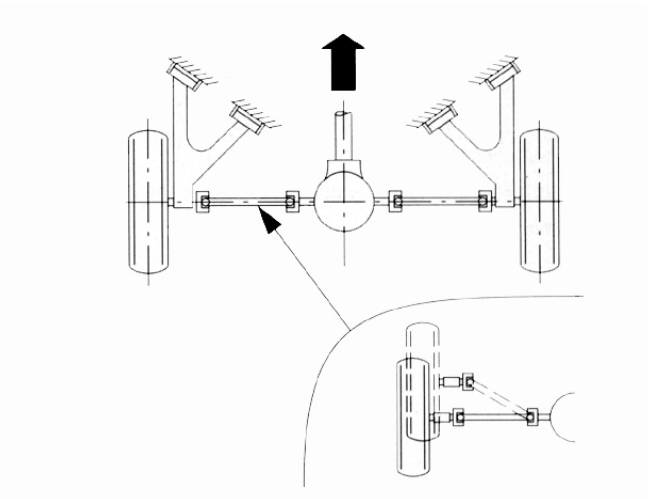

Track remains fairly constant but camber changes are large[1]

Summary There are a number of rear suspension systems. Each has advantages and disadvantages. Engineers strive to achieve the optimum design. The system shown here is known as 'quadralink'. It is very similar to front strut systems.

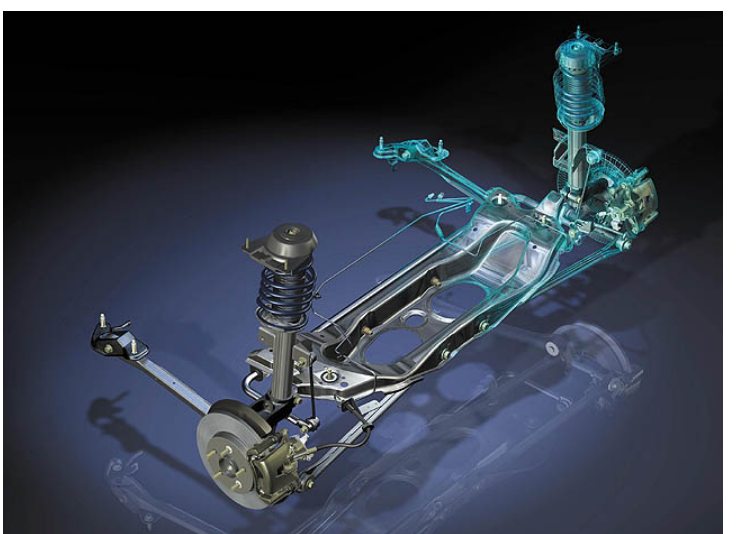

Ford 'quadralink' suspension[2]

State the difference between trailing and semi-trailing arm suspension.

List FIVE types of rear suspension system.

Read the previous section again and note down some key bullet points here:

-
-
-
-
-

Electronically Controlled Suspension

Introduction Electronic control of suspension or active suspension, like many other innovations, was born in the Grand prix world. It is now slowly becoming more popular on production vehicles.

F1 car in action[2]

Active Suspension Conventional suspension systems are always a compromise between soft springs for comfort and harder springs for better cornering ability. Active systems have the ability to switch between the two extremes.

Block diagram of active suspension

Electronic Control One way of achieving the ideal springing is by replacing the conventional springs with double acting hydraulic units. These are controlled by an ECU, which receives signals from various sensors. Oil at a pressure in excess of 150 bar (that's 150 times atmospheric pressure), is supplied to the hydraulic units from a pump.

No active control…

With double acting hydraulic control…

Benefits of Active Suspension The main benefits of active suspension are as follows:

Improvements in ride comfort, handling and safety

Predictable control of the vehicle under different conditions

No change in handling between laden and unladen.

Delphi MagneRide Delphi have developed an active shock absorber as part of their 'Unified Chassis Control' system. This system uses a type of magnetic fluid that changes the damping characteristics almost instantly, as solenoids are activated.

Variable damping technology [Delphi]

Revolution in Shock absorber Technology The presentation of the new BMW 7 Series is helping to create a breakthrough for electronically controlled vehicle damping. Four gas-pressure twin-tube shock absorbers form the core of the system in the BMW 7 Series. Their interior valves are continuously adjustable. A control valve is integrated in each of the shock absorbers' pistons. The electrical wiring runs through the hollow piston rod. Three sensors located in the front and rear-axle areas detect vertical acceleration and pass this information on to a micro-processor, which has infinitely variable control over the damping characteristics.

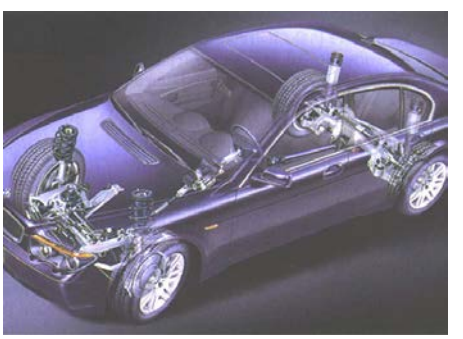

Sachs damper system (BMW)

Summary The benefits are considerable and as component prices fall, the system will become available on more vehicles. It is expected that even off road vehicles may be fitted with active suspension in the near future.

Suspension is a key system[2]

State THREE benefits of active suspension.

Read the previous section again and note down some key bullet points here:

-
-
-
-
-

Active Suspension

Active suspension operation

Introduction A traditional or a conventional suspension system, consisting of springs and dampers, is passive. In other words, once it has been installed in the car, its characteristics do not change.

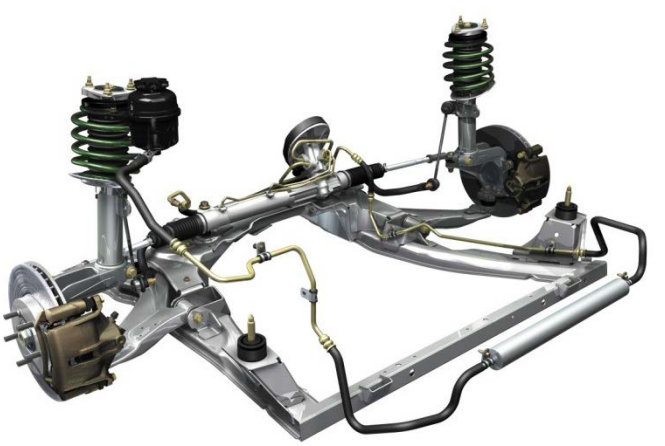

Jaguar suspension system (Source: Jaguar Media)

Advantages and disadvantages The main advantage of a conventional suspension system is its predictability. Over time the driver will become familiar with a car's suspension and understand its capabilities and limitations. The disadvantage is that the system has no way of compensating for situations beyond its original design.

Suspension system (Source: Ford Media)

Active suspension An active suspension system (also known as computerized ride control) has the ability to adjust itself continuously. It monitors and adjusts its characteristics to suit the current road conditions. As with all electronic control systems, sensors supply information to an ECU which in turn outputs to actuators. By changing its characteristics in response to changing road conditions, active suspension offers improved handling, comfort, responsiveness and safety.

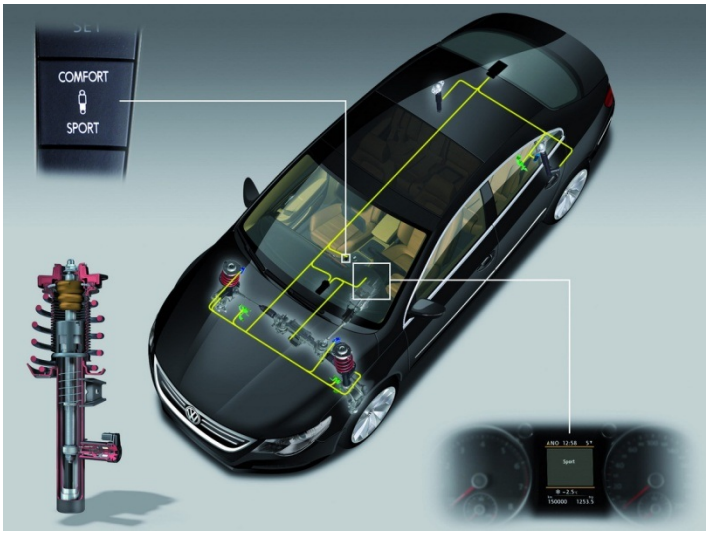

Active suspension also allows adjustments, in this case, between sport and comfort settings (Source: Volkswagen Media)

Components Active suspension systems consist of the following components:

Electronic control unit (ECU)

Adjustable dampers and springs

Sensors at each wheel and throughout the car

Levelling compressor (some systems)

Components vary between manufacturers, but the principles are the same.

✍ System block diagram

Operation Active suspension works by constantly sensing changes in the road surface and feeding that information, to the ECU, which in turn controls the suspension springs and dampers.

These components then act upon the system to modify the overall suspension characteristics by adjusting damper stiffness, ride height (in some cases) and spring rate.

Audi system components (Source: www.robson.m3Rlin.org/cars)

Example situation Assume that a car with conventional suspension is cruising down the road and then, after turning left, hits a series of potholes on the right hand side, each one larger than the next.

This would present a serious challenge to a conventional suspension system because the increasing size of the holes could set up an oscillation loop and bottom out the system.

An active system would react very differently.

Potholes…

…and more!

Active system reaction Sensors send information to the ECU about yaw and lateral acceleration. Others sensors measure excessive vertical travel, particularly in the right-front region of the car, and a steering angle sensor provides information on steering position.

The ECU analyses this information in about 10 milliseconds. It then sends a signal to the right-front spring to stiffen up. A similar signal is sent to the right-rear spring, but this will not be stiffened as much. The rigidity of the suspension dampers on the right hand side of the vehicle is therefore increased. Because of these actions, the vehicle will drive through the corner, with little impact on driveability and comfort.

✍ Inputs and outputs block diagram

Sensors One of the latest types of sensor is produced by Bosch.

The sensor simultaneously monitors three of a vehicle's movement axes – two acceleration or inclination axes (ax, ay), and one axis of rotation (Ωz). Previously, at least two separate sensors were required for this.

The integration of the sensors for lateral-acceleration and yaw rate reduces space requirements in the vehicle and the assembly work for the complete system.

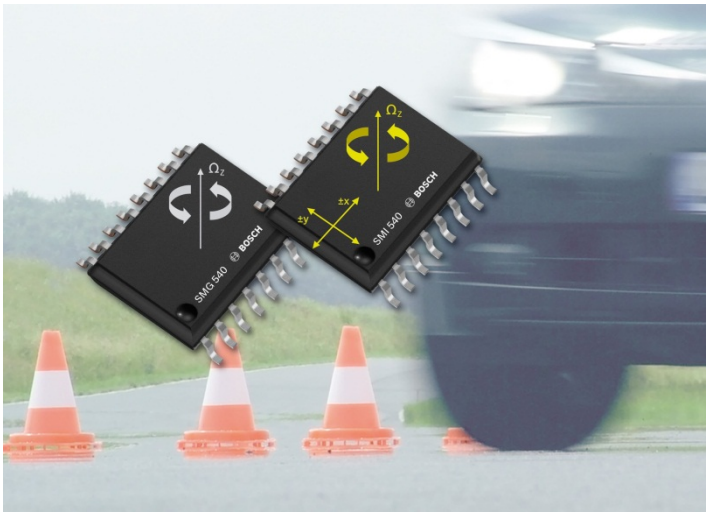

Integrated sensor (Source: Photo Bosch)

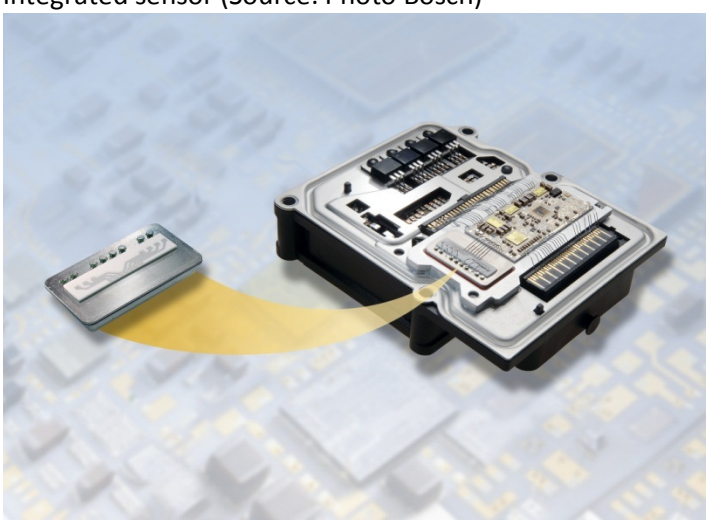
Sensor in the ECA (Source: Photo Bosch)

Actuators There are a number of ways of controlling the suspension. However, in most cases it is done by controlling the oil restriction in the damper. On some systems ride height is controlled by opening a valve and supplying pressurised fluid from an engine driven compressor.

Later systems are starting to use special fluid in the dampers that reacts to a magnetic field, which is applied from a simple electromagnetic coil. The case study of a Delphi system in the next section looks at this method in detail.

Suspension strut and actuator connection (Source: Delphi Media)

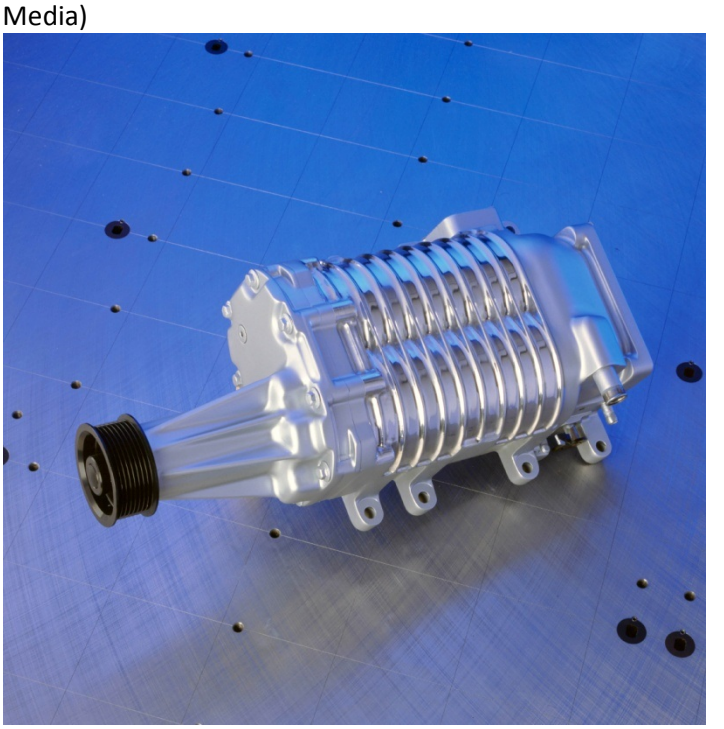

Suspension engine driven pump (Source: Ford Media)

Summary The improvements in ride comfort are considerable, which is why active suspension technology is becoming more popular.

In simple terms, sensors provide the input to a control system that in turn actuates the suspension dampers in a way that improves stability and comfort.

Active suspension will be fitted to a wide range of vehicles in many different countries.

Describe the operation of an active suspension system

Look back over the previous section and write out a list of the key bullet points here:

Delphi MagneRide Case Study

Description MagneRide was the industry's first semi-active suspension technology that employs no electro-mechanical valves and small moving parts. The MagneRide Magneto-Rheological (MR) fluid-based system consists of MR fluid-based single tube struts, shock absorbers (dampers), a sensor set and an on-board controller.

MagneRide suspension components (Source: Delphi Media)

System operation Magneto-Rheological (MR) fluid is a suspension of magnetically soft particles such as iron microspheres in a synthetic hydrocarbon base fluid. When MR fluid is in the 'off' state, it is not magnetized, and the particles exhibit a random pattern. But in the 'on' or magnetized state the applied magnetic field aligns the metal particles into fibrous structures, changing the fluid rheology to a near plastic state.

Rheology is the study of friction between liquids.

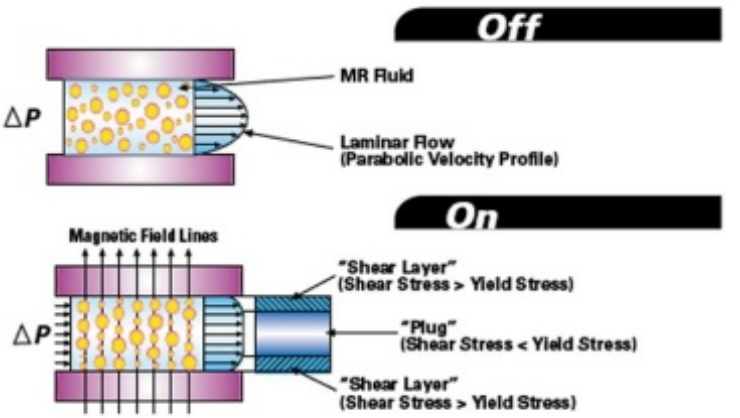

Fluid in the on and off states (Source: Delphi Media)

Performance advantages By controlling the current to an electromagnetic coil inside the piston of the damper, the MR fluid's shear strength is changed, varying the resistance to fluid flow. Fine tuning of the magnetic current allows for any state between the low forces of 'off' to the high forces of 'on' to be achieved in the damper. The result is continuously variable real time damping.

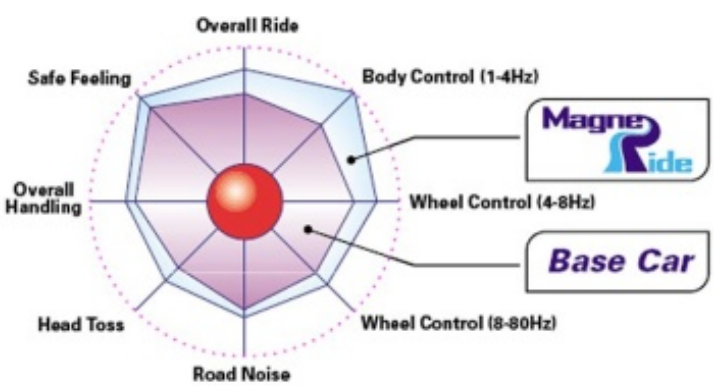

Representation of improvements when suspension is controlled (Source: Delphi Media)

Control system The layout here shows the inputs and outputs of the MagneRide system. Note the connections with the ESP system and how the information is shared over the controller area network (CAN).

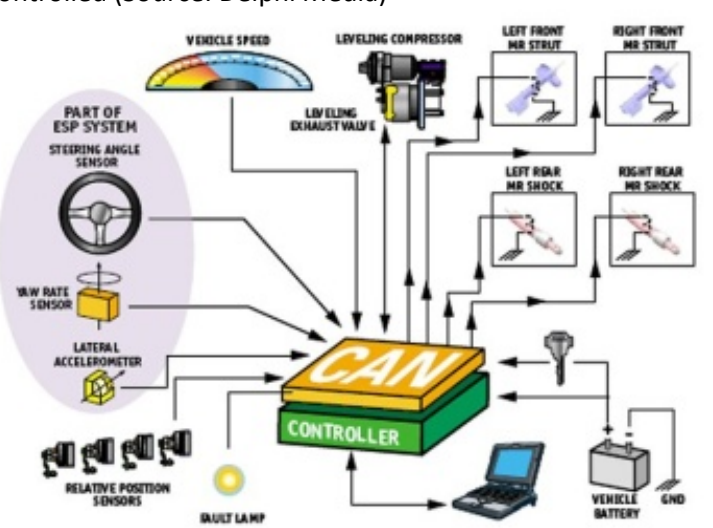

Control system (Source: Delphi Media)

Summary The MagneRide system produced by Delphi, uses a special fluid in the dampers. The properties of this fluid are changed by a magnetic field. This allows for very close control of the damping characteristics and a significant improvement in ride comfort and quality.

System layout on an Audi (Source Audi Media)

Describe the operation of the MagneRide suspension system

Look back over the previous section and write out a list of the key bullet points here:

Service and repair

Routine Maintenance

Scheduled Servicing Scheduled service requirements for wheels and tires are quite simple. The wheels should be checked for damage. The tires should have their pressures set accurately. They should also be checked for tread condition and damage.

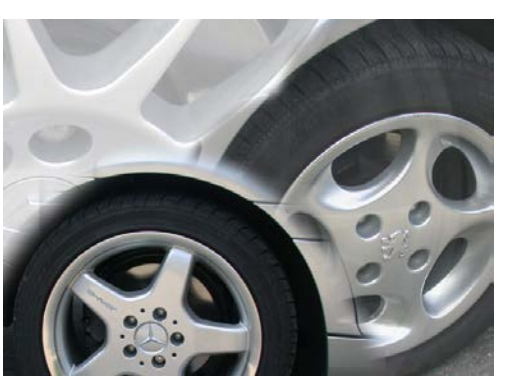

Wheels and tires

Tire Inflation Pressures The pressure at which the tires perform best is determined by a number of factors:

Load to be carried

Operating speed

Number of plies

Operating conditions

Section of the tire.

Recommended Settings Tire pressures must always be set at the manufacturer's recommended values. Pressure will vary according to the temperature of the tire - this is affected by operating conditions. Tire pressures should always be adjusted when the tire is cold, and should be checked at regular intervals.

Tire pressure wall chart

Tread Depth Checks Check that the tread depth, at all points round the tire, meets current regulations. Many tires have 'wear indicators' cast into the tread pattern.

Tread wear indicator

Data Sources Many good service manuals are available that list recommended pressures. Wall charts are also used by shops. The figures are also listed in the door jamb and owner's manual.

20. **Worksheet** Check wheels and tires for signs of damage, and set tire pressures.

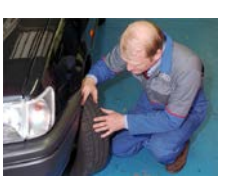
Check wheels and tires for damage

This task should be carried out at all service intervals. Some faults require immediate attention and some should be reported to the customer. For example, a bald tire needs replacing, but a tire that is becoming worn should be reported.

Damaged Wheels Some wheel faults can cause slow deflation of the tire. Alloy wheels with signs of cracking should be replaced immediately. A damaged steel wheel may affect handling.

Damaged wheel

A flat tire!

Tire Damage Tires are clearly an important safety issue. Check carefully all around the tire, inside and out. Look for tread wear and damage to the sidewalls. Feel the pattern of the tire from left to right, and right to left, to check for signs of feathering. This is usually caused by an incorrect toe setting.

Damaged tire

Valves Check valves for signs of leakage and make sure the dust cap is installed. The cap prevents dust from entering the valve, and is also a secondary air seal.

Tubeless tire valve

Summary Safety of all drivers and pedestrians is essential. The condition of a vehicle's wheels and in particular the tires is therefore vital. Carry out a check at all service intervals.

Wheels and tires

21. **Worksheet** Service manual-steering system.

Gaiters

Ball joints

Rack

C olumn

Servicing steering systems is a simple task. However, before starting work carry out the basic checks. These are described in the "Check Steering Components" worksheet. It is important to check for damage, security, wear and leaks. Repair any faults found after reporting them to the customer.

Manual Steering System Check and top off the steering gearbox oil if appropriate. Check the operation of column adjustment if fitted. Lubricate grease points on swivel joints/kingpins using a grease gun. Lubricate ball joints/track rod ends if appropriate. However, most are sealed for life. A good way to ensure correct operation of the steering is to road test the vehicle.

Greasing swivel joints is only necessary on older cars

22. **Worksheet** Service power-assisted steering (PAS) system.

Gaiters

Ball joints

Rack

Column

Servicing power-assisted steering systems is a simple task. However, before starting work, carry out the basic checks. These are described in the "Check Steering Components" worksheet. It is important to check for damage, security, wear and leaks. Repair any faults found after reporting them to the customer.

Hydraulic Power Assisted Steering Check condition and adjustment of the PAS hydraulic pump drive belt. Renew the belt if necessary and/or adjust. Top off reservoir fluid after checking data for the correct type. Run the engine and turn the steering lock to lock. Check for correct operation and look for signs of leaks. This should not be carried out excessively because it scuffs the tires. However, it is also a good way to check pump operation. Check the operation of progressive systems during a road test.

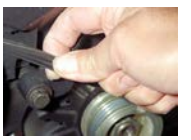
Drive belt test

Fluid tank level

Checking for leaks

Road testing[2]

Electric Power Assisted Steering If an electric system is used, check for cable connection security and fault code readouts if appropriate. All other checks, such as lubrication and security, are carried out in the same way as for hydraulic systems.

Electric PAS fault code check

Summary Regular servicing of any system ensures that it will continue to operate the way in which it was intended. Steering systems, power assisted or otherwise, are no exception. Clearly, the safety aspect is of prime importance with steering. A failure at high speed would be very dangerous.

23. **Worksheet** Service suspension system.

Front suspension[2]

Rear suspension[2]

The service requirements for suspension are very simple. Mainly, these involve quick checks for security and leaks. Some systems may still have lubrication points however, so check with the manufacturer's data. The components that could require replacement during a service are the shock absorbers. Replacing the shock absorbers is a straightforward operation on some vehicles. Instructions for these systems follow. However, where the shock absorber forms part of the suspension strut, the task is more complex. Refer to the appropriate worksheet for further instructions.

Damper/shock absorber[2]

Suspension system[2]

Front Shock Absorber Support the vehicle on a wheel-free hoist allowing the wheels to hang on the suspension. Use a jack or stands to support and adjust the height of the suspension arms as necessary. To remove the front shock absorber it may be necessary to remove a wheel panel for better access. Remove the upper retaining nut. Remove the bolt, or bolts, retaining the lower shock absorber pivot to the suspension arm. If necessary, compress the shock absorber by hand and remove it from the vehicle.

This shock absorber is part of the strut

Remove the lower fixing

Installation Prior to installation, place any grommets and washers in position on the upper stem. Insert the stem through the upper mount, push the grommet and washer into place and install the retaining nut. Tighten the nut to the specified torque. Place the lower end of the shock absorber in position and install the bolts. Tighten to the specified torque.

Front strut and shock absorber

Rear Shock Absorber Support the vehicle on a wheel-free hoist allowing the wheels to hang on the suspension. Use a jack or stands to support and adjust the height of the suspension arms as necessary. To remove the lower fixing, use two wrenches, if necessary, to undo the stud. Remove the shock absorber stud and nut. Remove the upper through bolt and nut and detach the shock absorber. It may be necessary to compress the shock absorber, but most are easy to remove.

Undo the top fixing

Remove the lower fixing

Installation To install, place the shock absorber in position and fit the retaining nuts and bolts. Tighten the lower fixing to the specified torque. Raise the suspension arm to a normal ride height with a jack. Tighten the upper shock absorber through bolt and nut to the specified torque.

Rear strut and shock absorber

Summary Safety for all road users and pedestrians is essential. Reliable operation of the vehicle is also important. The condition of all systems is therefore vital. Carry out checks at all service intervals.

Read the previous section again and note down some key bullet points here:

-
-
-

Introduction Wheels are removed and replaced for many jobs on the vehicle. The main removal task, for wheels and tires in particular, is to change the tire and valve stem.

24. **Worksheet** Changing a wheel and tire.

Jack up the car and support it securely on jack stands. Stands should always be used. Do not rely on the jack. If a hydraulic seal bursts, the car will fall and serious injury could result.

Changing a Wheel Removing and reinstalling a wheel is a simple job, but it must be done correctly. Jack up and support the car. Remove each nut or bolt in turn with an air gun. When reinstalling, ensure the lug nuts have the cone shape towards the wheel. Tighten evenly with an air gun and check with a torque wrench.

Tire Changing You must be trained on the specific tire changer before attempting this task. It is quite easy to damage either the rim or the new tire. Always double check that the tire is the correct size and rating for the vehicle. Check also that it matches the other tires on the vehicle.

New wheel and tire!

Old tire!

Breaking the Bead The beads of a tire make a very tight seal on the wheel rim. Most tire changers incorporate a 'bead breaker'. This is a hydraulic or air ram with a blade to push the beads into the wheel drop center. This is a very powerful action – take extra care.

Removing the Tire Check which side of the wheel the tire should be removed. Place the wheel onto the machine. Lever one of the beads over the 'foot' of the changer arm. Make sure the opposite side of this bead sits in the drop center. The tire is removed as the wheel rotates. Repeat the same procedure with the second bead.

Valve Removal and Installation It is usual, for safety reasons, to install a new valve stem when installing a new tire. The old valve stem can be cut off and thrown away. Using the correct puller, the new valve stem is pulled into place. Check that it fits evenly and securely.

Installing the Tire A lubricant, which is a kind of soap, is applied to the tire beads to aid installation. This is very important to prevent damage and ensure a good seal. The new tire is installed one bead at a time, using the foot of the changer to guide it into place.

Inflating a New Tire Remove the tire from the machine before inflating it. It is often necessary to inflate the tire above its normal pressure to make the beads seat correctly. A distinctive 'pop' or 'bang' is heard as the beads move into place on the wheel. Once seated, set the pressure to the manufacturer's recommendation. It is usual to balance the wheel before reinstalling on the vehicle.

List in sequence the process of changing a tire

Knock on Wheels Some early sports cars had 'knock on' wheels. These were held in place by one large 'butterfly nut' and were literally knocked with a hammer to secure them! Modern racing car wheels are changed in a similar way, but air guns and nuts are used.

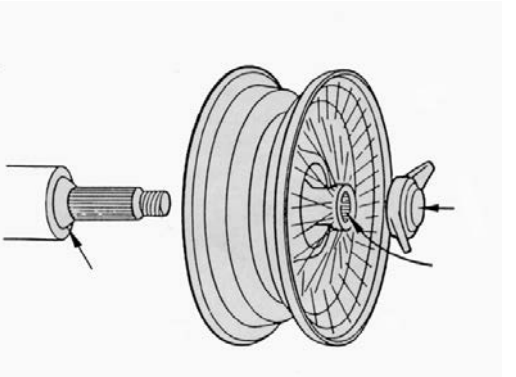

Knock on wheels

Inner Tubes Modern vehicles do not use tires with inner tubes. This is because the tubeless tire is simpler and has one major advantage. When a tubed tire is punctured it tends to deflate suddenly, which is a major safety issue at high speed. The tubeless tire deflates slowly when punctured. In some cases, a nail through a tubeless tire may not be noticed for a number of days, or even weeks. Tires should be checked for this as part of a service.

Tubes are rarely used on modern cars

25. **Additional Worksheet** Repair tire

26. **Worksheet** Remove, overhaul and refit steering rack.

Disconnect the battery, apply the parking brake and slacken the front road-wheel nuts if not using an air gun. Raise the front of the vehicle, support it on stands and remove the front wheels.

Remove Disconnect the ball joints from the steering levers. Pull back the carpet (if necessary) and disconnect the intermediate shaft universal joint from the pinion shaft. Remove the steering rack mounting bolts, clamp plate and plastic seating. Maneuver the rack and pinion clear of the body. Withdraw the steering rack from the passenger or driver's side of the engine compartment as appropriate. Remove the rack and pinion cover seal.

Remove ball joint nut

Attach splitter

Tighten the clamp

Free the joint

Overhaul Remove both ball joints from the tie-rods and remove the seals and clips from the ends of the rack housing. Hold the rack in a soft-jawed vice and unscrew the ball housing from the rack. Inspect all components. Tighten the ball housing onto the rack to the correct torque and secure by staking the edge of the ball housing into the groove in the rack. Replenish any lubricant lost and fit the rack seals and retaining clips. Screw the ball joint locknuts onto the tie-rods and screw each ball joint on an equal amount.

Remove outer joint

Remove gaiter

Unscrew inner ball joint

Check carefully

Refit Fit the steering rack through the appropriate side of the engine compartment. Position the pinion shaft in the body aperture and loosely fit the bolts. Fit any plastic seating components and fully tighten the clamp bolts. Finally, tighten the bolts on the pinion side of the rack to the correct torque. Fit the pinion cover plate, position the steering wheel in the straight-ahead position and connect the universal joint to the pinion shaft. Secure the sound-deadening material around the pinion shaft and replace the carpet. Connect the steering ball pins to the steering levers.

Steering rack in position

Alignment Fit the road wheels, lower the vehicle to the ground, and tighten the wheel nuts to the correct torque. Connect the battery.

Move the vehicle back and forth to allow the steering to centralize. Make sure the wheel spokes are evenly positioned. Check and, if necessary, adjust the front-wheel alignment.

Wheel alignment check

27. **Worksheet** Remove and refit PAS pump.

To gain access to the pump, it may be necessary to remove other components such as the alternator or air-conditioning pump. Refer to the manufacturer's recommendations before starting work.

PAS pump in position

Remove PAS Pump Remove the cap from the fluid reservoir. Using a suitable wrench, hold the adapter, and remove the high-pressure hose. Disconnect the low-pressure hose and drain the fluid into a container. Block the hoses and pump to prevent dust and dirt from entering. Replace the reservoir cap.

Removing the hoses

Drive Belt Slacken and remove the adjustment bolts situated underneath the pump. Remove the drive belt. Remove the two pivot bolts, withdraw the pump and bracket from the vehicle.

Adjustment bolts

Pivot bolts

Belt

Pump

Refit PAS Pump Fit the pump assembly to the engine bracket, feeding the drive belt over the pulley. Locate and secure the two pivot bolts but do not fully tighten. Fit the adjustment bolts. Adjust the drive belt to the correct tension and tighten the pivot nuts and bolts. Remove the blanking plugs, connect the inlet hose to the adapter and tighten to the correct torque. Fill the fluid reservoir to the "MAX" mark, and fit the filler cap. Observe system operation and check for leaks.

Top up the PAS reservoir to the level mark

28. **Worksheet** Remove and refit front suspension strut and spring.

Apply the handbrake

Support on a hoist

Remove the wheel

Support the caliper

Apply the handbrake, jack up the front of the car and support it on stands. Remove the road wheel. To prevent the lower arm assembly hanging down while the strut is removed, screw a wheel bolt into the hub, then wrap a piece of wire around the bolt and tie it to the car body. This will support the weight of the hub assembly.

Removal Unclip the brake hose and wiring harness from any clips on the base of the strut. Slacken and remove the lower bolts securing the suspension strut to the steering knuckle. From within the engine compartment, unscrew the strut upper mounting nuts. Carefully lower the strut assembly out from underneath the wing.

Remove the lower bolts

Remove the upper fixings

Warning Before dismantling the front suspension strut, a special tool to hold the coil spring in compression must be obtained. Any attempt to dismantle the strut without such a tool is likely to result in damage and/or injury.

Suspension strut

Overhaul With the strut removed from the car, clean away all external dirt and then mount it upright in a vice. Fit the spring compressor, and compress the coil spring until all tension is relieved from the upper spring seat. Slacken the nut while holding the strut piston with an Allen key or other such tool. Remove the mounting nut and washer, and lift off the rubber mounting plate. Remove the gasket and hollow washer followed by the upper spring plate and upper spring seat. Lift off the coil spring and remove the lower spring seat.

Fit spring compressors…

With unit mounted in a vice…

Remove the mounting unit…

Remove the spring

Examination Examine all the components for wear, damage or deformation, and check the upper mounting bearing for smooth operation. Examine the strut for signs of fluid leakage. Check the strut piston for signs of pitting along its entire length, and check the strut body for signs of damage. While holding it in an upright position, test the operation of the shock absorber by moving the piston through a full stroke, and then through short strokes (50 to 100 mm). In both cases, the resistance felt should be smooth and continuous.

Strut insert – damper/shock

Rebuilding If any doubt exists about the condition of the coil spring, carefully remove the spring compressors, and check the spring for distortion and signs of cracking. Replace the spring if it is damaged or distorted, or if there is any doubt as to its condition. Inspect all other components for damage or deterioration. Fit the spring seat and coil spring onto the strut, making sure the spring end is correctly located against the strut stop. Fit the upper spring plate. Fit the mounting plate nut and tighten it to the specified torque. Ensure the spring ends and seats are correctly located.

Coil spring removed from the strut

Refitting Maneuver the strut assembly into position, and fit the upper mounting nuts. Locate the knuckle with the suspension strut, and insert the retaining bolts. Tighten both the lower and upper bolts to the specified torque. Tighten the strut upper mounting nuts to the specified torque. Clip the hose/wiring back onto the strut, and then refit the road wheel. Lower the car to the ground and tighten the wheel bolts to the correct torque.

Refitting the strut

29. **Worksheet** Remove and refit rear suspension spring.

Block the front wheels; jack up the rear of the car and support on stands. Remove the road wheel.

Rear suspension spring

Removal If necessary, remove the bolts and plates securing the driveshaft to the final drive unit flange. Free the driveshaft and support it by tying it to the car under the body. Position a jack or stand underneath the rear of the trailing arm, and support the weight of the arm. Slacken and remove the shock absorber lower mounting bolt. Slowly lower the trailing arm. Keep an eye on the brake hose to ensure no excess strain is placed on it. Withdraw the coil spring and its seats.

Supporting the trailing arm

Removing the fixings

Inspection Inspect the spring closely for signs of damage, such as cracking, and check the spring seats for signs of wear. Renew worn components as necessary.

Inspect the spring carefully

Refitting Fit the upper and lower spring seats, making sure they are correctly located. Engage the spring with its upper seat. Hold the spring in position and carefully raise the trailing arm while aligning the coil spring with its lower seat. Raise the arm fully and refit the shock absorber lower mounting bolt, tightening it to the correct torque. If removed, connect the driveshaft to the final drive unit. Refit the road wheel then lower the car to the ground. Tighten the wheel bolts to the specified torque.

Fitting the lower fixing

30. **Additional Worksheet** Remove and refit stabiliser bar

31. **Additional Worksheet** Remove and refit suspension torsion bar

32. **Additional Worksheet** Remove and refit leaf spring and bushes

33. **Additional Worksheet** Remove and refit front upper suspension arm

34. **Additional Worksheet** Remove and refit front lower suspension arm

35. **Additional Worksheet** Remove and refit rear suspension control arm

36. **Additional Worksheet** Remove and refit rear strut and spring

37. **Additional Worksheet** Remove and refit wheel bearings

38. **Additional Worksheet** Remove and refit tie rods

39. **Additional Worksheet** Remove and refit steering wheel and SRS

40. **Additional Worksheet** Remove, inspect and replace pitman arm, relay rod, idler arm and steering damper/shock absorber

Fault diagnosis

Checking the System

Introduction System performance checks are routine activities that occur during all servicing work. They start at pre-delivery and continue for all scheduled service intervals.

Wheel and tires

41. **Worksheet** Checking wheels, tires, wheel covers, and torque.

These are simple checks but none-the-less very important. Tires play a vital role, particularly in poor weather conditions.

Tire Checks Tires are an important safety component. Check carefully all around the tire, inside and out. Look for tread wear and damage to the sidewalls. Feel the pattern of the tire from left to right, and right to left, to check for signs of feathering. This is usually caused by an incorrect toe setting. Check that the tire shape is uniform and that there are no cuts or bulges.

Illegal tire

Wheel Checks Some wheel faults can cause slow deflation of the tire. Alloy wheels with signs of cracking should be replaced immediately. A damaged steel wheel may adversely affect the vehicle's handling.

Damaged wheel

Wheel Cover Security Many plastic wheel covers can be found on the side of busy roads. This is because they have been incorrectly installed or have been damaged by striking curbs. Make sure covers are installed correctly and that the valve stem is positioned so it is not under stress from the cover.

Wheel trims can come loose

Wheel Nut or Bolt Security Wheel nuts and bolts should always be tightened with a torque wrench. Remember that the next person to remove the wheel may be your customer if the tire gets a puncture. Using an air gun to install the nuts or bolts is fine. However, keep the gun torque turned low and finally tighten to the manufacturer's setting with a torque wrench.

Torquing wheel nuts

Valves Check valve stems for signs of leakage and make sure the dust cap is installed. The cap not only prevents dust entering the valve, it is also a secondary air seal. Rock the valve gently from side to side to check for leaks.

Tubeless tire valve

Summary System checks for wheels and tires are quite simple. However, they are important. Many serious and fatal accidents are caused by wheel and tire failures.

42. **Worksheet** Check steering components.

Steering wheel out of alignment

Steering wheel correctly aligned

These checks are usually carried out as part of a service or if problems are suspected. Clearly, the steering components are parts of a major safety system. Therefore, checks must be carried out thoroughly. Check that the steering wheel alignment is correct. The spokes should be even when the wheels are in the straight-ahead position.

Security and Steering Freeplay Column security can be checked by rocking the steering wheel up and down, and side to side. Check that any adjustment mechanism is secure. Freeplay is checked by noting the movement of the steering wheel without the road wheels moving. Normally, this should not exceed about 2.5cm or 1 inch. The steering shaft and universal joints are easy to check. Side-to-side movement tests bearings, and a rocking movement tests the joints.

Steering Rack or Box Check mounting bolts and rubber components that secure the steering rack. Look for splits and oil leaks from the rack gaiters or box seals. Ball joints/track rod ends should be checked for excessive wear. As the steering wheel is rocked, look for excessive "lift" in the joints.

Swivel Joints or Kingpins To check swivel joints or kingpins, first jack up and support the vehicle. Get an assistant to rock the road wheel top and bottom. Look from the inside to check movement. Very little if any should be observed. The wheel bearings can be checked at the same time.

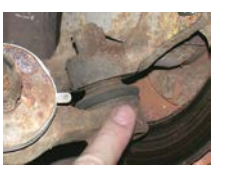
Swivel joints show freeplay here

Kingpins show freeplay here

43. **Worksheet** Check and diagnose steering faults.

Checking the steering

Diagnosis of steering faults will require detailed examination of the system. Checking for tire wear and a road test are methods used.

Unusual Tire Wear Before diagnosing steering faults, it is important to carry out the basic checks as described in the "Check Steering Components" worksheet. Fix any faults found. Tires are good indicators of steering problems so check these first. Look for unusual wear patterns on the front tires. Feathering (feels rough in one direction, like feathers) on the outer or inner edges of both tires usually indicates a tracking (toe-in/out) problem. Wear on just one tire could indicate a camber or swivel axis problem. Make sure you know if new tires have been recently fitted.

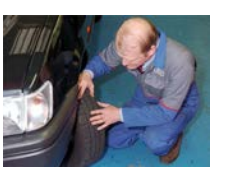
Check the tires for feathering

Road Test Road test the vehicle and check for wander, drift, self-centering and driver effort. Wandering or drift may be due to freeplay in any part of the linkages. Self-centering action will reduce if any joints are tight or seized. Driver effort will be affected by tight joints but also the operation, or otherwise, of power assistance (if fitted). If no faults are found, carry out a full steering geometry test as described in the appropriate worksheet.

Summary Steering components make a contribution toward safety of the vehicle. System performance checks are therefore important. Cars are used at high speed and sudden breakdowns can be dangerous. Therefore, it is important that the systems function correctly at all times.

Busy traffic!

44. **Worksheet** Check suspension and steering operation.

Car supported on stands

Raise the front end of the vehicle and support it securely on stands placed under the frame rails. Because of the work to be done, make sure the vehicle cannot fall from the stands. Alternatively, use of a wheel free ramp is ideal.

Check the Suspension Visually check the suspension and steering components for wear. Indications of a fault in these systems are: excessive play in the steering wheel before the front wheels react, excessive sway around corners, body movement over rough roads, or binding at some point as the steering wheel is turned. Check the wheel bearings by spinning the front wheels. Listen for any abnormal noises and watch to make sure the wheel spins true. Holding the top and bottom of the tire, pull inward and then outward on the tire. Any movement indicates a loose wheel bearing or swivel joint assembly. If the bearings are suspect, they should be replaced.

Underneath the Vehicle From underneath the vehicle, check for loose bolts, broken or disconnected parts and deteriorated rubber bushings. Make sure you look at all suspension and steering components.

Steering Components Check the track rod end joints for wear by looking for movement as the steering is rocked. As an assistant turns the steering wheel from side-to-side, check the steering components for free movement, chafing, and binding. If the steering does not react with the movement of the steering wheel, try to determine where the freeplay is located. Steering systems use flexible rubber boots, which should be carefully checked for tears, oil contamination, or damage. Finally, lower the vehicle and report any faults found.

List a suitable method of checking suspension systems generally

45. **Worksheet Check and d**iagnose suspension faults.

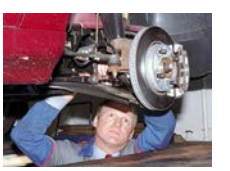
Checking the suspension system

Diagnosing suspension faults requires a combination of techniques. The various techniques are described in the different worksheets associated with this learning program. However, three important aspects are discussed over the next few screens.

Shock Absorber Operation Shock absorbers are an important part of the suspension system. They are quite easy to test. As you press on one corner of the vehicle, it should bounce back just past the start point and then return to the rest position. Repeat on all four corners. Make sure you press down on a strong section of the vehicle – some body panels are easily distorted!

Suspension Bush Condition All the rubber bushes used for mounting suspension components can be tested with a simple lever. This will indicate excessive movement, cracks, or separation of rubber bushes.

Trim Height Trim height, is a measurement usually taken from the wheel center to a point on the car above. It is available in most data books.

Sketch how to measure trim height

Summary System performance checks are often quite simple. However, they are important. Cars are used at high speed and sudden breakdowns can be dangerous. The systems should therefore function correctly at all times.

Read the previous section again and note down some key bullet points here:

-
-
-
-
-

Inspect and Measure Components

Introduction The main inspections and measurements carried out on the system are included in this section. Inspections should take place at scheduled service intervals, and if problems have been reported.

46. **Worksheet** Measure tire tread depth and report on condition.

It is important to check all of the wheels on a vehicle, including the spare. Check in particular for tread depth, damage and 'nails' that may cause a slow leak. The current tire law is stated over the next few screens. However, double check current and local regulations, because it may change.

Tire tread measurement

Bias-Ply Tires It is dangerous to mix bias-ply and radial-ply tires on a vehicle. Only very old vehicles use bias-ply tires. This is, therefore, not a problem you are likely to encounter. The safest and best method is often to install radial tires all round. However, you must refer to the manufacturer's recommendations if in doubt.

The Legal Bit About Tires The laws relating to tire condition may be different from state to state. It is therefore very important to check your local laws.

In many states, it may be an offence, to use a vehicle on the road if any of its tires have any of the faults, described over the following screens.

Stay legal

Tread Depth A car tire may be illegal if it has:

A tread depth of less than 2/32" throughout at least 75% of the tread. It must also have visible tread on the rest.

This tire is on the tread limit

Cuts and Bulges A car tire may be illegal if it has:

A cut deep enough to reach the plies in excess of 25 mm (or 1 inch) or 10 per cent of the section width of the tire, whichever is the greater.

A lump or bulge caused by separation or other structural fault.

Serious cut in the sidewall!

Cords and Re-Cuts A car tire may be illegal if it has:

Any portion of the ply or cord body exposed.

Been re-cut or re-grooved.

Exposed cords

Suitability A car tire may be illegal if it is:

Installed on a vehicle for which it is unsuitable.

Incorrectly inflated.

Used with tires of different types of construction installed on the same axle.

A flat tire!

Pressures Correct tire pressures are important for the safe operation of the vehicle. Always follow the manufacturer's recommendations. Make sure your pressure gauge is in good condition. This is often a source of errors. Correct pressure will extend the life of a tire considerably.

Correct tire pressures are important

Checking Tread Depth Tread depth is checked with a depth gauge. Remember that a tire should be changed just before the tread reaches its limit – not just after! Wear indicators are formed as part of the tread pattern. These act as a useful guide.

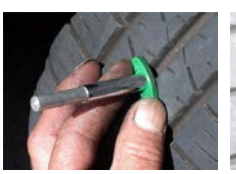

Depth gauge in use

Tire wear indicator

Wheel Dimensions of a wheel can be measured in a number of ways. Some of the measurements need the tire to be removed. These measurements are carried out to check that a wheel is correct for the vehicle on which it is to be used.

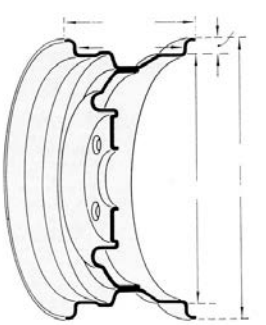

Dimensions of a wheel

Setting Wheel Nut Torque There is no substitute for torquing wheels. Lug nuts are often over tightened by using air guns set on full power. This often means that if a customer has to change a wheel, they can't get the nuts loosened. Furthermore, it is possible to damage the wheel studs, nuts, or bolts, if they are over tightened. It's also possible to warp brake rotors, cause brake pulsations, and other vibrations.

Correct torque is important

Summary Wheels and tires are simple subject areas to learn. However, they are fundamental to safety. Do not make any compromises. Keep your customers and yourself safe.

47. **Worksheet** Measure and adjust tracking (toe in/out)

Tracking (Toe-In/Out) If adjustment is required, check the position of the steering wheel. Adjustment is made by changing the overall length of the track rod. If the spokes are even, make equal adjustments to each end of the track rod. If the spokes are NOT even, turn the wheel until they are and then adjust each end of the track rod, such as to bring the wheels to the correct position.

Steering wheel correctly aligned

Track Rod Adjustment To adjust track rod length, undo the lock nut and then turn the rod, which is threaded into the track rod end. Tighten the lock nuts and check the alignment again. Carry out further adjustment if required - it is quite usual for accurate adjustment to need two or three changes. Secure all components and remove gauges.

Loosen the lock nut and adjust track rod length

48. **Worksheet** Measure castor, camber and swivel axis/kingpin inclination.

First, carry out the basic checks as described in the "Check Steering Components" worksheet. Position the front wheels of the vehicle on turn plates.

Car with its wheels on turn plates

Steering Geometry Connect measuring equipment to the vehicle as outlined in the manufacturer's instructions. Record readings as follows:

Camber

Castor

Swivel axis/king pin inclination (SAI/KPI)

Offset

Tracking (toe-in/toe-out).

Taking Readings The way readings are taken will vary depending on the type of equipment you are using. Lasers are used by some types to allow direct readout from a scale. For different measurements, numerical displays are used.

LCD readout

Laser appears here

Summary Some repairs can involve significant work. However, do not make any compromises. Keep your customers – and yourself – happy and safe.

49. **Worksheet** Inspect and measure damper operation.

Perform a bounce test by pushing down on one corner of the vehicle. Take care not to damage any of the body panels.

Shocks in position

Shock absorbers Check that the corner rises once and then settles. If it oscillates more than once, the shock absorber is worn. Visually inspect the shock absorber for leakage. A light oil film near the seal is acceptable, but replace if leakage is excessive. Inspect the shock absorber rod for damage such as bending, scratches and corrosion. Replace if any is found. Inspect the shock absorber body and replace if damaged. Light corrosion is acceptable. Check security of all mounting bolts or nuts.

50. **Worksheet** Measure trim height.

Position the vehicle on level ground. Bounce the suspension to ensure it has settled. Also, make sure no heavy loads are being carried.

Trim height is measured between two set points

Trim Height Refer to the manufacturer's specifications for trim height setting and measurement position. This is usually from the wheel center to a fixed point on the body. Note that trim height measures the suspension setting, not ground clearance. Take measurement using a suitable measuring tape. Compare with specifications.

Checking trim height

Suspension System Incorrect trim height measurements usually mean that suspension components are broken or badly worn. Carry out a full system inspection as described in the appropriate worksheet.

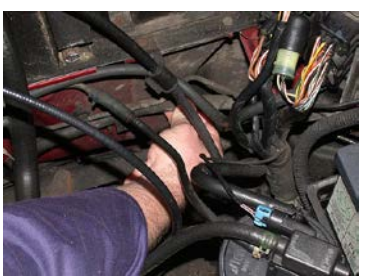
Inspecting the system

Hydrolastic Suspension Connect a suspension fluid pump to each valve in turn. Follow the manufacturer's instructions to 'pump up' the system to the correct trim height. Remove fluid pump. Road test the vehicle, recheck trim height, and adjust again if required.

Pumping up a Hydrolastic system

Summary Some repairs can involve significant work. However, do not make any compromises. Keep your customers, and yourself, happy and safe.

Read the previous section again and note down some key bullet points here:

-
-
-
-

Faultfinding and Inspections

Introduction The secret with finding faults is to have a good knowledge of the system and to work in a logical way. Use service manual information and recommended procedures. This section includes general inspection procedures, and specific ones for wheels and tires.

Tire Problems This lists some of the problems which can occur, if tires or the vehicle are not maintained correctly.

Symptoms - Possible cause
Bald patches - Unbalanced wheels or unusual driving technique
Feathering - Toe not set correctly
Wear just on one side of the tread - Incorrect camber
Wear in the center of the tread all round the tire - Over-inflation
Wear on both outer edges of the tread - Under-inflation

Symptoms and causes

Symptoms and Faults Remember that a symptom is the observed result of a fault. The following four screens each state a common symptom and possible faults. It is important to note that faults in the steering and suspension systems can produce symptoms that may appear to be caused by the tires.

Vehicle Wanders Symptom Faults that can cause this are:

Wheel alignment is incorrect

Tire pressures are incorrect

Mixing tire types on the same axle

Wheel bearings are worn.

Stiff Steering Symptom Faults that can cause this are:

Steering wheel

Wheel alignment is incorrect

Tire pressures are too low

Ball joints or rack is seizing.

Wheel Wobble Symptom Faults that can cause this are:

Wheels are out of balance

Suspension linkages are worn

Wheel alignment is incorrect.

Understeer or Oversteer Symptom Faults that can cause this are:

Driving style may be a cause[4]

Tire pressures are incorrect

Mixing tire types on the same axle

Freeplay in the suspension or steering system is excessive.

Systematic Testing Working through a logical and planned systematic procedure for testing a system is the only reliable way to diagnose a problem. Use these six stages of fault finding as a guide.

Verify the fault

Collect further information

Evaluate the evidence

Carry out further tests in a logical sequence

Correct the problem

Check all systems.

51. **Worksheet** Reported symptom - heavy steering.

Checking for heavy steering

If the reported symptom is heavy steering, carry out the stages as described in the worksheet. Remember, similar symptoms can be produced from different vehicle systems.

Tire Pressure Warning System An on board tire pressure warning system means that a glance at the instrument panel is enough to tell the driver that the tire pressures are all correct. BERU has developed an electronic tire pressure monitoring system. Each wheel has its own indicator light, which is illuminated if the pressure falls below a set value. Incorrectly inflated tires cause loss of control and increased fuel consumption. The idea is to give the driver warning of reduced pressure, before tire failure occurs.

System components (Beru)

Excessive Freeplay at Steering Wheel Possible faults that could cause this symptom are:

Play between the rack and pinion or in the steering box

Ball joints or tie-rod joints worn

Column coupling is loose or bushes worn.

Vehicle Wanders Possible faults, as well as those described on the previous screen, that could cause this symptom are:

Alignment check

Alignment incorrect

Incorrect tire pressure or mix of tire types is not suitable

Worn wheel bearings.

Stiff Steering Possible faults that could cause this symptom are:

Set the tire pressures accurately

Wheel alignment incorrect

Tire pressures too low

Ball joints or rack seizing.

Wheel Wobble Possible faults that could cause this symptom are:

Wheels out of balance

Wear in suspension linkages

Alignment incorrect.

Understeer or Oversteer 💻 Possible faults that could cause this symptom are:

Tire pressures incorrect

Dangerous mix of tire types

Excessive freeplay in suspension or steering system

Driving style.

Power Steering Functional Check When looking into customer concerns about power steering, the following points should be checked first:

P
AS reservoir

Hydraulic fluid level in the reservoir should be correct. If necessary, top off and bleed the system.

Power steering pump drive belt tension

Fluid leaks from the steering system.

Power Steering Fault Diagnosis Start the engine and check whether the hydraulic hoses react to the pressure generated by the power-steering pump.

If the hydraulic hoses react to the pressure of the power-steering pump, suspect a defect in the steering gear.

If the hydraulic hoses do not react, suspect a defect in the power-steering pump.

Systematic Testing Working through a logical and systematic procedure for testing a system is the only reliable way to diagnose a problem. Use these six stages of faultfinding as a guide:

Verify the fault

Collect further information

Evaluate the evidence

Carry out further tests in a logical sequence

Fix the problem

Check all systems.

Faultfinding Procedure As an example of how the stages are applied, assume the reported symptom is heavy steering. Carrying out the procedures outlined over the next five screens, would be a recommended method.

St
eering system

Verify the Fault Road test the car, with the customer if possible, to check the symptoms. Remember, it is not that you don't believe the customer! It is often difficult for a customer to describe symptoms without technical knowledge.

Talk to the customer

Collect Further Information Ask the customer if the problem has just developed. Check the obvious first, for example, the tire pressures. Check to see if the vehicle is overloaded and look for anything unusual such as tire wear.

Tire wear

Evaluate the Evidence Remember at this point to stop and think! If the problem has developed slowly, it may suggest a component such as a kingpin is seizing. Assuming tire pressure and condition is as it should be, move on to carry out further tests.

Stop and think!

Carry Out Further Tests For example, jack up and support the front of the car. Operate the steering lock to lock. Disconnect a track rod end and move the road wheel on that side. Check how easy it is to move. If the steering is still stiff, repeat the test on the other side. Narrow down the fault in this way until the problem is found.

Disconnecting a track rod end

Rectify the Problem If the fault is in the steering rack, then this should be replaced or overhauled. Track rod ends or swivel joints should be replaced with approved parts. Always set the tracking after this type of work.

Steering rack

Check All Systems Test the operation with a road test and inspect all other related components for security and safety. It is possible, when fixing one fault, to accidentally knock something and cause a new problem. It is also possible that another fault exists, and it may appear to the customer that you have caused it! For both of these reasons, check that ALL systems work correctly after any repairs have been carried out.

Excessive Pitch or Roll when Driving Possible causes of this symptom are:

Shock absorbers worn

Anti-roll bar broken or mountings worn

Tires not inflated correctly.

Shock absorber as part of the front strut

Car Sits Lopsided Possible causes of this symptom are:

Broken spring

Leak in hydraulic suspension

Suspension body mounting collapsed.

Coil spring from under the car

Knocking Noises Possible causes of this symptom are:

Excessive free-play in a suspension joint

Worn rubber bushes

Shock absorber rod bent.

nner suspension joints

Excessive Tire Wear Possible causes of this symptom are:

Steering/suspension geometry incorrect, which may be due to accident damage

Incorrect tire inflation

Worn rubber bushes or mountings.

Worn tire

Systematic Testing Working through a logical and planned systematic procedure for testing is the only reliable way to diagnose a problem. Use these six stages of faultfinding as a guide.

Faultfinding Procedure As an example of how the stages are applied, assume the reported symptom is poor handling. Carrying out the procedures, outlined over the next five screens, would be a recommended method.

Verify the Fault Road test to confirm the fault. Remember to take the car through a variety of driving conditions. Taking the customer on the road test is often a useful way of verifying a fault.

Collect Further Information With the vehicle on a lift, inspect obvious items such as tires and shock absorbers. Also, talk to the customer. Ask when and how the fault developed.

Tires

Shock absorbers

Swivel joints

Evaluate the Evidence Consider if the problem is suspension related or in the steering. You may have decided this from road testing. However, stop and think about the evidence you have gathered. A problem that developed slowly is more likely to be a component that you would expect to wear out; shock absorbers for example.

Carry Out Further Tests Inspect all the components of the system you suspect. For example, shock absorbers for correct operation, and suspension bushes for condition and security. Let's assume the fault was one front shock absorber not operating to the required standard.

Testing a shock absorber off the car

Rectify the Problem It is usually recommended that shock absorbers be replaced in pairs. This is partly because, if one has worn, the other will soon. However, it is also because the handling will be badly affected if the performance of the two shock absorbers is unequal. Renew both of the shock absorbers at the front to ensure balanced performance.

State why the shock absorbers on this car are not good!

Check All Systems. Test the operation with a road test and inspect all other related components for security and safety. It is possible, when fixing one fault, to accidentally knock something and cause a new problem. It is also possible that another fault exists, and it may appear to the customer that you have caused it! For both of these reasons, check that ALL systems work correctly when any repairs have been carried out.

Double check all systems

Summary Faultfinding work is rewarding – when you find the fault! Remember to always work in a logical way. The stages of faultfinding can be applied to all systems on the vehicle, complex or simple.

52. **Additional Worksheet** Inspect electronically controlled suspension

53. **Additional Worksheet** Inspect electronically controlled steering system

Read the previous section again and note down some key bullet points here:

-
-
-
-
-

Electrical/Electronic Systems

Safety, tools & equipment and customer care

Health and Safety

Safety First Before carrying out any service or repair work, refer to all appropriate health and safety guidelines. Always follow all safety procedures and observe safety precautions when working on vehicles. Some specific electrical hazards are listed in this section.

Be smart, be safe[2]

Check safety of equipment

Protective Clothing Overalls should ideally be worn at all times. This protects your clothes as well as your skin. Gloves, goggles, breathing masks, hats and strong footwear may also be necessary.

Personal protective equipment in use

Skin Contact When servicing vehicle systems, avoid skin contact with new and used engine oils. Use barrier cream or non-porous gloves. Be careful with hot oil, particularly when carrying out oil draining operations. Never keep oily rags in overall or other pockets and change out of oil contaminated clothing as soon as reasonably possible.

Wear gloves or use barrier cream

Working Below Vehicles There are a number of hazards to avoid when working below vehicles. One is the risk of hitting your head, which can obviously cause injury. Another risk is the possibility of getting rust and dirt in the eyes. Avoid these problems by wearing a cap and goggles whenever working below vehicles. The vehicle must always be supported safely before working underneath or along side it.

Car on a ramp

Fuses When replacing fuses, only use the value recommended by the manufacturer. Don't assume the one that was fitted is correct. Most cars have the value printed on the fuse box lid. If a value, which is too high, is fitted, serious damage could result if a fault occurs. A value that is too low will blow when no fault exists.

Fit the recommended value only

Electrical Sparks Electrical sparks are the most common cause of vehicle fires in the workshop. These can occur during the connection and removal of electrical terminals. Sparks also occur when the engine is cranked with the ignition on and the spark plugs removed. Disconnect the coil or connect the HT cables directly to ground to prevent this.

Caution/Attention/Achtung! All types of fuel and particularly the vapors are highly flammable. They can be ignited from a number of sources. Any naked flame, a short circuit, a cigarette, or under the right conditions a hot object, will start a fire.

Short Circuits If a wire or tool is allowed to join the battery positive connection to the negative connection, a serious short circuit will result. A wire would become extremely hot and, in addition to the obvious fire risk, would burn through whatever part of your body it was touching. The demonstration shown here by carried out by trained fire experts. Do NOT attempt to copy it. The same results occur if shorts are made on the vehicle. Be care.

High Voltages Ignition circuits use pulses of electrical energy in excess of 10,000 volts. These are created in the ignition coil and conducted through the coil and spark plug wires. Although shocks from ignition systems are rarely fatal, the reaction to the shock can cause serious injury. The reactions can cause involuntary movement of hands and arms, or whole body movements, into areas of hazard such as running engines. Some other vehicle systems, such as gas discharge headlights, also use high voltages.

Battery Charging Always charge batteries in a well-ventilated area, switch off the battery charger, and leave for about five minutes before disconnecting the battery leads. This will avoid a high concentration of gas, and the risk of a spark, being brought together near the battery. Always ensure that the battery charging area is a no smoking area and that notices are posted to ensure that this rule is observed. The gas that is given off from a battery during charging is a mixture of hydrogen and oxygen. This is a highly flammable and potentially explosive mixture. It can be ignited with a spark or other hot or burning object.

Use a well-ventilated area and…

…Switch off charger before disconnecting

Flammable Gas The gas that is given off from a battery during charging is a mixture of hydrogen and oxygen. This is a highly flammable and potentially explosive mixture that can be ignited by a spark or by a hot or burning object.

There is a fire and explosive risk from hydrogen gas

Battery Acid Battery acid is poisonous and corrosive. Although the use of concentrated acid is no longer common in motor vehicle workshops (where it was mixed for the first fill on new batteries) it is still important to understand the risks involved. The dilute acid in the battery can cause skin burns and damage to the vehicle. Wear eye protection when handling batteries and during charging operations.

Battery acid is dangerous…

…Wear goggles

Battery Polarity When fitting and connecting a battery, it is important to observe the correct polarity. This is necessary to reduce the risk of damage to the electrical and electronic systems on the vehicle. A memory saver device may be needed for some vehicles. Check with the vehicle manufacturer's data before disconnecting the battery.

Observe correct battery polarity

Memory saver

Battery Connection When connecting and disconnecting the battery leads, ensure that all electrical systems are switched off. This will reduce the risk of arcing, which can cause damage to electronic components. Always connect and disconnect the ground lead first and, when reconnecting, touch the lead to the battery terminal and look for arcing. Arcing occurs when a circuit or a short circuit is made.

Switch off…

All electrical systems…

Ground Cable off First! 💻 Always connect and disconnect the ground cable first and, when reconnecting, touch the end to the battery terminal and look for arcing. Arcing occurs when a circuit or a short circuit is made.

Battery Short Circuits Be careful never to allow any metal object to bridge the battery terminals, as this will cause a short circuit with a possible explosive reaction. Do not use the battery top as a convenient place to rest tools or components that have been removed from the vehicle.

Do not use the battery to store tools

Arcing If arcing is observed, check that all circuits are switched off. If this does not prevent arcing, check to see whether a cable has been pulled off or damaged during work on the vehicle. Problems of this type can cause a short circuit. By checking in this way, it is possible to avoid the risk of any short circuit causing a fire.

Battery Charging Always charge batteries in a well-ventilated area. Switch off the battery charger and leave for about 5 minutes before disconnecting the battery cables. This will prevent the chances of a high concentration of gas and a spark meeting near the battery. Always ensure that the battery charging area is a no-smoking area and that notices are posted to ensure that this rule is observed.

Use a well ventilated area and…

…Switch off charger before disconnecting

Disposal of Batteries The disposal of batteries and battery acid is subject to strict environmental regulations. If procedures are not in place in your workshop, seek advice from the appropriate governmental agency. Never dispose of batteries with normal waste. Many areas have a collection site for hazardous materials and batteries can normally be taken to those sites.

Battery disposal in accordance with local environmental regulations

Lifting Batteries Be careful when lifting batteries that they are not tipped to the point where the acid escapes. When using lifting equipment of the cross grip type, take care that the battery case is not fractured.

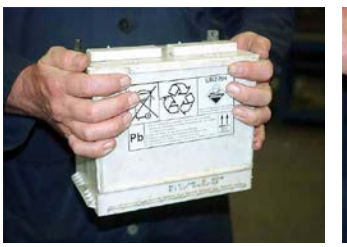
There is a risk of acid spillage…

…When lifting batteries

Lifting Heavy Objects Batteries should be treated as heavy objects when being lifted. Care should also be taken due to the acid content. It is therefore important to plan the lift procedure beforehand and to have the correct equipment available if required. Many modern vehicle batteries that are more than 20 kg (40 lbs) in weight are fitted with lifting ropes and handles. Check that these are in good condition before lifting.

Battery lifting tool[5]

Component and Test Meter Ratings Check that components are the correct rating or value before fitting. For example, a 24V bulb fitted to a 12V system would be dim. A stoplight bulb of the wrong wattage would not only be illegal – it would be very dangerous. Ensure that test meters are connected correctly – voltmeters in parallel and ammeters in series for example. Finally, make sure that the meter is set on the correct range.

Meter in use

Running Engines 💻 Running engines are sometimes needed for diagnostic and system checks. A running engine presents two hazards: the first is the risk from rotating components and the second from the accumulation of exhaust gas in the workshop.

Electrically Driven Fans An electrically driven fan is switched on automatically when the temperature of the coolant in the radiator rises above the switch operating temperature. This can occur even when the ignition is switched off. Always keep fingers out of the fan cowl and always remove the battery ground lead, when the engine does not need to be running, for diagnostic tests.

Rotating Components Remain aware of rotating parts such as the fan, belt and pulleys in the areas where you are likely to be working. An electrically driven fan is switched on automatically when the temperature of the coolant in the radiator rises above the switch operating temperature. This can occur even when the ignition is switched off. Always keep fingers clear of the fan.

Exhaust Extraction Prevent the buildup of exhaust gas in the workshop by using extraction equipment or by providing good ventilation.

Hot Components When used for prolonged periods, vehicle components can become very hot. In particular, take care not to touch the exhaust when working under the vehicle or on the engine.

Be aware of hot exhausts

Jacking and Supporting Only use the recommended jacking and support points when lifting a vehicle. Refer to the manufacturer's instructions if unsure. Ensure the jack and support stands, which must be used at all times, have an appropriate safe working load (SWL).

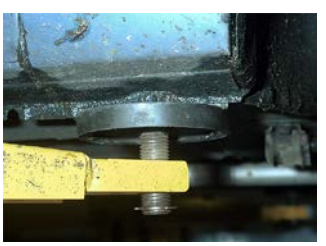
Support point for a ramp

Original Equipment In consideration of other people's property, always be careful to use approved parts. Original equipment manufacturer's (OEM) parts may be required to meet safety regulations.

Use good quality parts

Read the previous section again and note down some key bullet points here:

-
-
-
-

Tools and Equipment

Introduction Components will usually be removed, inspected, and repaired or replaced when a defect has been diagnosed. Other components are replaced, or stripped and cleaned, at scheduled mileage or time intervals. Refer to the Routine Maintenance section for details on these items.

Quality tools and equipment are essential[2]

Recommended Procedures The descriptions provided in this section deal with the components for individual replacement, rather than as a part of other work. Always refer to a workshop manual before starting work. You will also need to look for the recommended procedure, special tools, materials, tightening sequences and torque settings. Some general and specific tools and pieces of equipment are described on the following screens.

Refer to data as required

General Toolkit General tools and equipment will be required for most tasks. As your career develops, you will build a collection of tools and equipment. Look after your tools and they will look after you!

Electrical Tools There are only a few tools specifically associated with electrical systems. Some of the main ones are covered over the next few screens.

Electrical components

Terminal Kit Many terminal kits are available. They usually consist of a selection of terminals and special pliers to crimp the terminals on to the wire.

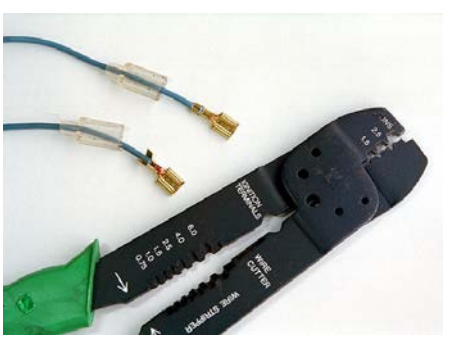

Crimping pliers and new terminals

Wire Strippers With practice, you will be able to strip wire using side cutters. However, special tools are available to make the job easier. A number of different types are shown here.

Selection of wire strippers[5]

Soldering Iron 💻 Most soldering irons are electrically heated. However, there are some very good gas powered types now available. The secret with a soldering iron is to use the right size for a specific job. One suitable for delicate ICs and circuit boards will not work on large alternator diodes. Even more damaging would be to use a large iron on a small circuit board!

Paper Clip Not found in Snap-on or other catalogs, but a very useful tool. It is not only ideal for bridging terminals, as shown here; it can also be used for clipping paper together!

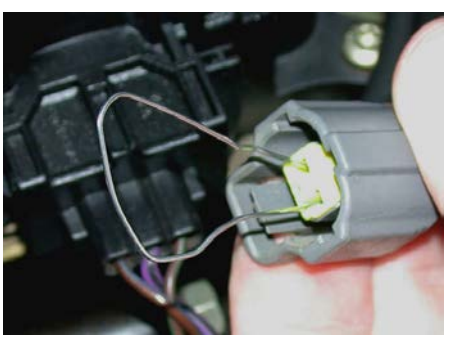

Paper clip in use

Torque Wrench A good torque wrench is an essential piece of equipment. Many types are available but all work on a similar principle. Most are set by adjusting a screwed cylinder, which forms part of the handle. An important point to remember is that, as with any measuring tool, regular calibration is essential to ensure it remains accurate.

A torque wrench is a useful tool[5]

Air Guns 💻 The whole point of power tools is that they do the work so you don't have to! Most air guns have an aluminum housing. This material is lightweight but has a long life. Air guns produce a 'hammer' action. Because of this, impact sockets should be used. Normal sockets can shatter under this load. It is important to remember that air tools need lubricating from time to time.

Jacks and Stands Most jacks are simple hydraulic devices. Remember to make sure the safe working load (SWL) is not exceeded. Ensure that any faults with equipment such as this are reported immediately. Axle stands must always be placed under the vehicle supporting the weight – before work is carried out.

Always use stands…[5]

After jacking a vehicle[5]

Ramps and Hoists Many ramps are available ranging from large four-post wheel-free types to smaller single-post lifts. These large items should be inspected regularly to ensure they are safe.

Four post lift in use

Bearing Puller Removing some bearings is difficult without a proper puller. For internal bearings, the tool has small legs and feet that hook under the bearing. A threaded section is tightened to pull out the bearing. External pullers hook over the outside of the bearing and a screwed thread is tightened against the shaft.

Internal bearing puller[5]

External bearing puller[5]

Summary Small tools such as electricians' screwdrivers or wire cutters are easy to misplace when working on a vehicle. The cost of these items if you lose them is clearly an issue, but so is the chance of damage to the vehicle. A 'spanner' in the workings of an engine can cause lots of trouble!

Small tools are easy to lose - take care

Read the previous section again and note down some key bullet points here:

-
-
-
-
-

Test Equipment

Introduction Some special test equipment is used when working with different systems. Remember, you should always refer to the manufacturer's instructions appropriate to the equipment you are using.

Test Lamp This is an underrated piece of test equipment! However, it must be used with care. The advantage of a simple test lamp is that it draws some current through the circuit under test. This allows 'high resistance' faults to be located easily. However, this is also a disadvantage because drawing current through electronic circuits can damage them. Using a test lamp for checking supplies to electrical items such as lights and motors is fine; for all other tests, a multimeter is the preferred option. If in doubt, consult manufacturers' data.

Test lamps are simple but useful

Jumper Wire A jumper wire is useful for bypassing components such as switches. However, do not short out supplies to ground using this method. As a safety feature, it is recommended that the jumper wire be fitted with a fuse. A value of 5 to 10A is probably ideal. Crocodile clips or spade terminal ends can be very useful for testing purposes.

Fused jump lead

Multimeters A multimeter is an essential tool for working on vehicle electrical and electronic systems. Digital multimeters are most suitable because of their accuracy and ease of reading. The three main functions are for voltage, current, and resistance measurement. Remember the four golden rules listed here:

Always select the correct range and test lead sockets

Voltmeters connect across a circuit in parallel

Ammeters connect in to the circuit in series

Ohmmeters should not be connected to live circuits.

Oscilloscopes An oscilloscope draws a picture of the signal. The vertical axis is voltage and the horizontal axis is time. The handheld digital oscilloscope, which allows data to be stored and transferred to a PC for further investigation, is a useful tool. The scope can be used for a large number of vehicle tests.

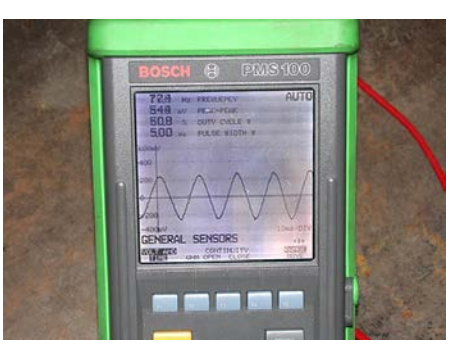

A scope showing a sine wave

Logic Probe A logic probe is a device with a very high internal resistance so it does not affect the circuit under test. Two different colored lights are used, one glows for a 'logic 1' and the other for 'logic 0.' Specific data is required in most cases, but basic tests can be carried out.

A logic probe is a useful tool[5]

Variable Resistor A variable resistor is a useful tool for testing instruments. This is particularly so for fuel and temperature gauges. The resistor can be fitted in place of the sender units. As the value is varied, the gauge should move accordingly. However, take care that the value of resistance used is within the normal range of the sensor being substituted. Always check manufacturers' data, but as a guide, the fuel sender resistance may vary between about 20 and 200 ohms. The temperature sender may vary between 200 and 4000 ohms.

Connect a resistor in place of the temperature sender

Beam Setter A beam setter is used to ensure that the aim of headlights is correct. This is also a legal requirement. The beam setter has a lens at the front to focus the light, which is reflected onto a translucent screen. A pattern is the same as would be seen on a vertical wall with the lights shining on it. Two controls are included to set the screen to the required vertical and horizontal position of the beam. Adjusters on the headlight unit are then moved to position the beam pattern accordingly. Most beam setters also include a light meter. This is used for setting the hot spot, or brightest part of the beam, to a specified direction.

Accurate alignment is important

Serial Port Communication Serial communication is an area that is continuing to grow. A special interface is required to read data. This has become known as a scanner. Many functions are possible when a scanner is connected, for example:

Identification of ECU and system

Readout of current live values from sensors

System function stimulation (allows actuators to be tested by moving them and watching for suitable response)

Programming of system changes.

A scanner is an essential tool

Dedicated Test Equipment Some equipment will only test one specific type of system. Most large manufacturers supply equipment dedicated to their vehicles. For example, Ford currently uses a system known as the FDS 2000. This equipment can be connected to diagnostic interfaces or used for standard measurements. It can be programmed from a base unit with test procedures and specifications.

FDS 2000 portable diagnostic unit[1]

Accuracy To ensure measuring equipment remains accurate, there are just two simple guidelines:

Look after the kit – test equipment thrown on the floor will not be accurate.

Ensure instruments are calibrated regularly - this means being checked against known good equipment.

Multimeter

Torque wrench[5]

Customer Care

Regular Checks Regular servicing is vital for a customer's safety. Carry out checks at all services and report your findings to the customer. Advise customers if anything will need attention before the next scheduled service interval.

Explain any unusual conditions to the customer

System Operation Some of the body's electrical systems can appear complex to customers. However, they will appreciate you taking the time to explain the operation of these systems. For example, although the handbook contains instructions, showing your customer how the CD and radio remote control operates will be helpful.

CD/Radio remote controls

Drive Belt Checks Advise customers that it is important for them to look carefully at the alternator drive belt regularly. During the winter, when very cold temperatures are experienced, it is possible for an old drive belt to "freeze" and become brittle. The telltale signs, before failure of the belt, are cracks and frays in the fabric. If these are seen, it is essential to have the drive belt replaced as soon as possible.

Keep the customer informed

Charge Warning Light Draw customers' attention to the charge warning light and explain that it not only a warning that the ignition is on, but also a main part of the battery charging circuit. If they understand this function of the warning light, they will realize how important it is to bring the vehicle to a service center should any problems with this light develop. This action could prevent a discharged battery and starting problems.

Lighting Make sure that all the lights operate correctly when you check a customer's vehicle. Pay attention to details such as panel lights or instrument lights. Even a simple fault, such as a blown instrument illumination bulb, is very important.

Is this Desmond Decker and 'His rear lights'?

Light units Some light units can be very expensive. Headlights in particular can be damaged by flying stones when the car is moving. Some manufacturers supply protective covers that fit over the front lights. If your customer uses the vehicle in off road conditions, he or she may appreciate advice about light covers.

Headlight units can be very expensive

Adjustments A correctly adjusted headlight beam pattern will ensure proper light performance. The methods for adjusting headlight alignment are covered in the Component Inspection and Repair section.

Reading the Instruments Instruments can be confusing for some customers. Take the time to explain what your customer should look for. Most will be familiar with the operation of the fuel gauge. However, the temperature gauge may give them concern. Explain that a small fluctuation in readings is normal but they should report symptoms such as high readings and long warm up times. This last point, for example, may mean the thermostat is stuck open. An early warning of this will save your customer trouble in the future.

Instrument panel

Warning Lights Warning lights are something that many of your customers will probably not notice, until one comes on unexpectedly! You may need to explain which are serious and which are not. For example, the oil pressure or charge warning lights are more serious than say low washer fluid. On most cars, red warning lights, as you would expect, are the most important.

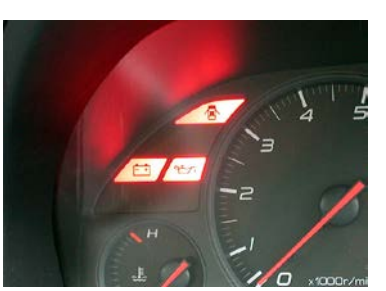
Charge and oil warning lights

Vehicle Condition Respect your customer's vehicle and take precautions to keep it clean. Repairing or checking some systems is likely to involve you working under the vehicle and then sitting in the driver's seat. Use seat covers and ensure the steering wheel is clean when you have finished.

Seat covers in use

Trip Computers Trip computers are useful, but can be confusing for some users. If necessary, explain to your customer how to set and use the different functions. A function that is often used is 'average fuel consumption'.

Setting the trip computer can be confusing

Quality Replacement Components It is often tempting to increase the profit on a job by using 'pattern' parts. These are copies of the original components. Some of these components produced by well-known companies (Bosch, for example) are excellent quality and are used as original equipment by many manufacturers. However, some pattern parts are cheap, and you get what you pay for! One of the most irritating things for a customer is to have to return the vehicle for the same job to be repeated – and it wastes your time. Use good quality parts at all times.

Bosch wiper components[4]

Safety Advice It is not possible to be specific about safety advice here because issues vary between manufacturers. Their instructions relating to safety should always be followed. One common issue is the positioning of a child or baby seat. Cars equipped with air bags (which is almost all modern vehicles) come with specific recommendations about where the seat should be fitted. Pass on this advice to your customer at all times.

Air bag position

Keep Customers Informed Some customers like to know details of what work has been done to their vehicle – and they have every right to know! This wiper motor, for example, had been changed, but was kept for the customer to see.

Wiper motor

Summary A customer who is kept informed and treated with respect will return and keep you in a job! Explain things to a customer when asked – it will be appreciated.

Read the previous section again and note down some key bullet points here:

-
-
-
-
-

Theory and technology

Electricity and the Atom

Electricity To understand electricity properly we must start by finding out what it really is. This means we must think very small! The molecule is the smallest part of matter that can be recognized as that particular matter. Sub-division of the molecule results in atoms. The atom is the smallest part of matter.

The Atom The atom consists of a central nucleus made up of protons and neutrons. Around this nucleus electrons orbit, like planets around the sun. The neutron is a very small part of the nucleus. It has an equal positive and negative charge. It is therefore neutral and has no polarity. The proton is another small part of the nucleus, and it is positively charged. Since the neutron is neutral and the proton is positively charged, the nucleus of the atom is positively charged.

The Electron The electron is an even smaller part of the atom and is negatively charged. It is held in orbit around the nucleus by the attraction of a positively charged proton. When atoms are in a balanced state, the number of electrons orbiting the nucleus equals the number of protons. The atoms of some materials have electrons that are easily detached from the parent atom and join an adjacent atom. In doing so they move an electron (like polarities repel) from this atom to a third atom and so on through the material. These are called free electrons.

Conductors and Insulators Materials are called conductors if the electrons can move easily. However, in some materials it is difficult to move the electrons. These materials are called insulators.

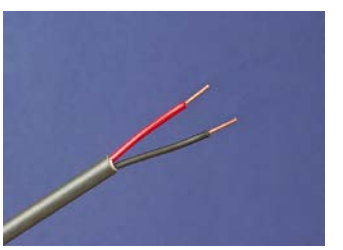

Insulated conductors

Electron Flow If an electrical pressure (voltage) is applied to a conductor, a directional movement of electrons will take place. There are two requirements for electrons to flow: a pressure source (e.g. a battery or a generator) and a complete conducting path for the electrons to move (e.g. wires).

Electric Current An electron flow is termed an electric current. Shown here is a simple electric circuit. The battery positive terminal is connected, through a switch and lamp, to the battery negative terminal. With the switch open, the chemical energy of the battery will remove electrons from the positive terminal to the negative terminal via the battery. This leaves the positive terminal with less electrons and the negative terminal with a surplus of electrons. An electrical pressure exists between the battery terminals. With the switch closed, the surplus electrons on the negative terminal will flow through the lamp back to the electron deficient positive terminal. The lamp will therefore light until the battery runs down.

Conventional Flow The movement from negative to positive is called the electron flow. However, it was once thought that current flowed from positive to negative. This convention is still followed for practical purposes. Therefore, even though it is not correct, the most important point is that we all follow the same convention. We say that current flows from positive to negative.

Effects of Current Flow When a current flows in a circuit, it can produce only three effects: heat, magnetism and chemical. The Heating Effect is the basis of electrical components such as lights and heater plugs. The Magnetic Effect is the basis of relays and motors and generators. The Chemical Effect is the basis for electro plating and battery charging. The three effects are reversible. For example, electricity can make magnetism, and magnetism can be used to make electricity.

Heating Effect

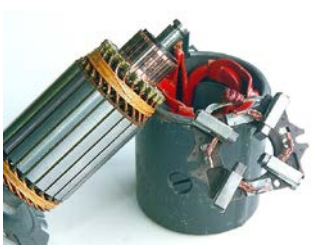
Magnetic Effect

Chemical Effect

Reversibility – motor and generator

Voltage, Current, Resistance and Power In this figure, the number of electrons through the lamp every second is the rate of flow. The cause of electron flow is the electrical pressure. The lamp produces an opposition to the rate of flow set up by the electrical pressure. Power is the rate of doing work or changing energy from one form to another. All these quantities are given names.

Ohm's Law If the voltage applied to the circuit was increased but the lamp resistance stayed the same, then current would increase. If the voltage was maintained, but the lamp was changed for one with a higher resistance, the current would decrease. This relationship is put into a law called Ohm's Law. This law states that in a closed circuit the current is proportional to the voltage and inversely proportional to the resistance. Any one value can be calculated if the other two are known.

Power Equation When voltage causes current to flow, energy is converted. This is described as power. The unit of power is the Watt. As with Ohm’s law, any one value can be calculated if the other two are known.

State the three effects of electricity.

Read the previous section again and note down some key bullet points here:

-
-
-
-
-

Basic Electrical Circuits and Magnetism

Conductors, Insulators and Semi-Conductors All metals are conductors. Silver, copper and aluminum are among the best and most frequently used. Liquids, which will conduct an electric current, are called electrolytes. Insulators are generally non-metallic and include rubber, porcelain, glass, plastic, cotton, silk, wax, paper and some liquids. Some materials can act as either insulators or conductors depending on conditions. These are called semi-conductors. They are used to make transistors and diodes.

Insulator

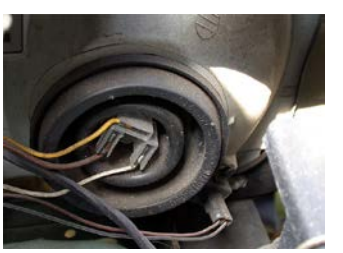
Conductor

Semi-conductor

Electrolyte

Factors Affecting Resistance of a Conductor The amount of resistance offered by a conductor is determined by a number of factors.

Length - the greater the length the greater the resistance.

Cross sectional area - the larger the area the smaller the resistance.

The material - the resistance offered by a conductor will vary according to the material from which it is made.

Temperature - most metals increase in resistance as temperature increases.

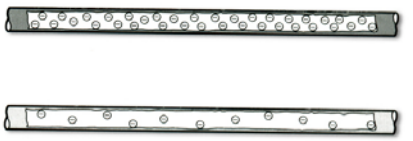

Conductor resistance

Series Circuits Resistors connected in a series create a single path through which the current flows. In a series circuit:

Current is the same in all parts of the circuit

Applied voltage equals the sum of the volt drops around the circuit

Total resistance of the circuit equals the sum of the individual resistance values.

A simple series circuit

Parallel Circuits When resistors are connected to provide more than one path for the current to flow in, and have the same voltage across each component, they are connected in parallel. In a parallel circuit:

Voltage across all components of a parallel circuit is the same.

Total current from the source is the sum of the current flowing in each branch. The current splits up depending on each component resistance.

A simple parallel circuit

Total resistance of the circuit is the sum of the reciprocal (one divided by the resistance) values.

Magnetism and Electromagnetism Magnetism can be created by a permanent magnet or by an electromagnet. The space around a magnet in which the magnetic effect can be detected is called the magnetic field. Flux lines or lines of force represent the shape of magnetic fields in diagrams. Electromagnets are used in motors, relays, and fuel injectors. Force on a current carrying conductor in a magnetic field is created because of two magnetic fields interacting. This is the basic principle of how a motor works.

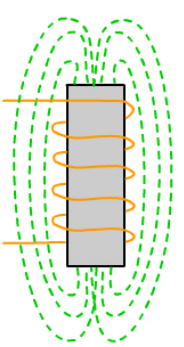

Electromagnet

Electromagnetic Induction When a conductor cuts or is cut by magnetism, a voltage is induced in the conductor. The direction of this voltage depends on the direction of the magnetic field and the direction in which the field moves relative to the conductor. The size is proportional to the rate at which the conductor cuts or is cut by the magnetism. This effect of induction, meaning that voltage is made in the wire, is the basic principle of how generators such as the alternator on a car work. A generator is a machine that converts mechanical energy into electrical energy.

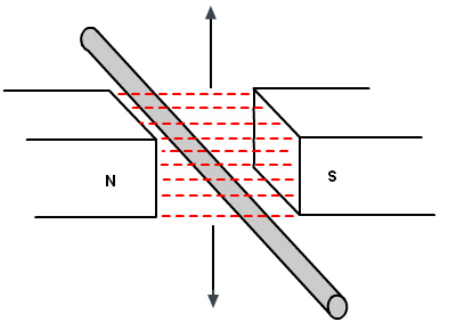

Induction

Mutual Induction If two coils, primary and secondary, are wound on to the same iron core, any change in the magnetism of one coil will induce a voltage in the other. This happens when the primary current is switched on and off. If the number of turns of wire on the secondary coil is more than the primary, a higher voltage can be produced. This is called transformer action and is the principle of the ignition coil.

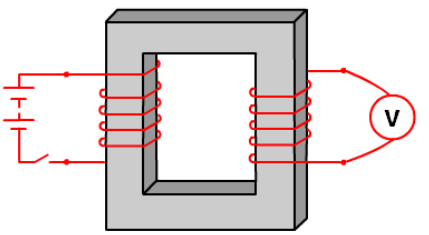

Transformer

Ignition coil

State the factors that affect the resistance of a conductor.

Read the previous section again and note down some key bullet points here:

-
-
-
-
-

Electronic Components and Circuits

Introduction This section describes the principles of various electronic components and circuits. It is not intended to explain their detailed operation. The intention is to describe briefly how the circuits work and where they may be used in vehicle applications. An understanding of basic electronic principles will help show how electronic control units work. This understanding is important when faultfinding electrical and electronic systems. These range from a simple interior light delay circuit, to the most complicated engine management systems.

Electronic systems

Basic Electronic Components Shown here are the symbols for some common electronic components. A simple and brief description follows for some of the components shown. Standards for these symbols vary from manufacturer to manufacturer, but most are similar.

Resistors Resistors are probably the most widely used component in electronic circuits. Two factors must be considered when choosing a suitable resistor: the ohms value and the power rating. Resistors are used to limit current flow and provide fixed voltage drops. Most resistors used in electronic circuits are made from small carbon rods; the size of the rod determines the resistance. A thermistor is a resistor that changes resistance with temperature.

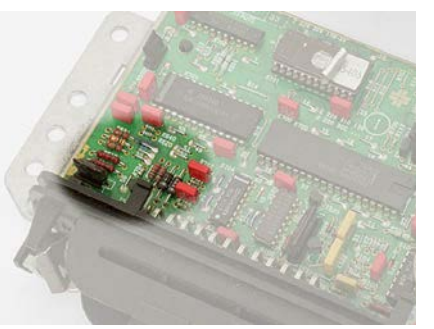

Resistors in an electronic control unit

Capacitors Capacitors consist of two plates separated by an insulator. The value of the capacitor is determined mainly by the area of the plates and the distance between them. Capacitors are often constructed from metal foil sheets insulated by paper, which are rolled up together inside a tin can. The two plates can hold a charge of electricity.

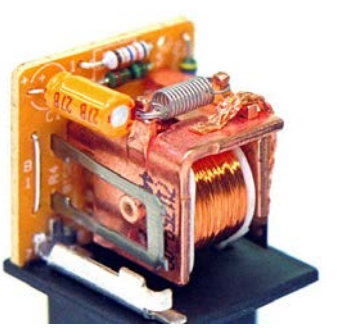

Capacitor in a flasher unit

Diodes Diodes can be described as one-way valves. The diode is made from two types of silicon (N type and P type). Electrons can flow from negative (N type) to the positive (P type) material, but not the other way. Zener diodes are very similar in operation, except that they are designed to conduct in the reverse direction at a pre-set voltage. They can be thought of as a type of pressure relief valve.

Diodes are one-way valves for electricity

Transistors Transistors are the devices that have allowed the development of today's complex and small electronic systems. The transistor is used either as a switch or as an amplifier. Transistors are constructed from the same materials as diodes but with three terminals. A small voltage (about 0.7V) supplied to the base terminal of a transistor known as an NPN, will cause it to fully switch on, joining the collector and emitter. It is sometimes useful to think of a transistor as a type of relay. However, with a transistor, a smaller voltage will partially switch the collector-emitter circuit on and hence the component works as an amplifier.

Transistor in an ignition ECU

Inductors Inductors are most often used as part of an oscillator or amplifier circuit. In these applications, it is essential for the inductor to be stable and of reasonable size. The basic construction of an inductor is a coil of wire wound on a former. It is the magnetic effect of the changes in current flow that give this device the properties of inductance. The inductor is also used as a filter because it tends to prevent changes in signals.

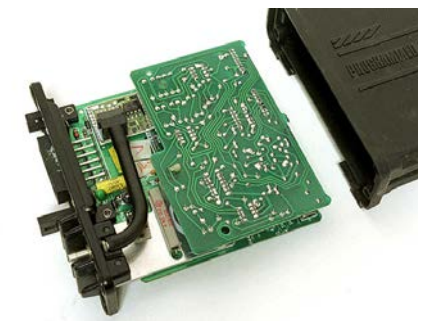
Electronic control unit

Integrated Circuits Integrated circuits or ICs are constructed on a single slice of silicon. Combinations of some of the components mentioned previously can be combined to carry out various tasks. These tasks can range from a simple switching action to the operation of a microprocessor of a computer. The components required for these circuits can be made directly on to one slice of silicon. The advantages of this are not only the size of the ICs (which can be very small) but the speed at which they can be made to work.

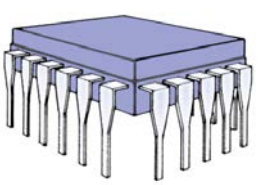
IC Package[1]

Amplifiers The simplest form of amplifier involves just one resistor and one transistor, as shown here. A small change on the input terminal will cause a similar change of current through the transistor, and an amplified signal will be seen at the output terminal. However, the output will be inverted compared to the input. This very simple circuit has many applications when used as a switch. For example, a very small current flowing to the input can be used to operate a relay winding connected in place of the resistor.

ICE systems contain complex amplifiers

Basic transistor amplifier

Practical Amplifier One of the main problems with the previous transistor amplifier is that the gain can be variable and non-linear. To overcome this, some type of feedback is used to make a circuit with more appropriate characteristics. In the circuit shown here, resistors R_{b1} and R_{b2} set the base voltage of the transistor, and because the base emitter voltage is constant at about 0.7 V, this in turn will set the emitter voltage. The standing current through R_c and R_e is therefore defined, and the small signal changes at the input will be reflected in an amplified form at the output.

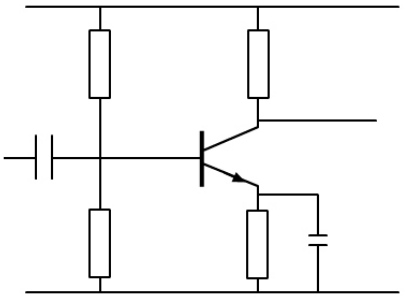

Amplifier circuit

Integrated Circuit Amplifiers Integrated circuit differential amplifiers are very common. One of the most common is known as the '741 op-amp'. This type of amplifier has a gain in the region of 10,000. Operational amplifiers are used in many applications, and in particular can be used as signal amplifiers. A major role for this device is to act as a buffer between a sensor and a load such as a display. The internal circuit of these types of device can be very complicated, but external connections and components can be kept to a minimum.

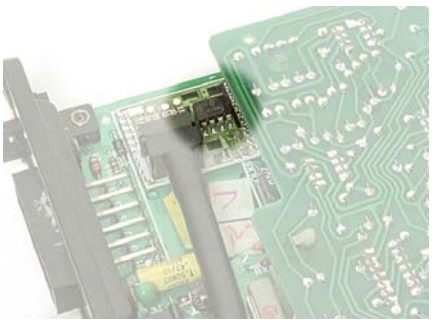

Operational amplifier on a chip

Bridge Circuits There are many types of bridge circuits but they are all based on the principle of the Wheatstone bridge. A simple calculation will show that the meter will read zero when each side of the bridge is balanced. A bridge and amplifier circuit, which may be typical of a motor vehicle application, is shown here. In this circuit, R_1 could be a hot wire airflow sensor or a temperature measurement thermistor. The output of the bridge changes, even with small changes in the resistance of R_1.

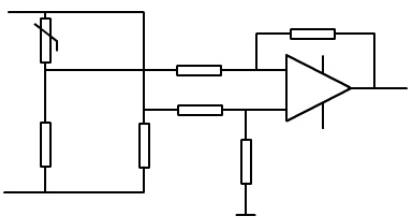

Bridge circuit and amplifier

Schmitt Trigger The Schmitt trigger is used to change variable signals into crisp square wave signals for use in digital or switching circuits. For example, a sine wave fed into a Schmitt trigger will emerge as a square wave with the same frequency as the input signal. The output signal from an inductive type distributor or a crank position sensor on a motor vehicle will be passed through a Schmitt trigger. This will ensure that further processing is easier and the switching action is positive.

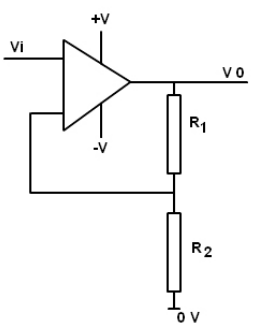

This circuit converts a sine wave to a square wave

Timers In its simplest form, a timer consists of just two components: a resistor and a capacitor. When the capacitor is connected to a supply, via the resistor, it is understood that it will become fully charged in 5CR seconds. Where R is the resistor value in Ohms and C is the capacitor value in Farads. The discharge time is the same if the resistor is connected across the capacitor. Timer circuits similar to this are used in wiper delay units and flasher units.

Flasher unit

Basic timer circuit

Filters A filter that prevents large particles of contaminates reaching a fuel injector is an easy concept to grasp. In electronic circuits, the basic idea is the same except the 'particle size' is the frequency of a signal. Electronic filters come in two main types: low pass filters, which block high frequencies, and high pass filters, which block low frequencies. The two components of a basic filter work together as a voltage divider, just like two resistors connected to a battery. However, the 'resistance' of the capacitor changes depending on the signal frequency. Filters are often used to block interference signals.

Fuel filter

Filter circuits

Darlington Pair A Darlington pair is a simple combination of two transistors, which will give a high current gain - typically several thousand. The transistors are usually mounted on a heat sink, and overall the device will have three terminals marked as a single transistor - base, collector and emitter. The Darlington pair configuration is used for many switching applications. A common use is for the switching of coil primary current in the ignition circuit.

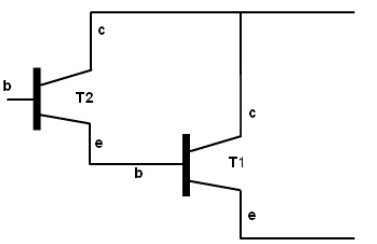

Two transistors as a Darlington pair

Digital to Analog Conversion (DAC) Conversion from digital signals to an analog signal is a relatively simple process. When an operational amplifier is configured with shunt feedback, the input and feedback resistors determine the gain (amplification). The 'weighting' of each input line can be determined by choosing suitable resistor values. In the case of the four-bit digital signal as shown, the most significant bit will be amplified with a gain of one. The next bit ½, the next bit a ¼, and in this case, the least significant bit will be amplified with a gain of $^{1}/_{8}$. The output signal produced is therefore a voltage proportional to the value of the digital input number.

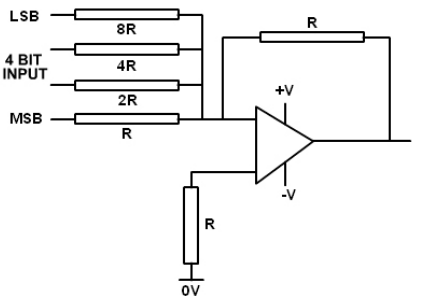

DAC operation

Analog to Digital Conversion (ADC) The purpose of this circuit is to convert an analog signal, such as that received from a temperature thermistor, into a digital signal for use by a computer or a logic system. Most systems work by comparing the output of a digital to analog converter (DAC) with the input voltage. The output of a binary counter is connected to the input of the DAC, the output of which will be an increasing voltage. This voltage is compared with the input voltage and the counter is stopped when the two are equal. The count value is then a digital representation of the input voltage. The operation of the other digital components in this circuit will be explained in the next section.

ADC

State two factors, which must be considered when choosing a suitable resistor.

Explain where and why ADCs and DACs are used.

Read the previous section again and note down some key bullet points here:

-
-
-
-

Vehicle Electrical Components and Circuits

Switches A switch is a simple device used to break a circuit. It prevents the flow of current. A wide range of switches is used. Some switches are simple on/off devices such as an interior light switch on the door pillar. Other types of switch are more complex. They can contain several sets of contacts to the indicators, headlights and horn. These are described as multi-function switches.

Multifunction switch

Resistors Good conductors are used to carry the current with minimum voltage loss due to the conductor resistance. Resistors are used to control the current flow in a circuit or to set voltage levels. They are made of materials that have a high resistance. Resistors to carry low currents are often made of carbon. Resistors for high currents are usually wire wound.

Resistor symbol

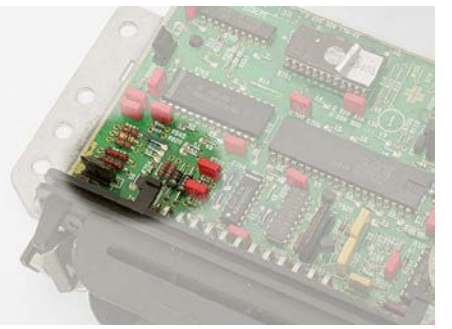

Resistors in use

Relays A relay is a very simple device. It can be thought of as a remote controlled switch. A very small electric current is used to magnetize a small winding. The magnetism then causes some contacts to close, which in turn can control a much heavier current. This allows small delicate switches to be used to control large current users, such as the headlights or the heated rear window.

Simple 'cube' relay

Capacitors A capacitor is a device for storing an electric charge. In its simple form, it consists of two plates separated by an insulating material. One plate can have excess electrons compared to the other. On vehicles, its main uses are for reducing arcing across contacts and for radio interference suppression circuits. Capacitors are also used in electronic control units.

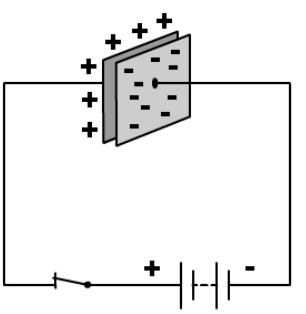

Capacitor operation

Fuses Some form of circuit protection is required to protect the electrical wiring of a vehicle and to protect the electrical and electronic components. It is now common practice to protect all electrical circuits with a fuse. A fuse is the weak link in a circuit. If an overload of current occurs, then the fuse will melt and disconnect the circuit before any serious damage is caused. Automobile fuses are available in three types: glass cartridge, ceramic and blade type. The blade type is the most popular choice due to its simple construction and reliability. Fuses are available in a number of rated values. Only the fuse recommended by the manufacturer should be used.

Purpose of a Fuse A fuse is used to protect the device as well as the wiring. A good example of this is a fuse in a wiper motor circuit. If a high value fuse were used it would still protect against a severe short circuit. However, if the wiper blades froze to the screen, a large value fuse might not protect the motor from over heating.

Fusible Links Fusible links in the main output feeds from the battery protect against major short circuits in the event of an accident or error in wiring connections. These links are simple heavy-duty fuses and are rated in values such as 50, 100 or 150A.

These links connect to the battery

Circuit Breakers Occasionally, circuit breakers are used in place of fuses. This is more common on heavy vehicles. A circuit breaker has the same rating and function as a fuse but with the advantage that it can be reset.

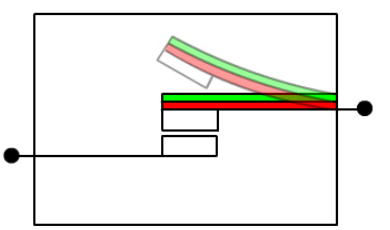

A bimetal strip is the main component

Terminals and Connectors Many types of terminals are available. These have developed from early bullet type connectors into high quality waterproof systems now in use. A popular choice for many years was the spade terminal. This is still a standard choice for connection to relays, but is now losing ground to the smaller blade terminals. Circular multi-pin connectors are used in many cases; the pins varying in size from 1mm to 5mm. With any type of multi-pin connector an offset slot or similar is used to prevent incorrect connection.

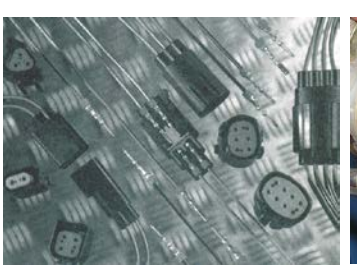

Selection of terminals and connectors

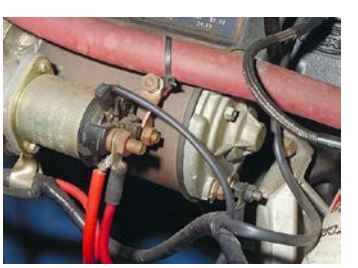

Terminals and connectors in use

Protection Protection against corrosion of the connector is provided in a number of ways. Earlier methods included applying suitable grease to the pins to repel water. It is now more common to use rubber seals to protect the terminals, although a small amount of contact lubricant can still be used. Many multi-connectors use a latch to prevent the individual pins from working loose. It also ensures that the complete plug and socket is held securely.

Waterproof connector block

Wires Cables or wires used for motor vehicle applications are usually copper strands insulated with PVC. Copper, beside its very low resistance, has ideal properties such as ductility and malleability. This makes it the natural choice for most electrical conductors. For the insulation, PVC is ideal. It not only has very high resistance, but also is very resistant to fuel, oil, water and other contaminants.

Cables in a wiring harness

Cable Size The choice of cable size depends on the current it will have to carry. The larger the cable, the better it will be to carry the current and supply all of the available voltage. However, it must not be too large or the wiring becomes cumbersome and heavy. In general, the voltage supply to a component must not be less than 90% of the system supply. Cable is available in stock sizes, but a good 'rule of thumb' guide is that one strand of 0.3mm diameter wire will carry 0.5 amps safely.

Heavy duty cable

Light duty cable

UK Color Code The UK system uses twelve colors to determine the main purpose of the cable. Tracer colors further define its use. The main colors used and some other examples are given in the table.

(useful tables at end)

General and European System A system used by Ford, VAG, BMW and other manufacturers is based *broadly* on the following table. Please note that there is no connection between the 'Euro' system and the British standard color codes. In particular, note the use of the color brown in each system!

Terminal Numbers A popular system is the terminal designation. This helps to ensure correct connections are made on the vehicle, particularly in after sales repairs. It is important to note, however, that the designations are not to identify individual wires but are to define the terminals of a device. Listed here are some of the popular numbers.

Symbols and Circuit Diagrams
The selection of symbols shown here is intended as a guide to some of those in use. Many manufacturers use their own variation. The idea of a symbol is to represent a component in a very simple but easily recognizable form.

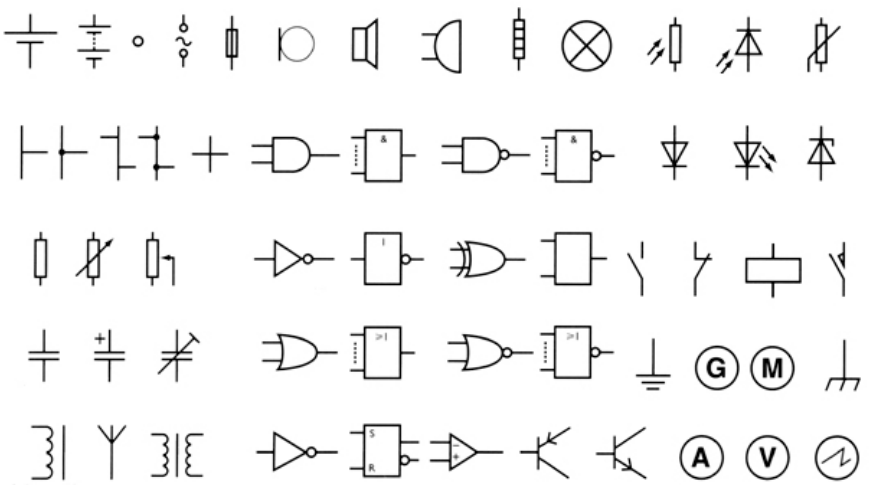

Circuit symbols

Conventional Circuit Diagram The conventional type of diagram shows the electrical connections of a circuit but does not attempt to show the various parts in any particular order or position.

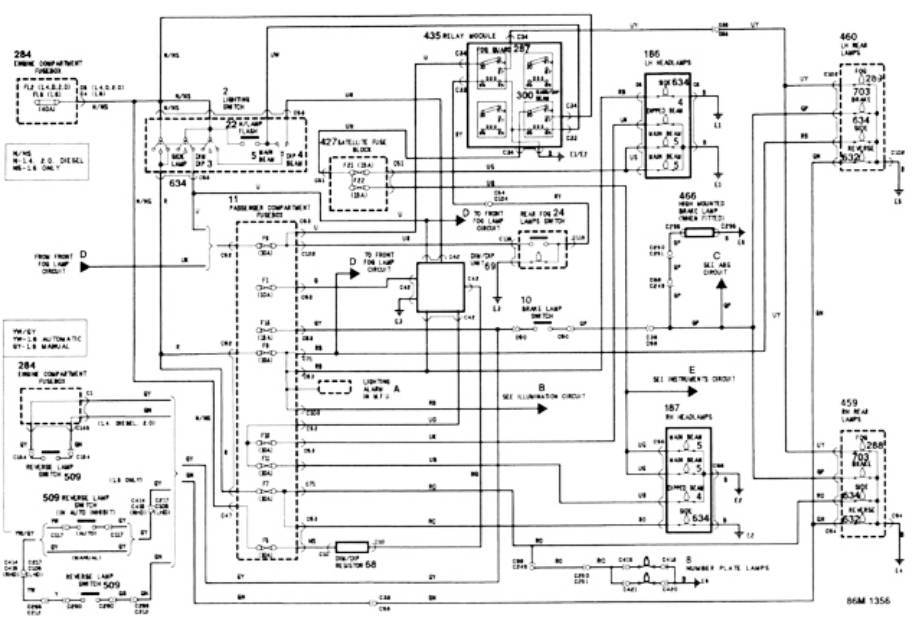

Conventional Diagram

Layout Circuit Diagram A layout circuit diagram attempts to show the main electrical components in a position similar to those on the actual vehicle. Due to the complex circuits and the number of individual wires, some manufacturers now use two diagrams. One shows electrical connections, and the other shows the actual layout of the wiring harness and components.

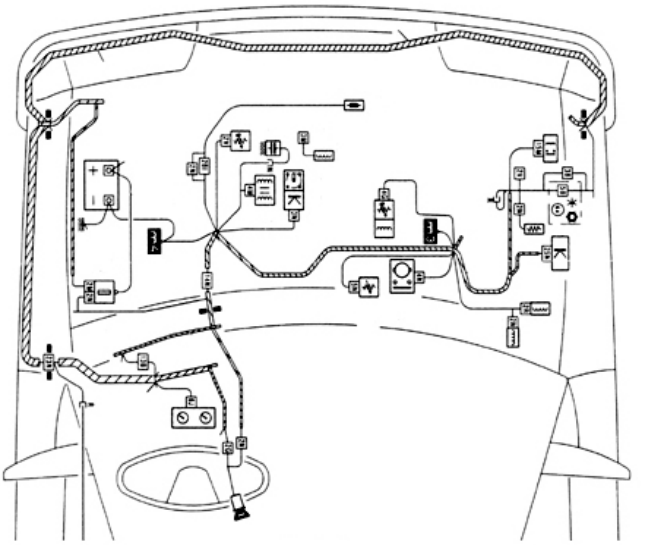

Layout Diagram

Terminal Circuit Diagram A terminal diagram shows only the connections of the devices and not any of the wiring. The terminal of each device, which can be represented pictorially, is marked with a code. This code indicates the device terminal designation, the destination device code and its terminal designation, and in some cases the wire color code.

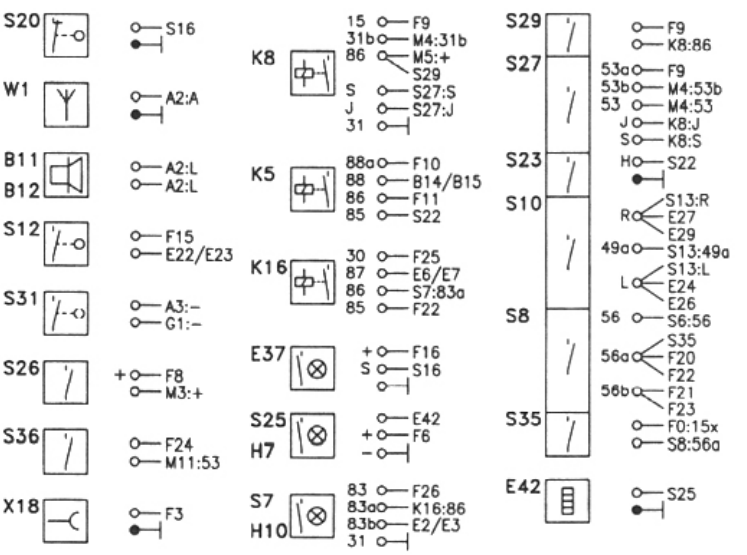

Terminal Diagram

Current Flow Circuit Diagram This diagram is laid out to indicate current flow from the top of the page to the bottom. These diagrams often have two supply lines at the top of the page marked 30 (main battery positive supply) and 15 (ignition controlled supply). At the bottom of the diagram is a line marked 31 (ground or chassis connection).

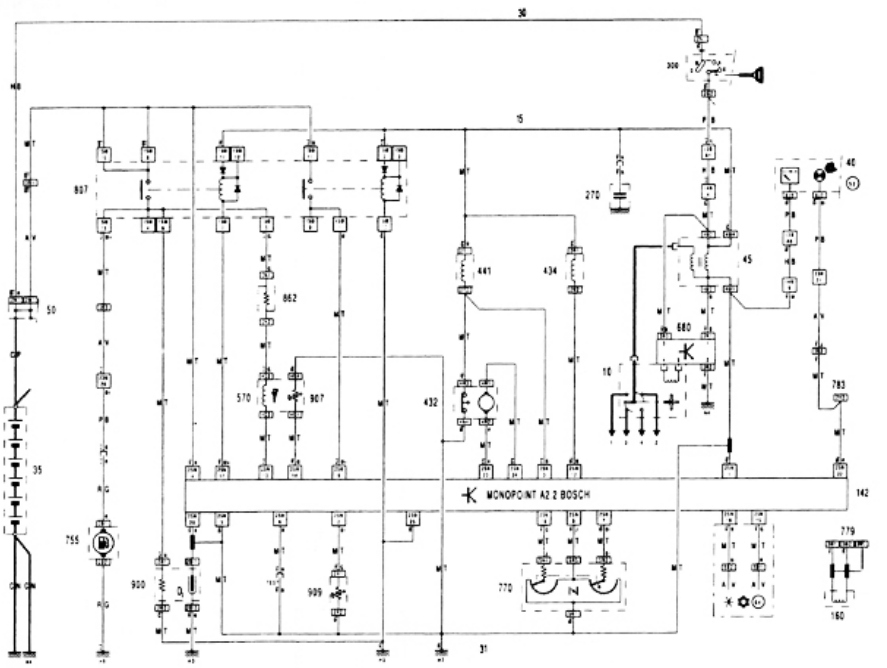

Current Flow Diagram

Lighting Circuit Shown here is a basic lighting circuit. Click on each switch to make the circuit operate. Notice the effect of some switches being connected in series.

Describing Electrical Circuit Faults Three descriptive terms are useful when discussing electrical circuits:

Open circuit - the circuit is broken and no current can flow.

Short circuit - a fault has caused a wire to touch another conductor and the current uses this as an easier way to complete the circuit.

High resistance - a part of the circuit has developed a high resistance (such as a dirty connection), which will reduce the amount of current that can flow.

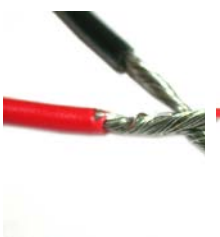

Short circuit

Open circuit

Limits of the Wiring Systems The complexity of modern wiring systems has increased steadily. However, in recent years it has increased dramatically. The size and weight of the wiring harness is a major problem. The number of separate wires required on some vehicles can be in the region of twelve hundred. The wiring loom required to control all functions in or from the drivers door can require up to fifty wires. This is clearly becoming a problem because the number of connections and number of wires increases the possibility of faults developing.

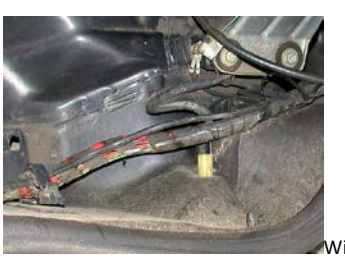

Wiring harness

Multiplexing If data could be transmitted along one wire and made available to all parts of the vehicle, then the vehicle wiring could be reduced to just three wires. These wires would be a main supply, a ground connection, and a signal wire. Various signals can be 'multiplexed' on to one wire in two main ways. These are by frequency division and time division multiplexing. Frequency division is similar to the way radio signals are transmitted. Time division multiplexing is generally used for transmission of digital signals. In this case, a time slot is allocated for 'codes' to be sent.

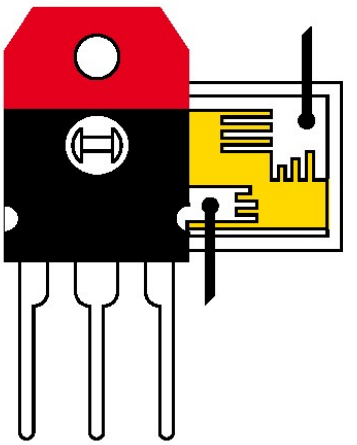

Multiplex ...[4]

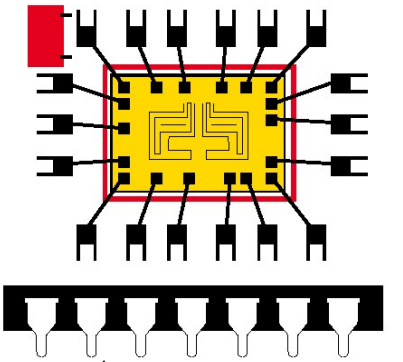

...components[4]

Multiplexed Wiring The data bus and the power supply cables must 'visit' all areas of the vehicle electrical system. To illustrate the operation of this system, consider the events involved in switching the turning signals on and off. First, in response to the driver pressing the light switch, a unique signal is placed on the data bus. This signal is only recognized by special receivers built as part of each light unit assembly. These in turn will make a connection between the power ring main and the lights. The events are similar to turn off the lights except that the code placed on the data bus will be different and will be recognized only by the appropriate receivers as an off code.

Controller Area Networks (CAN) Bosch has developed a protocol known as 'CAN' or controller area network. This system meets practically all requirements with a very small chip surface (easy to manufacture and cheaper). CAN is suitable for transmitting data in the area of driveline components, chassis components and mobile communications. It is a compact system, which will make it practical for use in many areas. Two variations on the physical layer are available, which suit different transmission rates. One variation is for data transmission between 100k and 1M bits per second. It is used for rapid control devices. The other variation transmits data between 10k and 100k bits per second. It is used for switching and control operations.

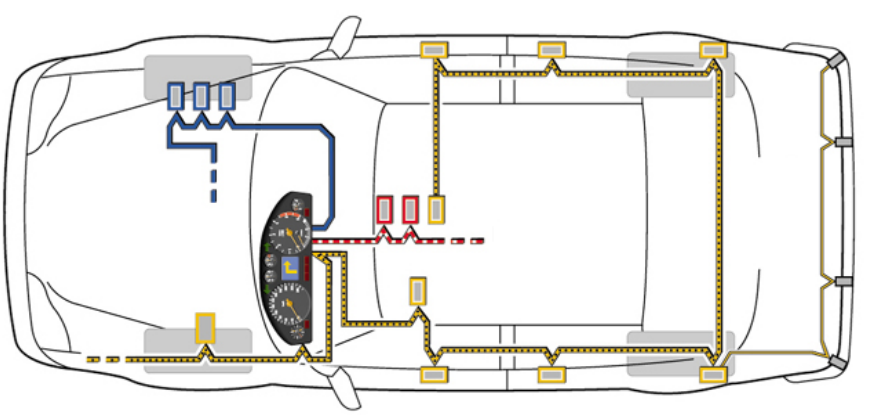

CAN system for instrumentation[4]

Describe what is meant by an open circuit and a short circuit.

Read the previous section again and note down some key bullet points here:

-
-
-
-
-

Digital Systems

Introduction With most electronic systems on the car, we don't have to worry about what the electronics do in detail. It is good practice to think of electronic systems as having inputs and outputs. The 'brain' of the system will be the electronic control unit or ECU. Shown here, as an example, is an anti-lock brake system. The inputs supply information to the ECU about how the car is operating. The ECU 'decides' what to do and then controls the outputs of the system, which in this case are the brakes.

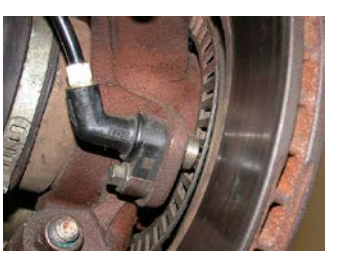
Wheel sensors

ECU

Modulator

ABS in action[2]

Digital Electronic Systems When working on a system of this type, if it is not working correctly, we can consider just one part at a time until the fault is found. This type of work is very interesting, but you will need to understand the operation of all the basic principles first. It is not necessary to understand the operation of ECUs in detail, but a basic knowledge of how they work is essential. The basic building blocks of digital systems are known as logic gates.

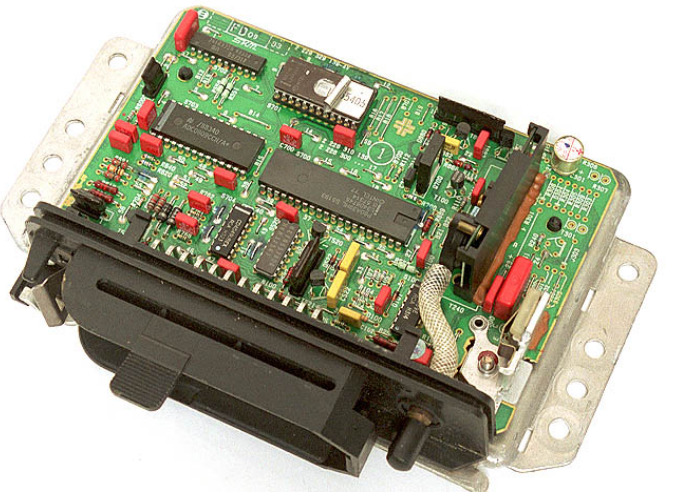

Electronic control unit

Logic Gates A truth table is used to describe what combination of inputs will produce a particular output. The AND gate will only produce an output of '1' if both (or all, as it can have more than two inputs), are also at logic '1'. Output is '1' when inputs A AND B are '1'. The OR gate will produce an output when either A OR B (OR both), are '1'. Again more than two inputs can be used. A NOT gate is a very simple device where the output will always be the opposite logic state from the input. In this case, A is NOT B. The AND and OR gates can each be combined with the NOT gate to produce the NAND and NOR gates respectively. These two gates have been found to be the most versatile and are used extensively for construction of more complicated logic circuits.

The symbols and truth tables for the basic logic gates

Gate Operation Logic gates are made from simple electronic components such as resistors and transistors. The circuit shown here is a simplified NOT gate. This gate simply inverts the input.

Combinational Logic Circuits consisting of many logic gates are called combinational logic circuits. They have no memory or counter circuits. These circuits can be represented by a simple block diagram with inputs and outputs. The first step in the design process of creating a combinational logic circuit is to define the required relationship between the inputs and outputs. Let's assume we need a circuit to compare two sets of three inputs, and if they are not the same, to provide a single logic '1' output. This could be used to compare the actions of a system with twin safety circuits, such as an ABS electronic control unit. The logic circuit could be used to operate a warning light if a discrepancy exists between the two safety circuits. Shown here is one way in which the circuit could be constructed.

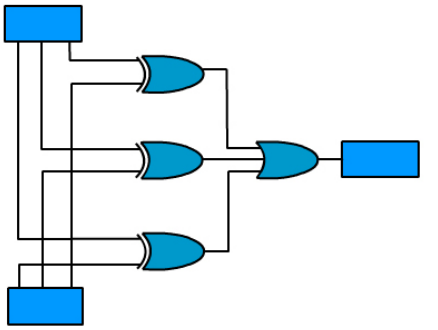

Safety circuits compare inputs

Sequential Logic The combinational logic circuit discussed previously was a combination of various gates. The output of each system was only determined by the present inputs. Circuits, which have the ability to memorize previous inputs or logic states, are known as sequential logic circuits. In these circuits, the sequence of past inputs determines the current output. Sequential circuits store information after the inputs are removed; they are the basic building blocks of computer memories.

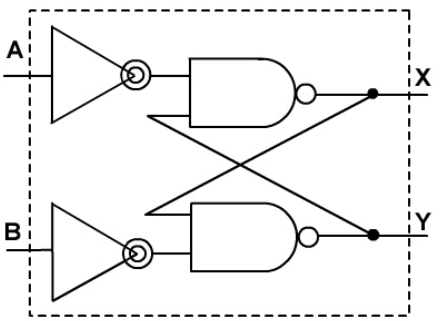

Basic memory building block made from gates

Counters Counters are constructed from a series of bistable (two steady states) devices. Bistables are often called flip-flops! A binary counter will count clock pulses at its input. These counters are called 'ripple through' or non-synchronous, because the change of state ripples through from the least significant bit, and the outputs do not change simultaneously. The counters can be configured to count up or down.

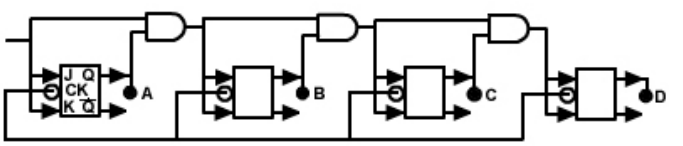

Binary counter

Memory Circuits Electronic circuits using flip-flops, as described previously, are a form of memory. If eight flip-flops are connected together, they form a simple eight-bit word memory. This is usually called a register, rather than memory, but it will store one byte (eight bits) of information. When more than one register is used, an address is required to access or store the data in a particular register. Shown here is a block diagram of a four-byte memory. Each area of the memory is allocated a unique address. A control bus is also needed to determine if the memory is to be read from or written to.

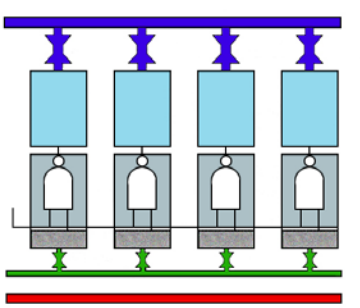

Four-byte memory

RAM The memory, which has just been described along with the techniques used to access the data, is typical of most computer systems. This type of memory is known as random access memory (RAM). Data can be written to and read from this type of memory, but note that the memory is volatile. In other words, it will 'forget' all its information when the power is switched off!

Random access memory chips

ROM Another type of memory that can be 'read from' but not 'written to' is known as read only memory (ROM). This type of memory has data permanently stored and is not lost when power is switched off. There are many types of ROM, but one in particular is worth mentioning. That is EPROM. This stands for erasable, programmable, read only memory. Its data can be changed with special equipment (some are erased with ultraviolet light), but for all other purposes its memory is permanent. In an engine management ECU, operating data and a controlling program are stored in ROM, whereas instantaneous data (engine speed, load, temperature etc.) are stored in RAM.

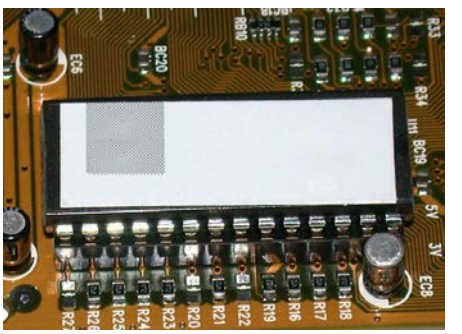

Read only memory chip

Micro-processor The use of the microprocessor has made it possible for tremendous advances in all areas of electronic control. Designers have found that the control of vehicle systems, which is now required to meet the customer's needs and the demands of regulations, has made it necessary to use computer control. Shown here is a block diagram of a microcomputer containing the four major parts. These are the input and output ports, some form of memory, and the CPU or central processing unit (microprocessor). It is likely that some systems will incorporate more memory chips and other specialized components. Three buses carry data, addresses and control signals.

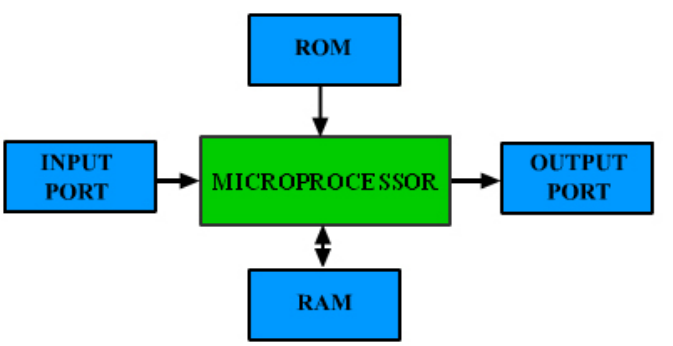

Modern microprocessor system

Micro-processor Operation A microprocessor is operated at very high speed by the system clock. The microprocessor has a 'simple' task. It has to fetch an instruction from memory, decode the instruction and then carry out or execute the instruction. This cycle, which is carried out relentlessly, even if the instruction is to do nothing, is known as the fetch-decode-execute sequence.

Microprocessor (microcontroller in this case)

Fetch-Decode-Execute Sequence The full sequence of events is represented here. The execute phase can be as simple as adding two numbers inside the microprocessor or it may require data to be output to a port. If this is the case then the address of the port will be placed on the address bus and a control bus 'write' signal generated.

The microprocessor places the address of the next memory location on the address bus.

At the same time, a memory read signal is placed on the control bus.

The data from the addressed memory location is placed on the data bus.

The data from the data bus is temporarily stored in the microprocessor.

The instruction is decoded in the microprocessor internal logic circuits.

The 'execute' phase is now carried out.

Memory The way in which memory actually works was discussed previously. We will now look at how it is used in a microprocessor controlled system. Memory is the part of the system that stores both the instructions for the microprocessor (the program) and any data that the microprocessor will need to execute the instructions. It is convenient to think of memory as a series of pigeonholes, which are each able to store data. Each of the pigeonholes must have an address to distinguish them from each other and so that the microprocessor will 'know', where a particular piece of information is stored. The microprocessor reads the program instructions from sequential memory addresses and then carries out the required actions in turn.

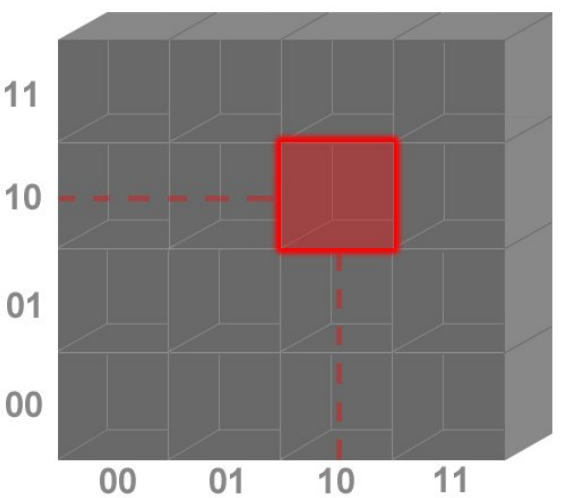

The address of the Memory location shown is 1010

Summary A complex digital electronic system reacts to inputs and controls outputs. To do this, complex operations are necessary. However, simply knowing that the unit is following a set of instructions (a program) is a good start. These instructions can all be broken down into simple yes/no operations. This is a good way to comprehend a complicated system. Modern computers (in a car or on a desk) contain millions and millions of logic gates! A simulation program is available from the web site shown: www.automotive-technology.co.uk

Describe the difference between ROM and RAM.

Read the previous section again and note down some key bullet points here:

-
-
-
-
-

Introduction and Battery Construction

Introduction Modern vehicles use quite a bit of electrical power. The engines require a large current in order to start and many other systems are now electrically powered. Most small vehicles use a 12-volt system but it is likely that, in the future, 42-volt systems will become standard. This will be necessary to provide sufficient power for the ever-increasing range of electrical and electronic accessories.

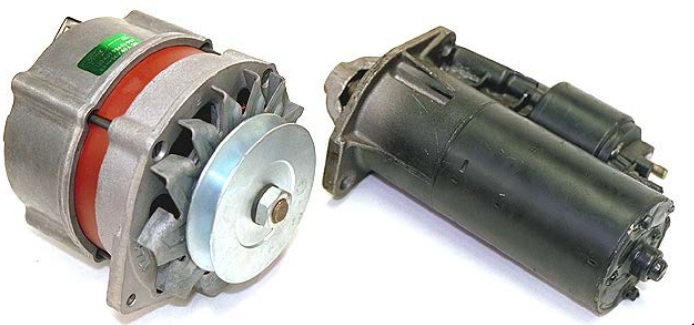

A lternator and starter

Microprocessors Many components that once were mechanically operated are now driven by small electric motors and controlled by microprocessors. Total vehicle control, through sensors, electronic control units and actuators, may be common on vehicles sometime in the future.

Window switches

Battery and Charging System Function The main function of the battery and charging system is to provide a source of electrical power for all of the electrical systems on the vehicle. It must be capable of providing electrical power under all operating conditions.

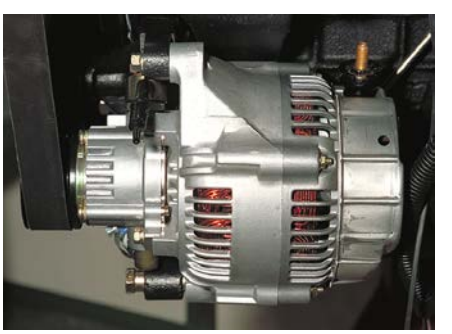

Charging system

Starting System Function The main function of the starting system is to crank the engine at sufficient speed to begin the internal combustion process. This will then allow the engine to run, and to be fully controlled by the vehicle driver.

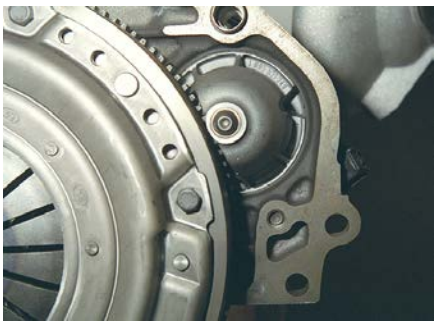

Starter system

Lead-Acid Batteries The majority of vehicle batteries are of conventional design, using lead plates in a dilute sulfuric acid electrolyte. This feature leads to the common description of "lead-acid" batteries. The output from a lead-acid battery is direct current (DC).

Vehicle battery

Battery Chemistry A rechargeable battery is an electro-chemical unit that converts an electrical current into a modified chemical compound. This chemical reaction can be reversed to release an electrical current. The modified chemical compound in the battery stores energy, which is available as electricity when connected to a circuit.

Routine Maintenance Some batteries have open cells that require routine maintenance to the electrolyte level. This usually consists of topping off with distilled water at regular intervals. Most modern lead-acid battery designs have improved plate construction and case design. This, together with precise alternator charge control, allows low- maintenance and maintenance-free types to be used.

Open cell battery – with removable caps

Battery Construction A 12-V automobile battery is made up of six cells. Each lead-acid cell has a nominal voltage of 2.1 V, which gives a value of 12.6 V for a fully charged battery under no-load conditions. The six cells are connected in series, internally in the battery, with lead bars. The cells are formed in the battery case and are completely separate from each other.

Battery Cells Each cell has a set of interleaved positive and negative plates kept apart by porous separators. The separators prevent contact of the plates, which would give an internal short circuit and affect the chemical reaction in the battery cell. The cell plates are supported above the bottom of the case. This leaves a sediment trap below the plates so that any loose material that falls to the bottom does not cause a short circuit between the plates.

Plate Construction The cell plates are formed in a lattice grid of lead-antimony or lead-calcium alloy. The grid carries the active material and acts as the electrical conductor. The active materials are lead peroxide for the positive plate and spongy lead for the negative plate.

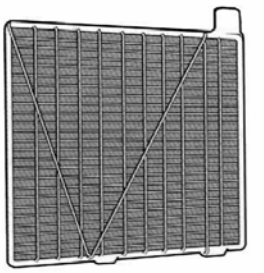

Cell plate construction

Charged Battery When a battery is in a charged state the positive plates of lead peroxide (PbO_2) are reddish brown in color, and the negative plates of spongy lead (Pb) are gray in color.

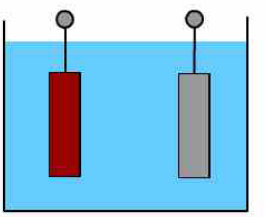

Charged state

Discharged Battery When the battery is discharging, a chemical reaction with the electrolyte changes both plates to lead sulfate ($PbSO_4$).

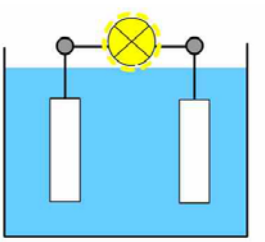

Discharged state

Reversible Chemical Reaction Applying an electrical current to the battery reverses the process. The charged battery stores chemical energy. This can be released as electrical energy when the battery is connected into a circuit.

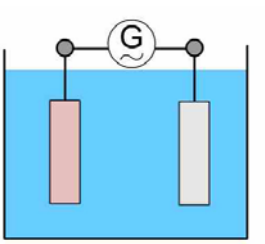

Chemical changes reverse when current is applied

Electrolyte The electrolyte is dilute sulfuric acid, which reacts with the cell plate material during charging and discharging of the battery. Sulfuric acid (H_2SO_4) consists of hydrogen, sulfur and oxygen. These chemicals separate during the charge and discharge process and attach to the cell plate active material or return to the electrolyte.

Discharging During discharge, the sulfate (SO_4) combines with the lead to form lead sulfate ($PbSO_4$). The oxygen in the positive plate is released to the electrolyte and combines with the remaining hydrogen to form water (H_2O).

Charging During charging, the reverse process occurs with the sulfate (SO_4), leaving the cell plates to reform with the hydrogen in the electrolyte to produce sulfuric acid (H_2SO_4). Oxygen in the electrolyte is released to reform with the positive cell plate material as lead peroxide (PbO_2).

Gassing Near the fully charged state some hydrogen (H) and oxygen (O) are lost as gas from the battery vent. During hot weather, some water (H_2O) can also be lost through vaporization. On older batteries, this meant that the battery electrolyte needed to be inspected regularly and water added.

Discharge of hydrogen and oxygen

Topping off the Battery Only water is lost from the battery and therefore only water should be added. Any contaminants will affect the chemical reactions in the battery and, therefore, the performance. Only distilled or specially produced water should be used. Tap water is not suitable for adding to a battery. Acid should never be used, as this will strengthen the acid solution and alter the chemical reactions.

Water (H_2O) is lost as H and O_2 – only top up with distilled water

State the chemical make up of a fully charged AND a fully discharged lead-acid battery.

Read the previous section again and note down some key bullet points here:

-
-
-
-

Battery Capacity and State of Charge

State of Charge The state of charge of a battery can be checked by measuring the strength of the electrolyte. The off-load voltage can also be used. The condition of a battery is measured by its ability to provide a high electrical current for a short time (10 seconds), without the voltage falling below a reasonable level.

Voltmeter

Electrolyte The electrolyte chemical composition changes with the state of charge. It is possible to measure this change using a hydrometer. Sulfuric acid is denser and provides greater buoyancy than water. These properties are called ”specific gravity” or ”relative density,” and water, which is used as the base for measurement of all liquids, is given a value of 1 for hydrometer readings at 15°C (60°F).

Hydrometer readings

Relative Density Readings The dilute sulfuric acid of the electrolyte of a fully charged battery cell has a reading of 1.280. The reading for a half charged battery cell is 1.200 and for a fully discharged battery is 1.150. A reading below 1.140 may indicate a cell that can no longer be recharged. It is common to write these values with three decimal places, though often just the significant digits are mentioned.

Fully charged…

Half charged…

Discharged

Hydrometer A hydrometer consists of a calibrated float in a glass cylinder. A bulb on the top of the cylinder is depressed so that it acts as a vacuum pump when it is released. A small rubber tube is attached to the bottom of the cylinder and is inserted into the electrolyte in the battery cell. A sample of the electrolyte can, therefore, be drawn into the cylinder.

Construction of a hydrometer

Hydrometer Operation The sample of electrolyte in the hydrometer lifts the float in proportion to the buoyancy of the liquid. The higher it floats the greater its "relative density." Calibrated marks on the float align with the top of the liquid to give the actual reading. This is compared with standard data and all cells are compared with each other to check the general condition of the battery. There should be very little difference between cells.

Battery voltages…

Fully charged…

Half charged…

Discharged

Discharge Testing Measurement of battery condition by heavy-duty discharge should only be carried out on a fully charged battery. It is also important to blow gently across the top of the battery to remove any explosive hydrogen gas. Heavy duty discharge is carried out with a specialist piece of equipment. The test consists of connecting a resistor in circuit with the battery for about ten seconds and measuring the voltage drop. This test applies a load similar to that of the starter circuit. Generally, the voltage should not fall below 10 V.

Heavy duty discharge test on the vehicle…

…On the bench

Battery Capacity Battery "capacity" is a measure of the rate at which a battery (at a constant temperature of 25°C) can be discharged before its voltage falls to 1.8 V. The usual measure is for constant amperage over a 10 hour period, which is known as the 10-hour rate. In some instances, a 20-hour rate is used. A battery that can discharge at 4 A over 10 hours, or 2 A, over 20 hours, is said to have a "capacity" of 40 ampere hours (Ah).

Plates and Surface Area The capacity of a battery is proportional to the number of cell plates and their surface area. Larger plate areas and increased numbers of plates are used to give greater ampere-hour rates.

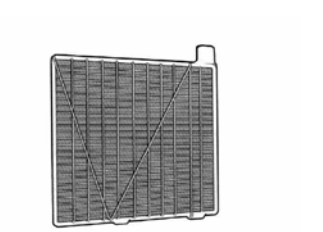
Cell plates

Ampere Hour Capacity Battery performance is related to the amp/hour rate, but is also affected by the ambient temperature. A cold battery will have a poor performance in comparison to a warm battery.

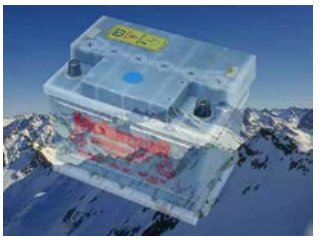
A cold battery!

A hot battery!

Reserve Capacity A more useful measure of battery performance is the "reserve capacity" rating. This refers to the time taken in minutes for a battery to discharge to a cell voltage of 1.75 V - when supplying a constant current of 25 amps. This test reflects a typical current draw for a vehicle that would be needed if the charging system failed during night driving. The reserve capacity for a 40 Ah battery will be approximately 60 minutes.

Cold Cranking Amps Another measure is the "cold cranking amps" rating, which is a measure of the maximum current that can be supplied for a period of 30 seconds before the battery voltage falls below 7.2 V. This test is carried out at minus 18°C so that it represents the most severe conditions of cold engine starting. The "cold-cranking amps" (CCA) rating of a battery is an important measure in regions that experience very cold winter temperatures.

State the chemical make up of a fully charged AND a fully discharged lead-acid battery.

State the voltage readings of a discharged, half charged and fully charged battery cell.

Battery Types and Charging

Modern Batteries Many modern batteries use a modified plate design that has a centralized plate lug and radial grid construction. To reduce gassing, the grid material is a lead-calcium alloy with a small portion of antimony. This plate design gives improved electrical current flow and is lighter than the earlier design. This means that lighter weight batteries are now available with the same performance as older types.

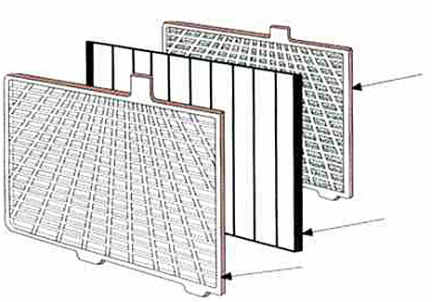
Modern cell plate design

Low Maintenance These batteries are low maintenance or maintenance-free types. When used with an alternator with accurate charge control, they require maintenance either at yearly intervals or never!

Low maintenance battery

Maintenance- Free Batteries Maintenance-free batteries are completely sealed or have only a very small vent. The maintenance-free battery does not lose water from the electrolyte in the same way as conventional lead-acid batteries do. A number of changes in the chemical composition of the plates and in the construction of the battery case reduce gassing to almost zero. Liquid, gas and vapor are also captured and returned to the battery cells.

Sealed maintenance free battery

Plate Grids The plate grids are of radial design, made from a lead-calcium alloy, and filled with a high-density active material. The plates are enclosed in chemically inert separator envelopes. At the top of each cell is a liquid and gas separator area with a drain to return any liquid to the cell. The cells are sealed from each other, and the connecting bars are sealed where they pass through the cell partitions.

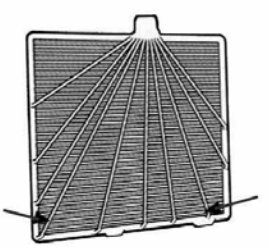

Construction of maintenance free battery

Recombination Battery A further development in maintenance- free battery design is the "recombination battery." These batteries have all of the electrolyte held in micro-porous envelope separators around the plates, which are then pressed together so that there is no free acid in the cells. In a recombination battery, there is slightly more negative plate material than positive plate material. This allows the oxygen released by the positive plates (near the fully charged position) to combine with the negative plate material rather than be released as gas. Because there is no loss of gas from these batteries, they can be fully sealed.

AC Delco…

…Batteries

Built-In Hydrometers Some maintenance-free batteries incorporate a built-in hydrometer to indicate the state of charge and condition of the battery. The hydrometer is color-coded. Green indicates that the battery is charged and serviceable. Green-black or black indicates that the battery requires recharging. Yellow indicates that the battery is faulty. Where a yellow hydrometer is showing, the battery should not be recharged or tested, and jumper cables should not be used. A new battery should be fitted and the alternator checked for correct operation.

Maintenance free battery built in hydrometer design

Maintenance free battery hydrometer colors

Fast Charging Maintenance-free batteries are not ideally suitable for "fast charging" or connection to a "fast-charger" for engine starting. When recharging, they should be disconnected from the vehicle electrical systems and slow-charged, in accordance with the manufacturer's instructions.

Fast charger

Maintenance free battery

Hybrid Battery A hybrid battery, or deep-cycle battery, produces a high-performance cold-cranking amperage. The "hybrid" design of this type of battery refers to the use of a lead-antimony alloy for the positive plate grids and a lead-calcium alloy for the negative plate grids. This allows the battery to provide a high current for cold starting in very cold conditions, without permanent harm to the battery.

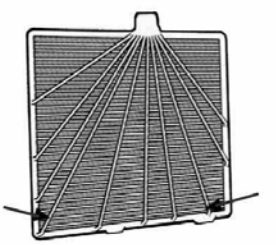

Hybrid battery grid

Need for Extra Charging The state of charge of the battery is maintained on the vehicle by the alternator. The output from the alternator is usually sufficient, but for vehicles used for short journeys or frequent stop-start use, additional charging may be required.

Battery on bench charger

Regular Charging Some batteries that are not being used regularly need to be charged at approximately monthly intervals to maintain their charge and condition. Batteries that become fully discharged, or are used continually at a low state of charge, can suffer from sulphation of the plates. This irreversible condition leads eventually to battery failure.

Recharging

Battery Chargers There are two types of off-vehicle chargers – the ”bench charger,” which has a current output of up to about 10 A, and the ”fast-charger,” which can recharge a battery in about 30 minutes, with a current of about 50 A. Not all batteries are suitable for fast charging and reference to the manufacturer’s instructions is required before charging any battery.

Bench charger

Fast chargers

Bench Charger The bench charger should be situated in a well-ventilated area of the workshop. Smoking also should be prohibited. The bench top should be resistant to acid and be made from an electrically insulating material.

No smoking!

Charger Operation The charger is plugged into the building’s electrical system and uses a transformer to reduce to 24, 12 or 6 V depending on the battery voltage. The actual output will be slightly higher than the nominal battery voltage in order to give an effective charge. The charger also includes a rectifier to change the AC (alternating current) supply to the DC (direct current) voltage required by the battery.

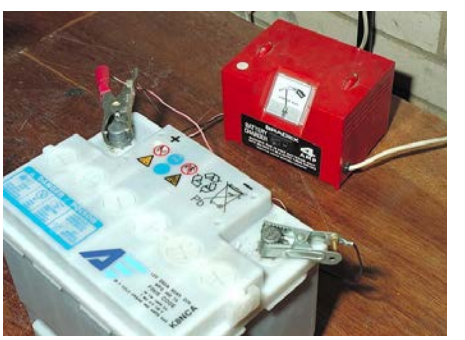
Bench charger

Voltage Control Bench chargers with voltage control have high initial current outputs, which fall as the battery charges. Chargers with current control can be adjusted to suit individual batteries.

Voltage and current control

Charge Rates The usual rule for battery charging is that the charge current should be set to a 10th of the Ah (ampere hour) rating of the battery. Alternatively, about a 16th of the reserve capacity, or a 40th of the cold cranking amps figure, gives a good guide. A fully discharged battery will take about 12 hours to fully recharge. When recharging partially charged batteries, that they be checked at regular intervals.

Testing a battery on charge

Disconnecting the Charger Always switch off the charger and leave it for about five minutes before disconnecting the cables and carrying out any tests. This is to allow any hydrogen gas to dissipate into the atmosphere and reduce ignition and fire hazards from accidental sparks. Hydrogen is highly flammable and explosive in an enclosed space such as inside the top of a battery.

Switch off the charger…

…Before disconnecting

Fast Chargers Fast chargers are portable items of equipment that will charge a battery in a short time. They can often be used for engine starting, depending on design.

Fast charger with engine starting facility

Build Up Of Gas Where possible, the battery caps should be removed during charging to prevent a build up of gas in the battery case. The area around the battery should be marked as a no smoking area.

Battery caps removed during fast charging

No smoking sign!

Overcharging There is a risk of overcharging and overheating a battery with fast chargers, and, therefore, if a temperature sensor is fitted, it must be used. If a sensor is not fitted, check frequently for gassing and monitor the battery temperature. Charging should be stopped when heavy gassing is evident or if the battery feels more than just warm to the touch.

Use of temperature sensor OR check the battery by hand

External Features The external features of a battery are the type and size of the terminal posts, the dimensions of the battery and the method used to attach it to the vehicle. The terminal posts are clearly identifiable as positive or negative by the positive sign (+) and/or red color, and the negative sign (-) and/or black color.

Battery features…

…Can vary

Tapered Round Terminal Posts On tapered round terminals, the positive and negative posts are different sizes. The larger post is positive and the smaller is negative. The difference in the sizes is used to minimize the risk of incorrect fitting. There are two size ranges, with a smaller version used by some manufacturers, generally in the Far East, and a larger size used by Western European and U.S. manufacturers. These round post terminals have a cast-cap type or clamp-type cable terminal.

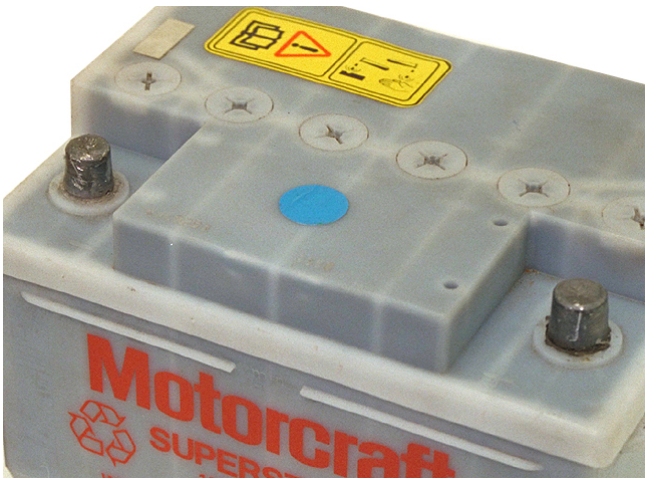

Round battery posts

'L' Terminal Posts Some manufacturers use batteries with a flat, or "L" terminal on the battery, and a flat terminal on the cable, and a nut and bolt to complete the connection. Some U.S. vehicles use a side terminal, which has an internal thread, and the connection is made with a bolt through a flat terminal on the cable.

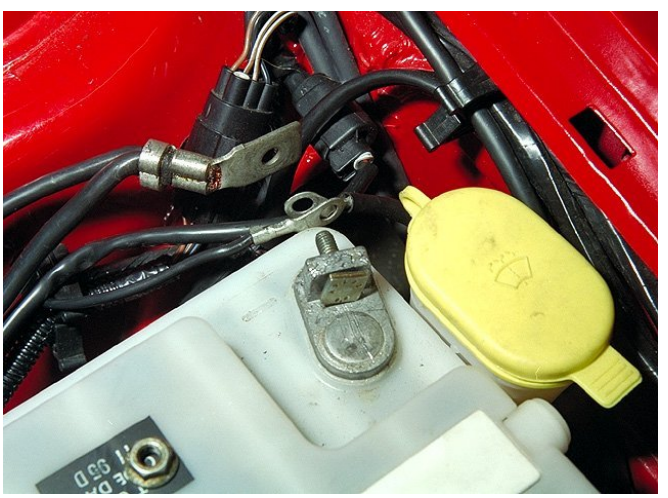
Flat posts

Battery Cables Battery cables must have sufficient cross-sectional area to carry the starter motor and electrical systems current. The feed to the starter motor is a heavy-duty insulated cable, and the ground cable is of similar construction, or may be a braided strap.

Main supply

Component earth

Body earth

Starter/engine earth

Describe a safe procedure for fast-charging a battery.

Read the previous section again and note down some key bullet points here:

-
-
-
-
-

Battery Charging

Battery Charging Battery charging should only be carried out in a well-ventilated area specially designated for the purpose. A suitable acid resistant and non-conductive bench is recommended. A face shield (to prevent acid splashes on the face and in the eyes) should be used. Sterile eyewash should also be available for use if acid does splash into the eyes. No-smoking signs should be clearly displayed.

Take care when working with batteries

Slow and Fast Charging There are two ways of charging batteries in the workshop; one is a slow or trickle charge and the other is a fast charge. These require two types of chargers. Most batteries can be fast charged, but this should only be carried out infrequently. If a high charge is used it can cause some deterioration of the active materials of the battery.

Bench charger

Fast charger

Charger Operation A slow charger or bench charger is plugged into the building's electrical supply. A transformer is fitted inside to reduce the voltage to 6, 12 or 24 volts, to suit the battery or batteries on charge. Also fitted is a rectifier to change the AC volts of the electrical supply to the DC volts needed for charging batteries. The charger is connected to the battery terminals with the correct polarity. After setting the control switches, the charger is then turned on at the main switch.

Correct polarity is important

Charge Rate There are a number of different types of chargers and these should be used in accordance with the manufacturer's instructions. The recommended charge rate for a battery is one-tenth of the ampere-hour capacity. A 40 Ah battery should be charged at 4 A. If the ampere-hour capacity is not known, set the rate to one-sixteenth of the reserve capacity. Where the charge current can be adjusted, this should be used to set the rate.

Battery charger

Multiple Battery Charging A number of 12-volt batteries can be charged at the same time. However, this should only be done if the charger has the capacity. The batteries should be of similar size and be connected in parallel for a 12-volt charge rate or in series for a 24-volt charge rate.

Connecting batteries in parallel (12 V) …

…And series (24 V)

Batteries on Charge Batteries on charge should be checked at regular intervals to watch for progress and to remove them from the charger when they are fully charged. Hydrometer readings are used for this test.

Checking batteries on charge with a hydrometer

Safety First It is important that the charger is switched off before it is disconnected from the battery. As another safety precaution, leave the batteries for about five minutes before the charger cables are disconnected. This will allow any flammable gas to dissipate.

Turn charger off before disconnecting the charger

Fast Charging A fast charger can be connected to the battery in a vehicle to give a quick boost when a battery has a low charge. Some of these chargers have an engine-start facility. Always follow the equipment manufacturer's instructions when using this type of charger. Some batteries are not suitable for fast charging. Refer to the vehicle or battery manufacturer's data for recommendations.

Fast charger connected to battery

Fast Charge Rate and Time Fast chargers have a time clock for setting the charger for a fixed charge period. Some include a temperature probe that switches off the charger if the battery becomes overheated. Keep a close watch on the battery temperature if a fast charger does not have a temperature probe. The maximum setting for a fast charge should not exceed one hour at five times the normal charge rate.

Fast charger with time clock

Read the previous section again and note down some key bullet points here:

-
-
-
-
-

Starting System

Introduction The engine starting system consists of a heavy-duty motor with a drive pinion that engages with a gear on the engine flywheel, and an electrical control circuit to operate the motor.

Pre-engaged starter

Inertia motor and solenoid switch

Starter Motor Power The starter motor power output has to be able to crank a cold engine at sufficient speed to start the engine. A two-liter gas engine will have a starter motor of about one kilowatt and will spin the engine at about 150 rev/min. A similar-sized diesel engine will require double the power and twice the cranking speed to start.

Starter Motor and Control Circuit The main components of the starter motor are the magnetic fields, armature, drive pinion and solenoid. The circuit consists of a battery supply, ground cables and the starter switch.

Solenoid, pinion and armature

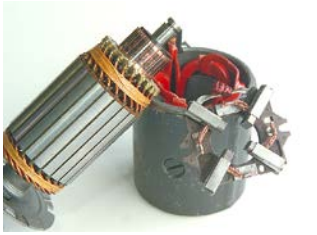

Field windings and commutator

Starter Motor The starter motor is a direct current (DC) electromagnetic unit that usually has two pairs of magnetic pole shoes arranged at opposite positions inside the motor casing. The casing acts as the yoke for the magnetic poles. The magnetic pole shoes can be strong permanent magnets or electromagnets using a winding.

Pre-engaged motor

The Armature The armature, which consists of a series of wire conductor loops wound around a laminated iron core, is mounted on the motor spindle. The conductor loops are terminated into segments of a commutator. Carbon or composite brushes conduct the motor electrical supply through the commutator segments to the individual conductor loops.

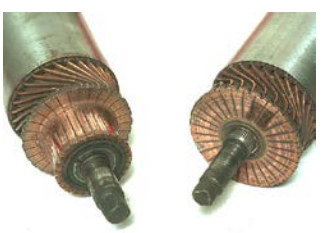

Armatures

Basic Motor Operation The construction of a simple, direct current motor is shown here. The magnetic force between the poles is from north to south. A loop conductor inside the magnetic field is provided with a DC electrical supply through a split slip ring, which forms a simple commutator.

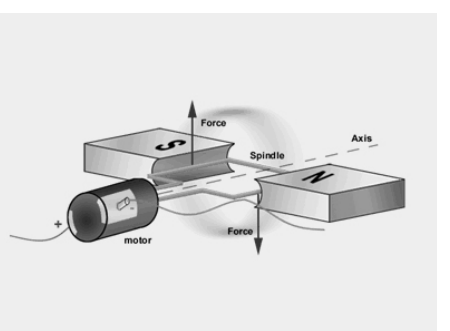

Direct current motor operating principle

Magnetic Field When an electrical current is passed through a conductor, a magnetic field is formed around that conductor. The magnetic field direction depends on the direction of the current flow. When the conductor is placed inside a fixed magnet, the magnetic field distorts to produce a repelling magnetic force, which pushes on the conductor.

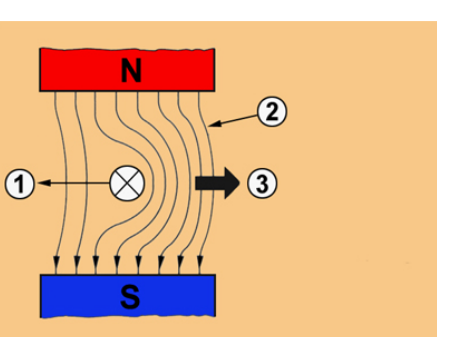

Electric current through a conductor in a magnetic field

Loop Conductor When an electrical current is passed through a loop conductor, the magnetic field around the conductor is in the opposite direction in each side of the loop. The loop conductor on a motor is fitted to, or forms part of, a spindle so that it is free to rotate.

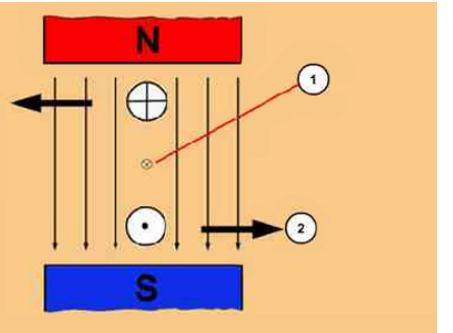

Magnetic forces reacting to give rotary motion

Loop Conductor in a Magnetic Field When the loop conductor is placed inside a magnetic field and an electrical current is passed through the loop, the resulting magnetic forces will cause the loop to rotate until it is out of the magnetic attract-and-repel positions of the magnetic fields. At this point, the current flow direction in the loop conductor is reversed by the changed positions of the commutator contacts, and the inertia of the loop brings it again into the effective magnetic field position. The loop will, therefore, continue to rotate.

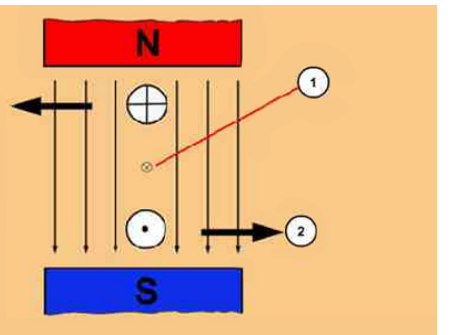

Single loop motor

Armature Windings In practice, it requires a large series of loop conductors to provide a motor with continuous rotation and good torque characteristics. A commutator is fitted in order to supply each loop winding when it is in alignment with the field magnets and to maintain the current in the proper direction. Current is passed to the commutator segments through spring-loaded brushes held in position by brush holders on the motor end plate.

A series of windings on the armature give a continuous rotary motion

Speed and Torque A starter motor requires strong magnetic forces to produce the speed and torque to crank an engine at sufficient speed for starting. For this the armature is made with soft iron cores in order to make strong electromagnets, which are able to change polarity with the direction of current flow in the loop conductors. Laminations of soft iron are used for the cores in order to reduce magnetization losses. They are insulated from each other and assembled as a single unit on the armature.

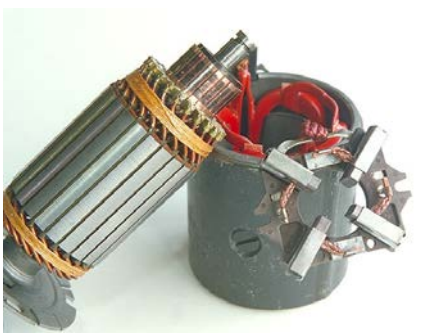
Armature and field coils

Magnetic Fields The magnetic strength of the field magnetic poles is usually produced by using an electrical winding around the pole shoe. The wire coil is wound around one pole shoe and then the other in the opposite direction, so that the opposing field poles are produced opposite each other in the casing.

Field windings

Motor Drive Gear The drive from the motor is taken from a pinion gear on the spindle, to the large diameter starter ring gear on the engine. The starter ring gear is fitted to the outside of the flywheel on manual transmission vehicles, or the torque converter drive plate on automatic transmission vehicles. The pinion meshes with the ring gear only during starting and is made to slide axially on, or with, the spindle in order to engage the drive when operated.

Ring gear on a flywheel

Starter pinion

Pre-Engaged Starter On a pre-engaged starter motor, the drive pinion is brought into mesh by the action of an electromagnetic solenoid mounted on the starter motor casing. The solenoid has a soft iron plunger, which is drawn into the magnetic field that is produced inside the solenoid when an electrical current is passed through the solenoid windings.

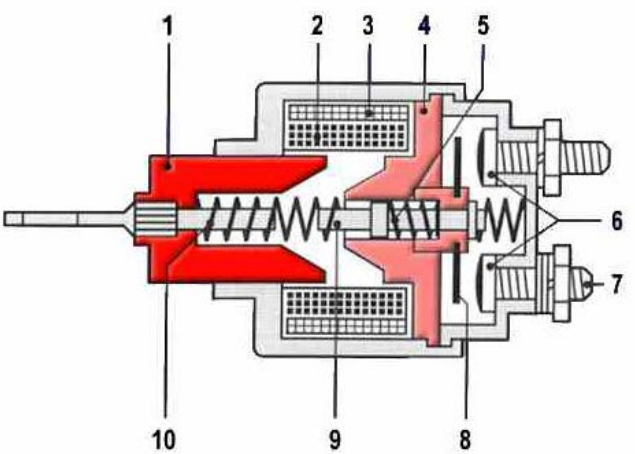

Solenoid and plunger[3]

Pinion Engagement Connected to the plunger is a lever, which is pivoted so that, as one end is pulled into the solenoid, the opposite end pushes the pinion into mesh with the starter ring gear. The pinion is mounted on a unidirectional clutch, which is fitted to a sleeve with an internal spline to take the drive from the starter spindle. On the outside of the sleeve is a radial groove to take the fork of the engagement lever.

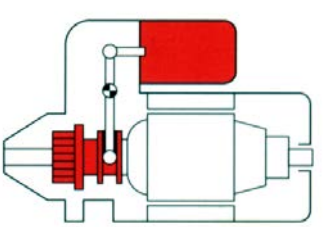

Pinion movement[3]

Solenoid Contacts At the other end of the solenoid are the electrical contacts that form the switch to pass the electrical current to the motor. The solenoid on many pre-engaged starter motors has two windings. These are the “closing” and ”holding” windings.

Pull-in Winding The closing winding or pull-in coil operates as soon as the solenoid is energized. This winding has a ground return through the motor windings. This passes a current into the motor so that it rotates slowly during the engagement phase. Once the switch contacts are fully engaged, the holding winding holds the switch in place. The closing winding does not conduct once the motor current has been switched on.

Hold-on Winding A holding coil is wound around the solenoid. This creates the magnetic field required to hold the solenoid in the engaged position during starting. When the starter switch is released, a spring returns the solenoid plunger to its "off" position.

One-Way Clutch If the engine were to start under these conditions, it would drive the motor spindle at an excessive speed. To prevent this on pre-engaged drive-starter motors, a unidirectional overrun clutch is fitted on the pinion. This allows the motor to drive the engine, but stops the engine driving the motor. A roller type overrun clutch is a popular method, although a few other types are used. These clutch units are sealed for life and require replacement if they fail while n service.

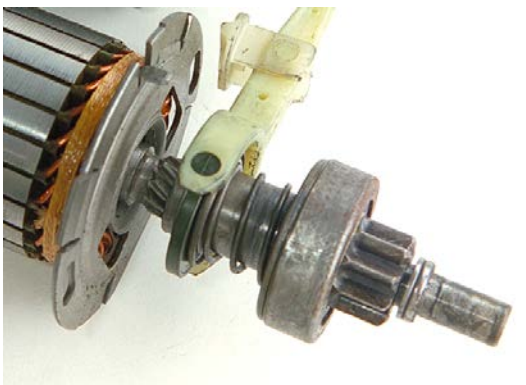
One way clutch and pinion

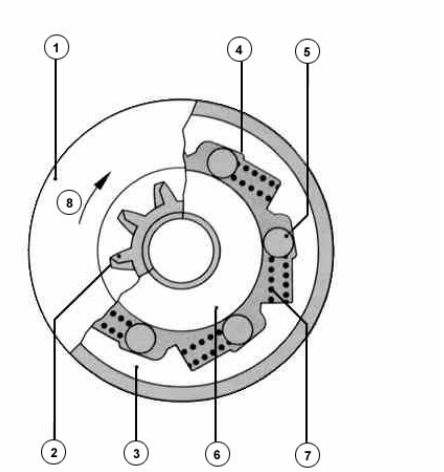

Clutch operation[3]

Inertia Drive Motors On early inertia type starter motors, a spiral, or helical sleeve, carried the pinion, which slid into mesh because of the forward drive from the motor spindle and out of mesh by the engine spinning. A spring inside the pinion barrel held the gears out of mesh when the starter was not in operation.

Inertia starter

Motor Design Variations There are some variations in starter motor design and construction. The conventional field coil construction consists of four coils wound around pole shoes. The direction of current flow in the coil windings produces two north and two south poles opposite each other. The electrical feed from the battery is connected to the field coils and then conducted into the armature windings by brushes that rub on a commutator.

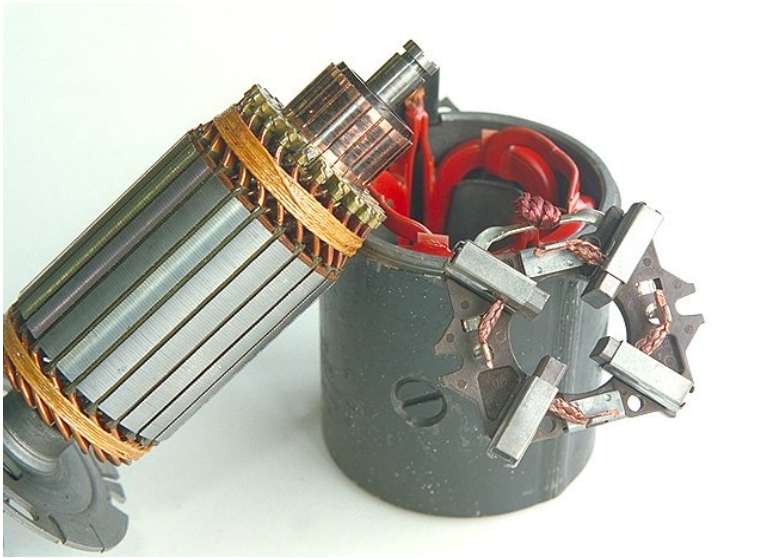

Starter case and field windings

Series Wound Fields Simple electrical circuits for the field coils and armature windings are shown here. These windings can be shunt-wound (parallel) or series-wound, which is the more commonly used circuit.

Series-Parallel Fields An alternative arrangement is the series-parallel motor, which has parallel field coil connections, and field-to-armature connections in series. The circuit diagram for this type of motor is shown here. The advantage of this arrangement is in the reduced resistance in the circuit, allowing a higher electrical current to give increased power and torque.

Series circuit

Series-parallel circuit

Wave Winding Another method of field coil construction is the ”wave wound” type, which has similar characteristics to the conventional types, but is more compact and lighter. This type of field winding is often used with a face-type commutator to give a light and compact type of starter motor.

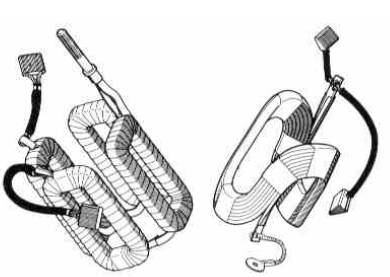

Normal and wave wound field coils

Permanent Magnets (PM) Motors Many small, modern starter motors use permanent magnets for the field poles. These motors have high- speed and low torque characteristics and are suitable, without additional gearing, for gasoline engines up to 1.9 liters.

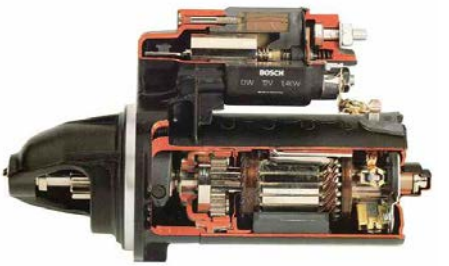

Bosch starter motor

Intermediate Drive Gears On permanent-magnet starter motors for light diesel engines and gasoline engines up to 5 liters, an intermediate planetary gear set between the motor and drive pinion is used. This intermediate gearing modifies the speed and torque characteristics of the motor and makes it possible to construct starter motors that can be 40 percent lighter in weight. The starter electrical current is passed through the armature only. On a planetary gear motor, the spindle is fitted with a sun wheel, and the motor casing with the annulus. The output to the drive pinion is made from the planetary gear carrier.

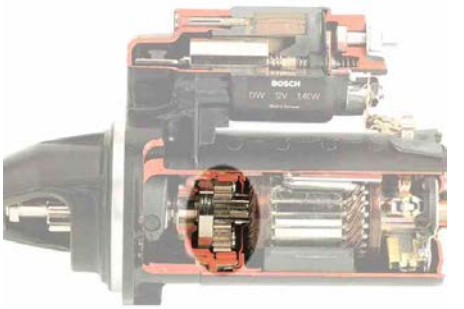

Intermediate transmission motor

Starter Motor Control Circuits Starter motor control circuits use a heavy-duty electrical relay, called a solenoid, to switch the large starter current to the motor. The solenoid is an electromagnetic switch and, on modern pre-engaged starter motors, is attached to the top of the motor where it performs the switching function and is also used to slide the motor drive pinion into mesh with the starter ring gear on the engine flywheel.

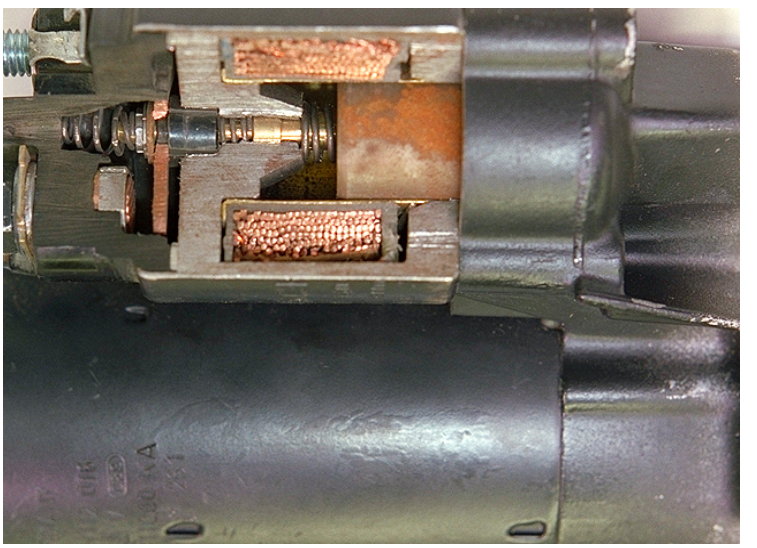

Solenoid construction

Basic Starter Circuit A basic starter circuit is shown here. The main components are the battery, starter switch (which is usually part of the ignition switch), the solenoid and motor, connecting cables and the ground and return circuit. The battery and starter cables are of heavy-duty construction to carry a large current to the motor. The control cables are standard low-current cable sizes. If any of these cables have to be replaced, cables of the same size, or as specified by the vehicle manufacturer, should always be used.

Automatic Transmission Systems Starter motor circuits may have additional automatic switching to prevent the engine from being started in particular situations. Automatic transmission systems incorporate an inhibitor switch on the gear selector, which allows engine starting in the park and neutral positions only. This prevents the engine from being started with the transmission in gear, which could result in the vehicle pulling away unexpectedly. The inhibitor switch must be carefully checked and adjusted so that there is no risk of incorrect operation.

An automatic vehicle will only start in 'P' or N'

Electronic Anti-Theft Systems Many modern anti-theft electronic systems have an engine immobilizer that must be disengaged before the engine can be started. A typical circuit for this system is shown here.

Alarm operation

Explain why the field windings on starter motors are always in series with the armature.

Read the previous section again and note down some key bullet points here:

-
-
-
-
-

Charging System

Electrical Generator The electrical generator on modern vehicles is an alternator. Older vehicles used a dynamo, which gives a direct current without the need for a rectifier.

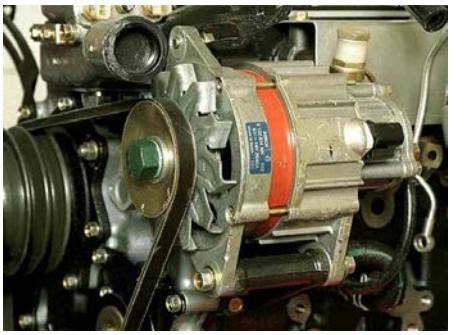

Alternator on an engine

Rotor and Stator There are two main parts of an alternator. These are the rotor and the stator. Together they produce an AC voltage output. An electrical current is induced or generated in the stator by the magnetic fields produced in the rotor.

Stator and rotor[3]

Rectifier The rectifier changes the AC voltage to a DC voltage, because that is what is needed for battery charging. Diodes in a bridge formation are used to route the electrical current in such a way as to convert the AC voltage to a DC voltage.

Rectifier and main output terminals

Regulator The voltage regulator senses the alternator output voltage. It then controls the rotor magnetic field strength to maintain the voltage at the correct level. The ignition or charge warning-light circuit is used to produce an initial magnetic field in the rotor during engine starting.

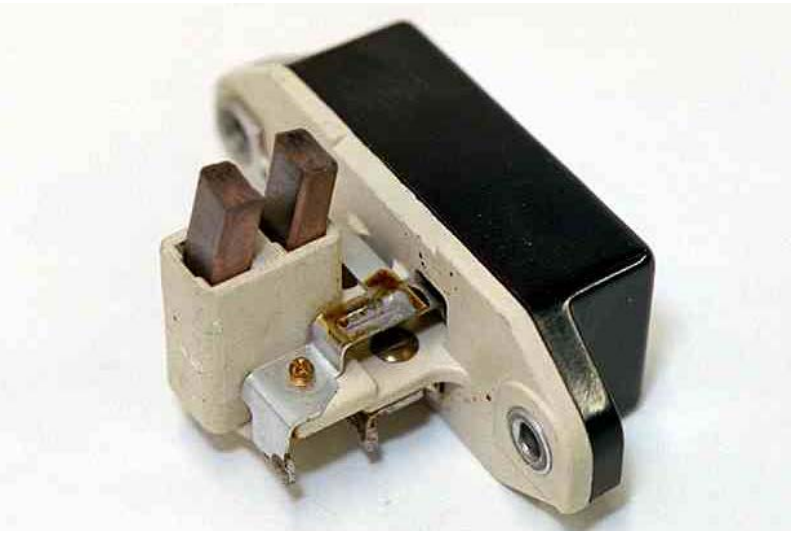

Voltage regulator

Modern Alternators On modern alternators, all of the main components are enclosed in a lightweight aluminum casing. The vehicle engine provides power to the alternator (through a drive belt and pulleys to the rotor) which is mounted on bearings in the end covers of the alternator casing. A typical alternator electrical circuit is also shown here.

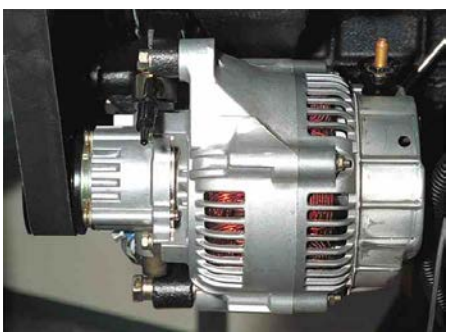

Modern alternator

Electromagnetic Induction The generation of an electrical current requires a changing magnetic field around a conductor. This process is known as electromagnetic "induction" and occurs under a variety of conditions, one of which is shown here. The voltage produced is alternating current (AC).

Three-Phase Alternators By increasing the loop conductors to three, at 120-degree intervals, a three-phase output is produced. This is similar to the method used in an alternator. A series of magnets (rotor) are made to rotate inside a conductor made up of three inductive coils (stator).

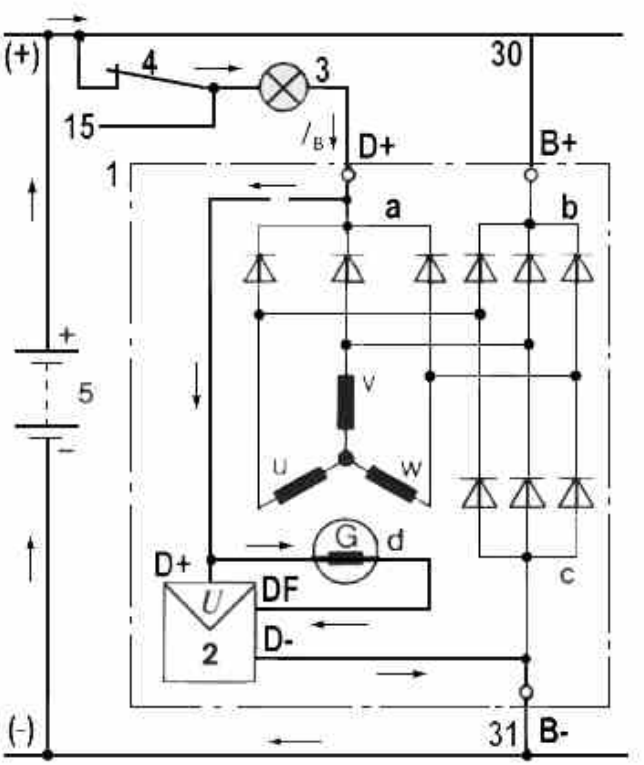

Alternator circuit[3]

Rotor Windings In a light vehicle, alternator magnetic fields are produced around magnetic poles on the rotor by an electrical current passing through coil windings. The poles are made from iron and shaped like claws with six fingers. There are two of these –one for each pole. They face each other and are set at each end of the rotor.

Rotor construction

Brushes and Slip Rings Wound inside the poles is the rotor winding, which is connected to slip rings at one end of the rotor. Carbon brushes are used to conduct an electrical current to the rotor windings through the slip rings. The arrangement of slip rings can be of either cylindrical or face type.

Rotor, slip rings and brushes

Magnetic Field When an electrical current is passed through the rotor windings, they become "excited" and a magnetic field is produced. The strength of the magnetic field is proportional to the voltage in the windings. The voltage in the windings is provided by the alternator during the charging phase and then controlled to regulate the alternator output voltage.

Rotor magnetic field[3]

Excitation Current The initial electrical current to "excite" the windings is provided through the ignition or generator warning-light circuit. The light acts as an indicator that the generator field is being provided with an initial current to "excite" the rotor windings, and as a warning when the voltage from the stator is less than battery voltage. Under normal conditions, the light should go out as soon as the engine is running.

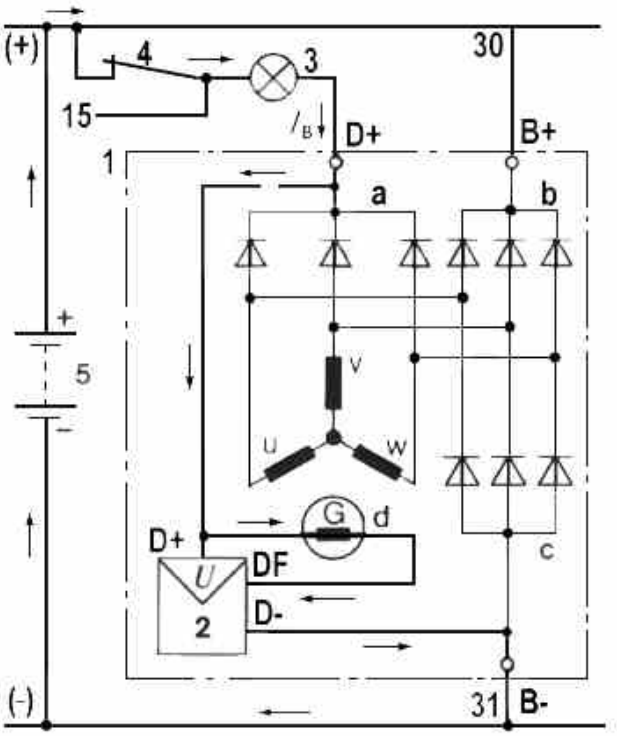

(highlight the excitation circuit)Alternator circuit diagram[3]

Warning Light The charge warning light goes out when the engine is running because of the nature of electrical current flow. Electricity always flows by the easiest route to ground. When the alternator is charging, the electrical route is from the stator to the field windings and is of a higher value than the battery. The higher voltage takes precedence and the warning-light circuit is bypassed.

Stator The stator, which is fitted inside the alternator casing, is made from soft iron laminations wound with three sets of windings. The three sets of windings give three separate outputs, or phases, of alternating current. The electrical current induced in the alternator flows in the stator because of the changing magnetic fields produced by rotation of the rotor. The speed of rotation, and the magnetic strength of the rotor, determine the value of the voltage that is produced.

Stator construction

Star and Delta Windings The windings are enamel-coated copper wire of a heavy gauge and, for light vehicle applications, are connected in a "star" formation. The windings can also be connected in a "delta" formation, and this is often used for larger vehicles. The voltage and current outputs from the two formations are different for the same magnetic field strength and alternator speed. The voltage is higher and current lower for the star formation, in comparison with the delta formation.

Star stator windings

Delta stator windings

Semi-conductor Diodes Modern alternator rectifiers use semiconductor diodes, in a bridge formation, to provide rectification of the alternating current (AC) to the direct current (DC) required to charge the vehicle battery.

Rectifier

Half-Wave Rectification Rectification of alternating current (AC) to direct current (DC) is achieved in a rectifier by allowing a forward flow of current to pass through a diode, and then preventing the reverse flow from passing through. This simple method is called partial or half-wave rectification.

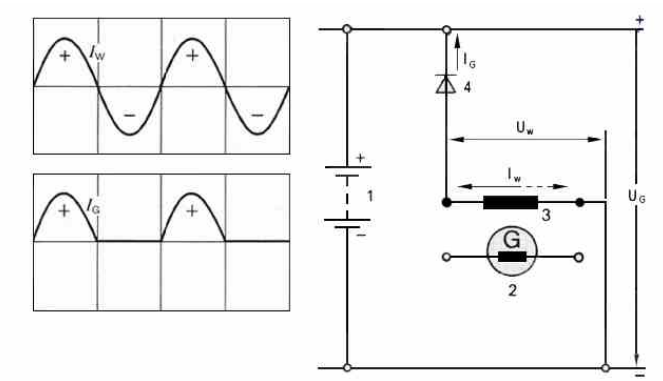

Simple diode controlling AC current flow to give half wave rectification[3]

Full-Wave Rectification A more efficient and effective system is full-wave rectification. To achieve this, a series of diodes are connected in a "bridge" arrangement, so that the current flow is routed through open paths created by the bias of the diodes. There are two open paths in the bridge rectifier – one for each direction of current flow. The output current flow is always in the same direction, and this gives a direct current flow.

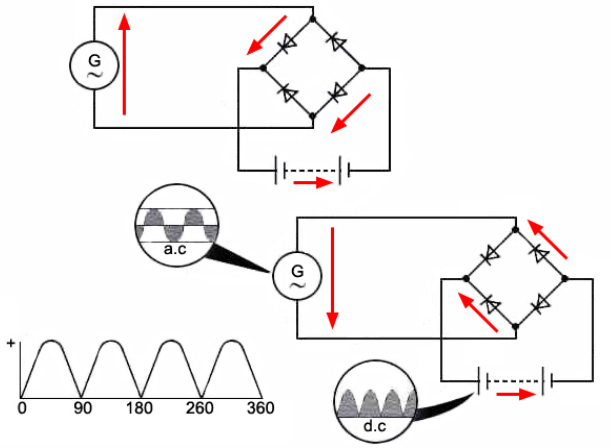

Bridge rectifier showing full wave rectification

Three Phase Rectification The three phases of the alternator output require six diodes arranged in the circuit as seen here. These arrows show the current flow for each phase and direction of flow of the alternating current. The output from the rectifier is connected to the vehicle battery and the circuit completed by a ground, return connection through the alternator casing.

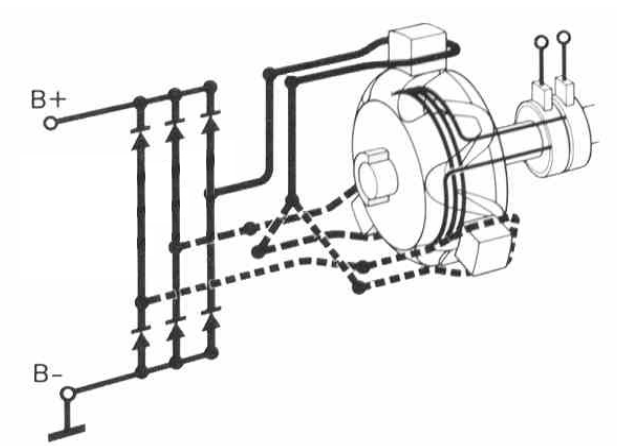

Alternator rectifier and current flow paths[3]

Field Diodes Three additional diodes are fitted in the circuit so that part of the output from the stator can be passed to the rotor. This is to increase the magnetic field strength when the stator voltage increases as engine speed increases.

Voltage Regulation The voltage from the stator increases as the engine speed increases. Without a control system, the voltage would rise to high levels and cause extensive damage to the alternator and electrical systems on the vehicle. The regulator is connected into the rotor field circuit to control the rotor winding voltage and therefore the rotor magnetic-field strength.

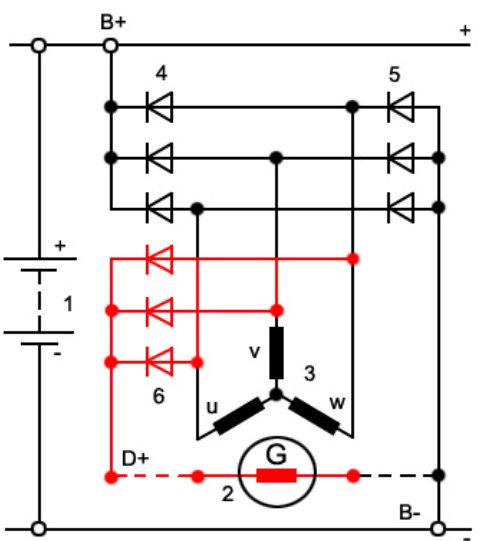

Field diodes and current flow to rotor and regulator[3]

Field Current Control Because the alternator output is dependent on speed and rotor magnetic- field strength, it is necessary to reduce the magnetic field strength as the speed increases. The regulator maintains a constant alternator output voltage. This is usually at about 14.2 volts, which is sufficient to charge the battery without causing excessive gassing, and, for maintenance-free batteries, is the optimum voltage level for correct charging.

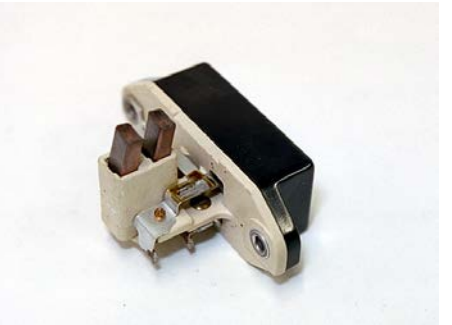

Regulator

Zener Diode The regulator consists of a small electronic circuit built around a zener diode. A zener diode conducts an electrical current only when its rated voltage is applied. In this circuit diagram of a regulator, the zener diode, resistors, and switching transistor are used to switch on a Darlington circuit to route an electrical current through the rotor windings, or off, to by-pass the rotor windings to ground.

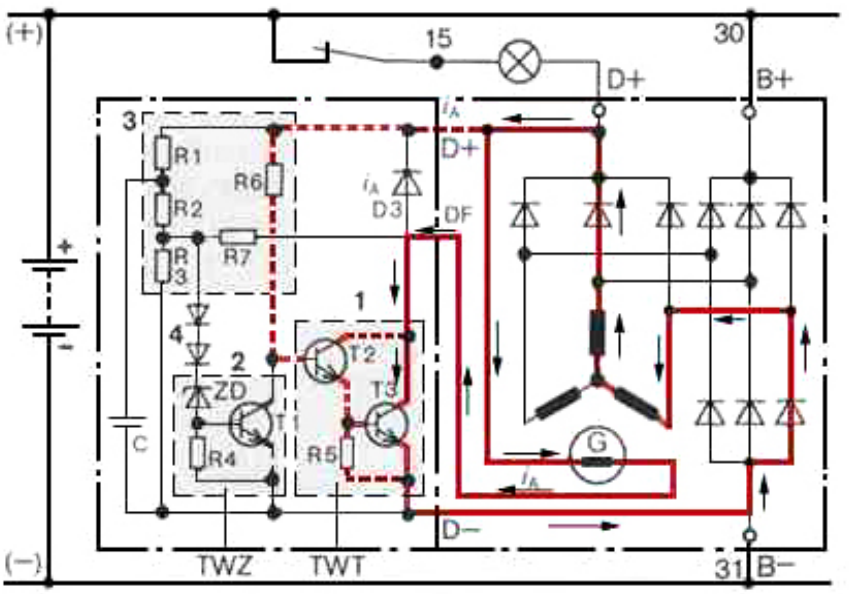

Regulator circuit - conducting[3]

Regulator Operation When the voltage on the zener diode is below the rated voltage, current passes alongside this route to the rotor windings. The magnetic field strength increases and the voltage induced in the stator increases. This is conducted in the circuit onto the zener diode and, when the rated voltage is reached, the zener diode becomes conductive so that current is passed to the base of a switching transistor and opens the route to bypass the rotor windings.

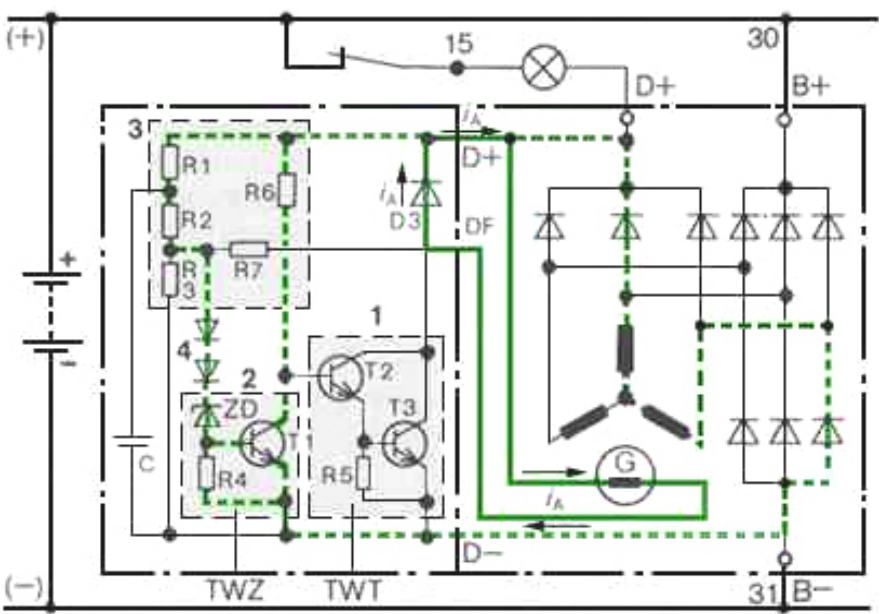

Regulator circuit - not conducting[3]

Rotor Winding Current As the voltage in the rotor windings is switched off, the voltage induced in the stator also reduces until it falls below the rated voltage of the zener diode. The diode becomes non-conductive and stops the current flow to the transistor, so that it switches off the bypass route, which, in turn, allows the current to return once again to the rotor windings.

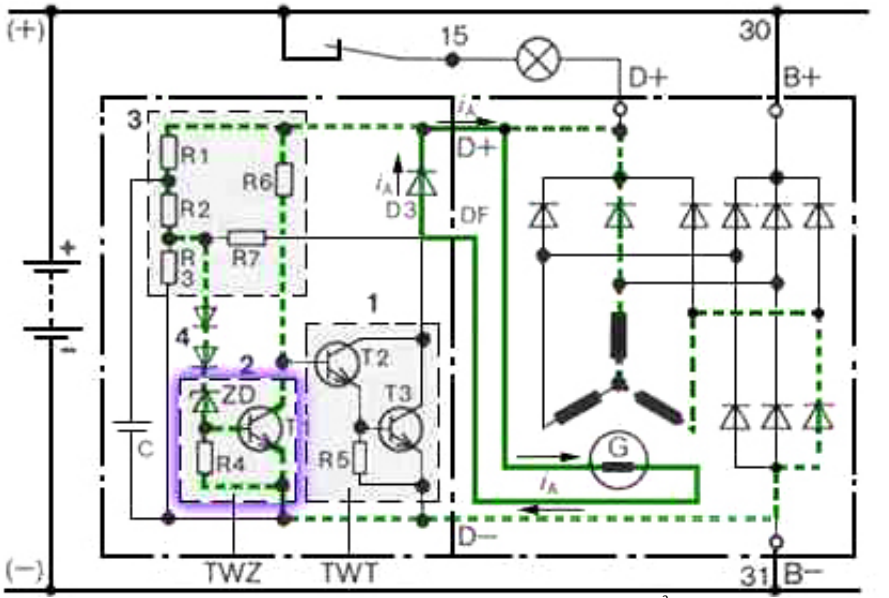

Rotor winding is switched on and off as a result of the zener diode conducting[3]

Constant Voltage This cycle is occurring repeatedly in the regulator to maintain a constant voltage output from the stator.

Alternator Circuit The alternator circuit arrangement, described on the previous screens, is the most common system in use. It is known as a "machine sensed" type. This type of alternator has two cable terminals and is grounded through the casing. The two terminals are the '+', which is connected directly to the battery positive terminal, and the 'Ind', '61' or 'D', which is connected to the charge warning lamp.

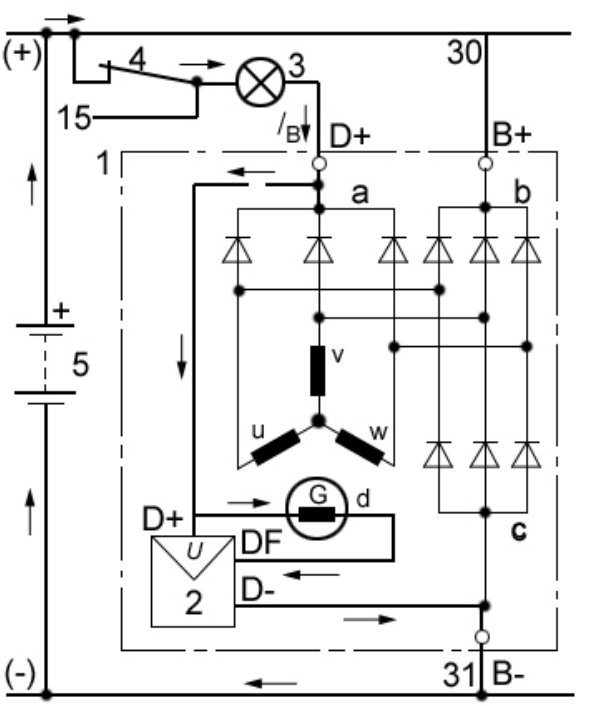

Internal and external alternator circuit[3]

Alternator and Charging Circuit A typical circuit for a modern alternator is shown here. The extra diodes from the center of the stator help to improve the overall efficiency.

Modern alternator circuit

Water Cooled Alternator When an alternator operates, the electrical flow produces heat. In this alternator, the heat is used initially to help the engine warm up. Once up to temperature, the engine cooling system then helps to keep the alternator cool. Most types, however, use a simple cooling fan.

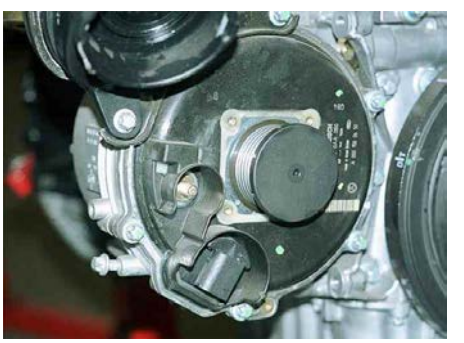

Water cooling improves efficiency

Modern High-Output Alternator Developments in design have produced very high output machines. Some are now capable of producing 140 A or more.

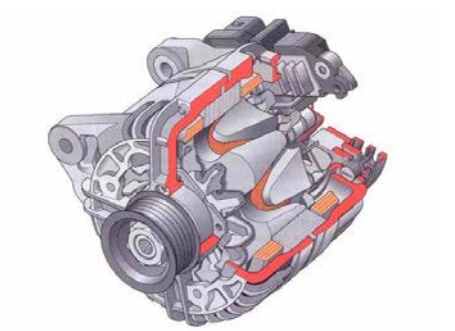

Modern Bosch alternator[4]

Explain why alternators need some form of voltage regulation is needed AND what value is common.

State TWO advantages of water-cooled alternators.

Read the previous section again and note down some key bullet points here:

-
-
-
-

Lighting Systems

Introduction Vehicle lighting systems are very important, particularly where road safety is concerned. If headlights were suddenly to fail at night and at high speed, the result could be serious. Remember that lights are to see with, and to be seen by.

Light switches

Lighting Clusters Lights are arranged on a vehicle to meet legal requirements and to look good. Headlights, sidelights and indicators are often combined on the front. Taillights, stoplights, reverse lights, and indicators are often combined at the rear.

Lights…

Are positioned…

In different ways by…

Different manufacturers

Bulbs The number, shape and size of bulbs used on vehicles is increasing all the time. A common selection is shown here. Most bulbs used for vehicle lighting are generally either conventional tungsten filament bulbs or tungsten halogen.

Selection of bulbs

Conventional Bulbs In the conventional bulb, the tungsten filament is heated to incandescence by an electric current. The temperature reaches about 2300^{0}C. Tungsten, or an alloy of tungsten, is ideal for use as filaments for electric light bulbs. The filament is normally wound into a 'spiraled spiral' to allow a suitable length of thin wire in a small space, and to provide some mechanical strength.

Tungsten Halogen Bulbs Almost all vehicles now use tungsten halogen bulbs for the headlights. The bulb will not blacken and therefore, has a long life. In normal gas bulbs, about 10% of the filament metal evaporates. This is deposited on the bulb wall. Design features of the tungsten halogen bulb prevent deposition. The gas in halogen bulbs is mostly iodine. The glass envelope is made from fused silicon or quartz.

Headlight bulb

Headlight Reflectors The object of the headlight reflector is to direct the random light rays produced by the bulb into a beam of concentrated light. It does this by applying the laws of reflection. Bulb filament position relative to the reflector is important, if the desired beam direction and shape are to be obtained.

Reflector

Reflector Construction A reflector is a layer of silver, chrome or aluminum deposited on a smooth and polished surface such as brass or glass. Consider a mirror reflector that 'caves in.' This is called a concave reflector. The center point on the reflector is called the pole, and a line drawn perpendicular to the surface from the pole is known as the principal axis.

Concave reflector

Focused Beam If a light source is moved along the principal axis, a point will be found where the radiating light produces a reflected beam parallel to the axis. This point is known as the focal point, and its distance from the pole is known as the focal length.

Light source at the focal point

Divergent and Convergent Beams If the filament is between the focal point and the reflector, the reflected beam will diverge - that is, spread outwards along the principle axis. If the filament is positioned in front of the focal point, the reflected beam will converge towards the principle axis.

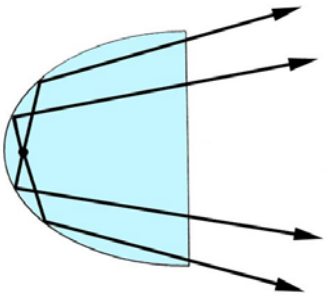

Light source behind the focal point

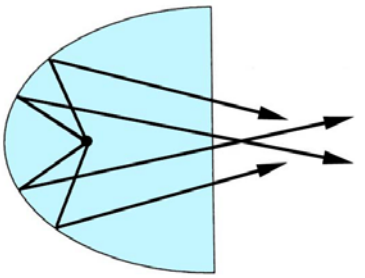

Light source in front of the focal point

Asymmetric Headlights The intensity of reflected light is strongest near the beam axis, except for the light cut off by the bulb itself. The intensity, therefore, drops off towards the outer edges of the beam. A common type of reflector and bulb arrangement is shown here, where the dip filament is shielded. This gives a nice sharp cut-off line when on low beam. It is used with asymmetric headlights.

Headlight Lenses A good headlight should have a powerful far-reaching central beam, around which the light is distributed both horizontally and vertically in order to illuminate as great an area of the road surface as possible. The beam formation can be considerably improved by passing the reflected light rays through a transparent block of lenses. It is the function of the lenses to partially redistribute the reflected light beam and any stray light rays. This gives better overall road illumination.

Headlights

Lenses Lenses work on the principle of refraction. The headlight front cover is the lens. It is divided up into a large number of small rectangular zones, with each zone being formed optically in the shape of a concave flute or a combination of flute and prisms. Each individual lens element will redirect the light rays to obtain an improved overall light projection or beam pattern.

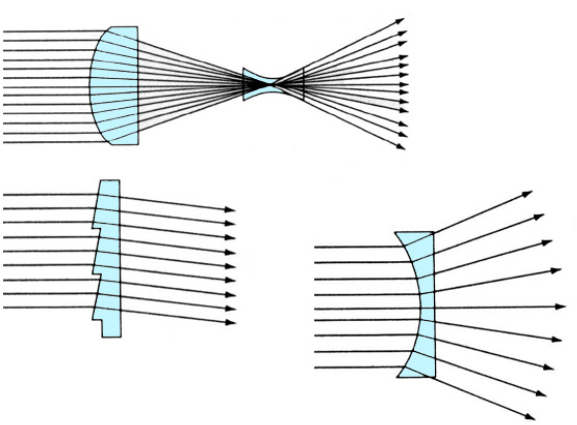

Headlight lens details

Complex Shape Reflectors Many headlights are now made with clear lenses, which means that all the direction of the light is achieved by the reflector. The clear lens does not restrict the light in any way. This makes the headlights more efficient, as well as attractive.

Modern headlights

Other Lights Sidelights, taillights, brake lights and others are relatively straightforward. Headlights present the most problems. This is because on low beam, they must provide adequate light for the driver, but not by blinding other road users.

Rear lights

Headlight Alignment The conflict between seeing and blinding is very difficult to overcome. One of the latest developments, UV lighting, which is discussed later, shows some promise. The main requirement is that headlight alignment must be set correctly.

Beam setter in use

Headlight Leveling The function of a leveling actuator is to adjust the low beam in accordance with the load carried by the car. This will avoid blinding oncoming traffic. Manual electric leveling actuators are connected up to a control on the dashboard. This allows the driver to adjust beam height.

Automatic Headlight Leveling Automatic static actuators adjust beam height to the optimum position in line with vehicle load conditions. The system includes two sensors (front and rear), which measure the altitude of the vehicle. An electronic module converts data from the sensors and drives two electric gear motors (or actuators) located at the rear of the headlights, which are mechanically attached to the reflectors.

State why headlight leveling is important.

Read the previous section again and note down some key bullet points here:

-
-
-
-
-

Stoplights and Reverse Lights

Introduction Brake lights are used to warn drivers behind that you are slowing down or stopping. Reverse lights warn other drivers that you are reversing, or intend to reverse. The circuits are quite simple. One switch in each case operates two or three bulbs. A relay may be used.

Stop and reverse lights form part of the rear light cluster

Brake lights and Reverse Lights The circuits for these two systems are similar. Shown here is a typical brake light or reverse light circuit. Most incorporate a relay to switch on the lights, which is in turn operated by a spring-loaded switch on the brake pedal or gearbox. Links from the brake light circuit to the cruise control system may be found. This causes the cruise control to switch off as the brakes are operated. A link may also be made to the antilock brake system.

Switches The circuits are operated by the appropriate switch. The reverse switch is part of the gearbox or gear change linkage. The brake switch is usually fitted so it acts on the brake pedal.

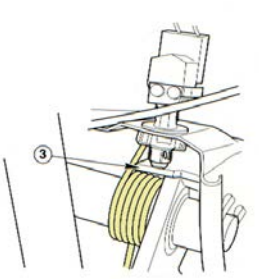

Stoplight switch[1]

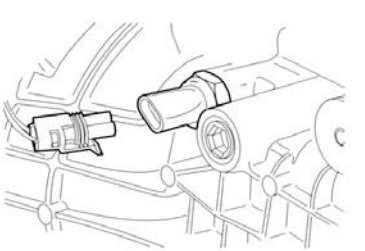

Reverse light switch[1]

A Real Lighting Circuit The diagram shown is the complete lighting circuit of a vehicle. The color codes used are discussed in Learning Program 17. However, you can follow the circuit by looking for the labels on the wires. 'N' for example, means 'Brown,' but this has no effect on how it works! Operation of part of this circuit is described over the following screens.

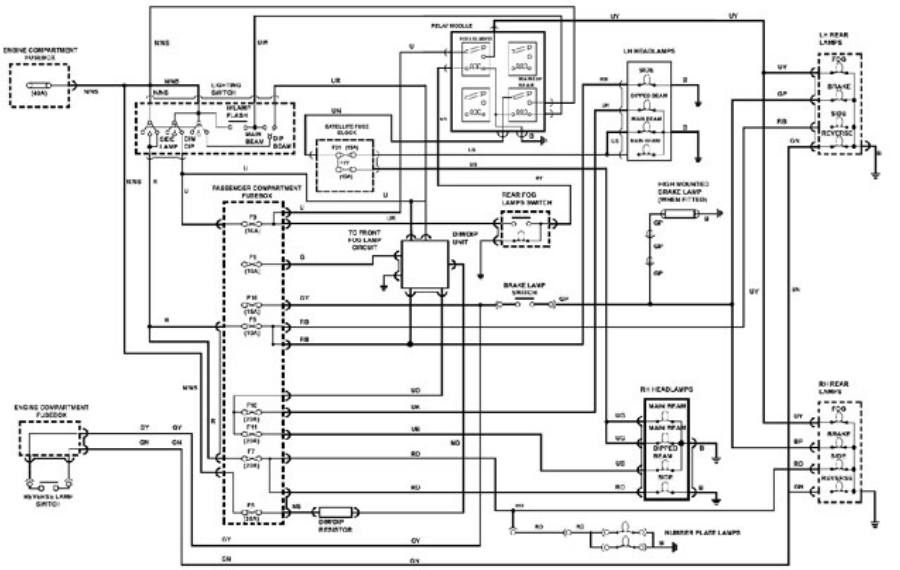

Complete lighting circuit

Reverse Lights The ignition must be on for these lights to operate. The reverse light switch gets its feed from fuse 16 on the GY wire. When the switch is operated, the supply is sent to the rear lamps on a GN wire. The switch is usually mounted on the gear change linkage or screwed into the gearbox.

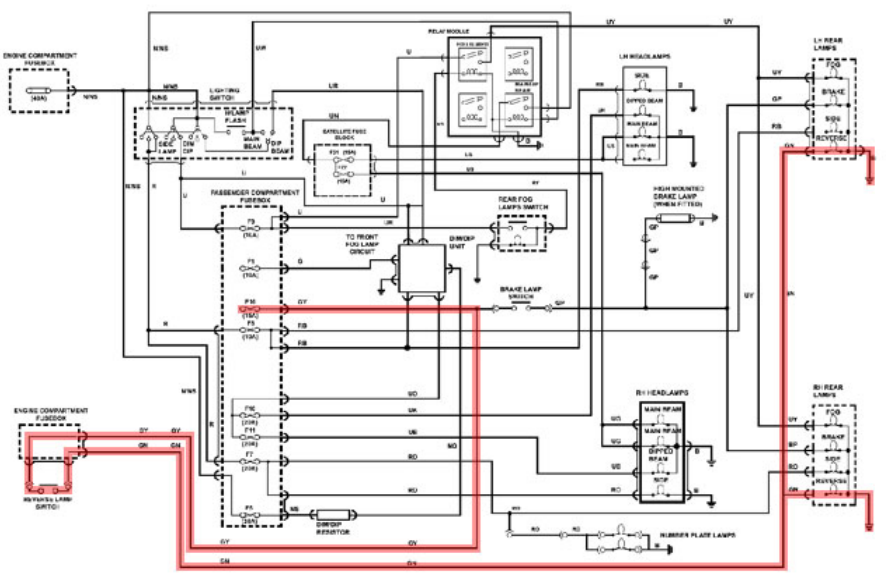

Reverse light circuit

Brake Lights The ignition must be on for these lights to operate. The brake light switch gets its feed from fuse 16 on the GY wire. When the switch is operated, the supply is sent to the rear lamps on a GP wire. A connection is also made to the center high mounted brake light. The switch is usually mounted on the pedal box above the brake pedal.

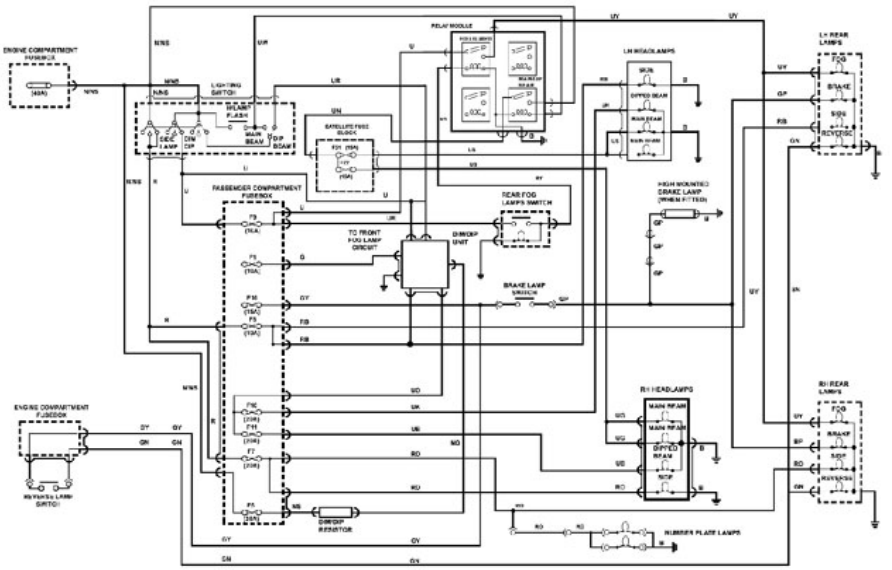

Highlight the stoplight circuit

Light Emitting Diodes Light emitting diodes (LEDs) are more expensive than bulbs. However, the potential savings in design costs due to long life, sealed units being used and greater freedom of design, could out weigh the extra expense. LEDs are ideal for brake lights.

Brake light using LEDs

Enhanced Safety A further advantage is that they illuminate faster than ordinary bulbs. The time difference is between 130mS for the LEDs, and 200mS for bulbs. Related to a vehicle brake light at highway speeds, the increased reaction time equals about a car length. This could make a major contribution to road safety.

Center High Mounted Stop Lights An LED center high mounted stop light (CHMSL) illuminates faster than conventional incandescent lamps, improving driver response time and providing extra braking distance. Due to their low height and reduced depth, LED CHMSLs can be easily incorporated with all vehicle designs. They can be mounted inside or integrated into the exterior body or spoiler.

CHMSL

Summary Reverse lights are operated by a simple on/off gearbox switch. Brake lights are operated by a simple on/off switch on the pedal box. Both circuits operate in much the same way. High mounted brake lights are now quite common, and many of these use LEDs.

State TWO advantages of an LED center high mounted stop lamp (CHMSL).

Make a sketch to show a brake light circuit using a relay.

Read the previous section again and note down some key bullet points here:

-
-
-
-

Interior Lighting

Introduction Interior lighting consists of several systems. The main ones are courtesy lights, map lights and panel illumination lights. The circuits are quite simple. However, they are often linked with the central locking system. Features such as delay and fade out are now common. This requires some electronic control.

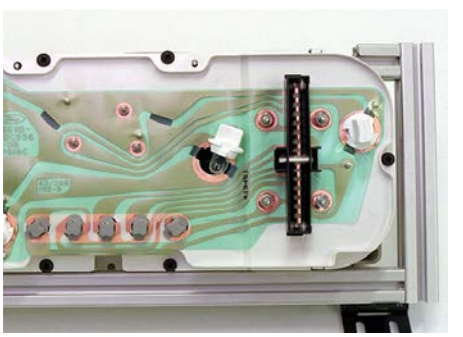

Instrument illumination

Map Light Map lights are an extra feature to assist with reading a map in the dark. Many types are available. Some are small spotlights, which form part of the interior light assembly. Others are positioned on the center console of the vehicle.

An extra light for map reading

Interior or Courtesy Lights Lights are designed to illuminate the vehicle interior when the doors are opened. Most cars have one central interior light above the rear view mirror, or two lights, on the sides above the driver and passenger's shoulders.

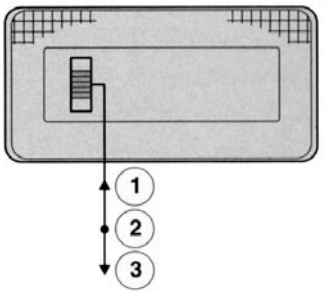

Switch positions[1]

Courtesy light

Door Switches Door switches are simple spring-loaded contacts that are made as the door opens. The contacts are broken again as the door closes. Rubber seals are sometimes used to keep water out. The same switches may also be used for the alarm system.

Switch positioned in the door pillar

Interior Light Circuit The circuit shown here is typical of many interior light circuits. The sliding switches have three positions, 'off', 'on' and 'door operated'. The control module allows delay operation. In this case, it is also used for the central locking system.

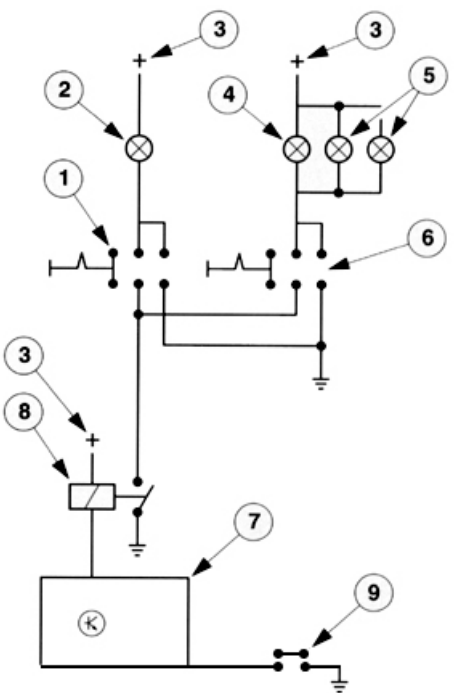

Circuit for interior lights[1]

Instrument and Panel Illumination Panel and instrument lights are illuminated when the vehicle sidelights are switched on. Most cars also incorporate a dimmer switch, so the level of illumination can be set.

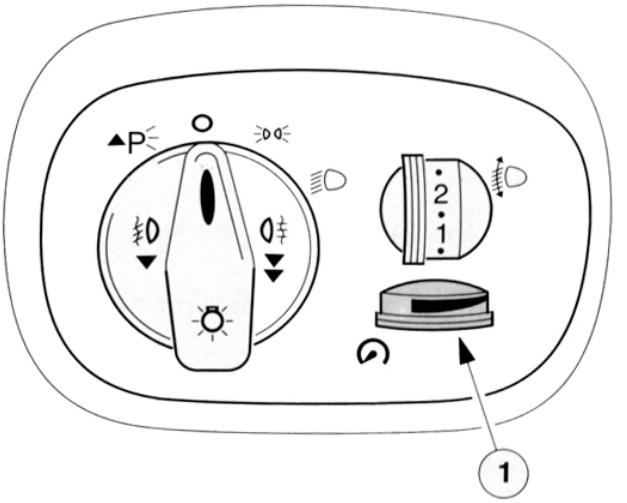

Lighting and dimmer switch[1]

Central Control Module Ford now fits a general electronic module (GEM), which controls the interior lights as well as a number of other functions. The interior lights are controlled with a delay timer to prevent them from being left on. On this system, the lights are illuminated when a door is opened and the ignition is in position 0 or I. They are extinguished twenty five seconds after a door is closed, when the car is locked, or the ignition switch is moved to position II or III.

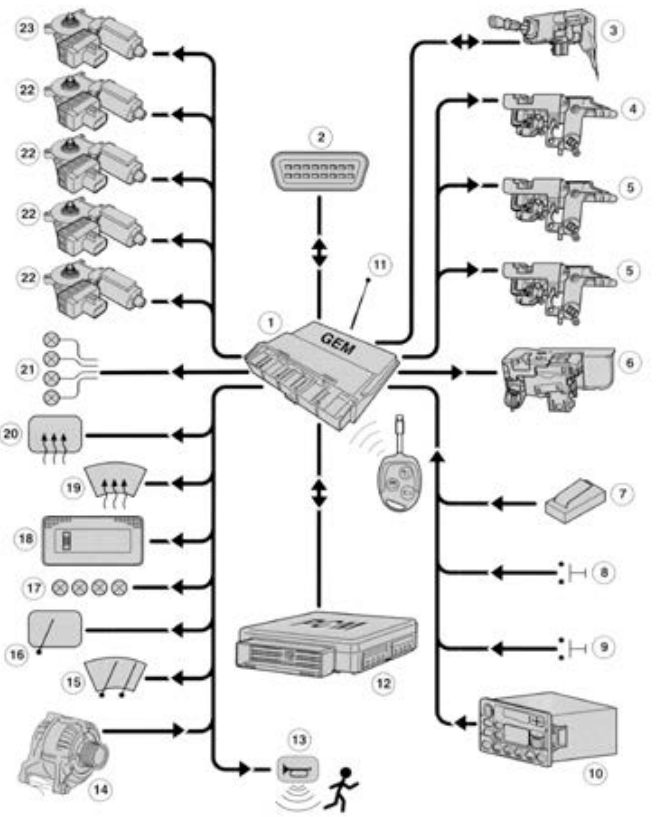

General electronic module (GEM) system[1]

Summary Interior lights are important for passenger comfort. Most now operate via some type of electronic control. One enhancement is a switching off delay, after the doors are closed. Some manufacturers are linking functions such as interior lights with other systems through a central control module.

State TWO ways in which interior lights are switched on.

Read the previous section again and note down some key bullet points here:

-
-
-
-
-

Lighting Circuits

Introduction Lighting circuits can appear complex at first view. However, if you concentrate on just one part of the circuit at a time you will find it easier to understand. Relays are often used because they take load off the control switches. They are still simple switches so don't panic! Take your time and you will find electrical circuits an interesting challenge.

Lighting circuits are important[2]

Basic Lighting Circuit Shown here is a simplified lighting circuit. While this representation helps to demonstrate the way in which a lighting circuit operates, it is not often used in this simple form. A full circuit is described later in this section.

Circuit Operation The circuit shows how various lights, in and around the vehicle, operate with respect to each other. The headlights for example, cannot be operated without the sidelights first being switched on. The spotlights are wired so that they only work when the headlights are on high beam.

Daytime Running Lights Circuit Daytime running headlights are an attempt to stop drivers from just using sidelights in semi-dark or poor visibility conditions. The circuit is such that when sidelights and ignition are on together, then the headlights will come on automatically at about one sixth of normal power.

Headlights on dim dip – and spot lights

Daytime Running Light Operation Daytime running lights are achieved in one of two ways. The first uses a simple resistor in series with the headlight bulb. The second uses a 'chopper' module, which switches the power to the headlights on and off rapidly. In either case, the 'dimmer' is by-passed when the driver selects normal headlights. Shown here, is a simplified circuit for daytime running lights, which uses a series resistor.

A Real Lighting Circuit The diagram shown is the complete lighting circuit of a vehicle. The color codes used are discussed in the Electrical Principals Learning Program. However, you can follow the circuit by looking for the labels on the wires. 'R' for example, means 'Red' but this has no effect on how it works! Operation of part of this circuit is as described over the following screens.

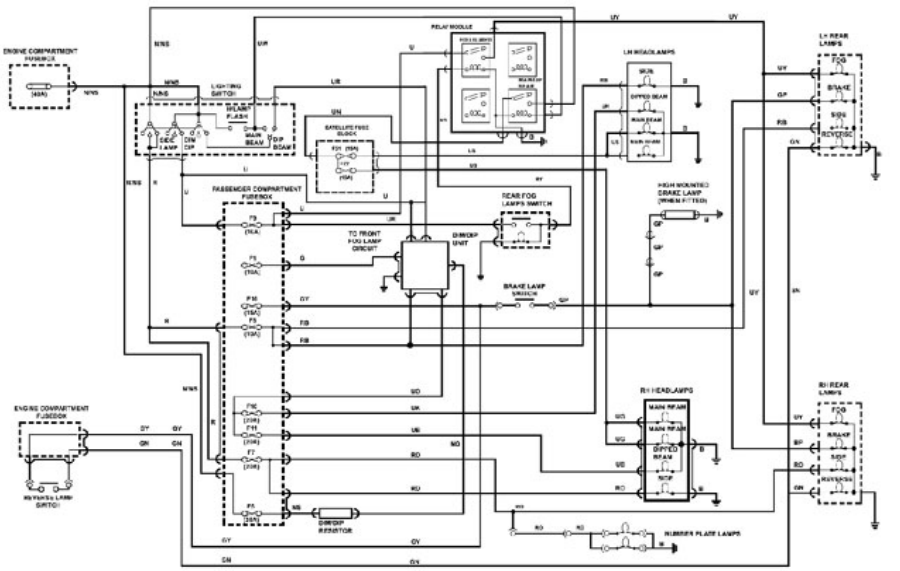

Complete lighting circuit

Side and Rear Lights Operation of the switch allows the supply on the N or N/S wire to pass to fuses 7 and 8 on the R wire. The two fuses then supply left lights on an RB wire, and right lights on an RO wire. The number plate lights are also supplied from here.

Low Beam When the low beam is selected, a supply is passed, on a U and UR wire, to the daytime running light unit, which is de-energized. This then allows a supply to fuses 10 and 11 on the OU wire. This supply is then passed to the left light on a UK wire and the right light on a U/B wire.

High Beam Selecting high beam allows a supply on the UW wire to the main/dip relay thus energizing it. A supply is therefore placed on fuses 21 and 22 and to each of the headlight main beam bulbs.

Daytime Running Lights When sidelights are on, there is a supply to the daytime running light unit on the RB wire. If the ignition supplies a second feed on the G wire from fuse 1, the unit will allow a supply from fuse 5 to the daytime running light resistor on the NS wire. This continues on to the daytime running light unit on an NG wire. The unit links this supply to fuses 10 and 11. These are the daytime running light fuses. The supply is therefore passed to the left light on a UK wire and the right light on a UB wire.

Rear Fog Lights When the headlights are switched on, a supply is made from the light switch to fuse 9 on a U wire. From this fuse, a supply is sent to the fog light relay contacts on a U wire, and the rear fog lamp switch on a UR wire. When the fog switch is operated, it sends a supply on the RY wire to close the relay. The main supply is now fed from the relay on a UY wire to both rear fog lamps.

Summary Following a circuit diagram is easy after a bit of practice. Think of it as a railway map that is used to get from A to B. Electricity will only make the 'journey' if the path is complete.

The circuits on this car are in good order

State TWO ways of achieving dim-dip operation.

Describe a simple way of being able to follow a circuit diagram.

Read the previous section again and note down some key bullet points here:

-
-
-
-
-

Turn Signals and Hazard Lights

Introduction Turning signals have a number of statutory requirements. The light produced must be amber, but they may be grouped with other lamps. The flashing rate must be between one and two per second with a relative 'on' time of between 30 and 57%. If a fault develops this must be apparent to the driver by the operation of a warning light on the dashboard. The fault can be indicated by a distinct change in frequency of operation or the warning light remaining on. If one of the main bulbs fails then the remaining lights should continue to flash.

turn signals form part of the styling[2]

Legislation Legislation requires a certain mounting position of the exterior lamps. The rear indicator lights must be within a set distance of the rear lights, and within a set height. The wattage of turn signal or indicator bulbs is normally 21W.

Turn signal bulb

Light cluster

Brake Lights The wattage of brake light bulbs is normally 21W. These lights often come under the heading of auxiliaries or signaling. A circuit is examined later in this section. The bulbs are often combined with the rear lights.

Stoplight bulb

Flasher Units The operation of this unit is based around an integrated circuit. The electronic type shown can operate at least four 21W bulbs (front and rear) and two 5W side repeaters when operating in hazard mode. This will continue for several hours if required. Flasher units are rated by the number of bulbs they are capable of operating. When towing a trailer or caravan the unit must be able to operate at a higher wattage. Most units use a relay for the actual switching as this provides an audible signal. The thermal type flasher units are still used, but on older vehicles.

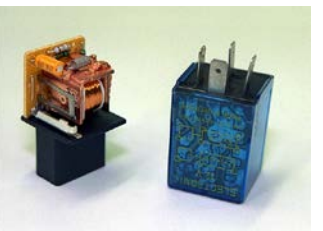
Modern electronic flasher unit

Old thermal flasher unit

Electronic Circuit The electronic circuit is constructed with the relay on a printed circuit board. Very few components are used, as the integrated circuit is specially designed for use as an indicator timer. The resistor and capacitor shown set the flash rate. The unit is designed to give an on-off ratio of 50% and an operating frequency of 1.5Hz (90 per minute).

Circuit details

Bulb Failure The on-off signal is passed to a transistor circuit, with a diode connected to protect it from back emf. Bulb failure is recognized when the voltage across a resistor falls. The bulb failure circuit causes the unit to double the speed of operation. Extra capacitors can be used for interference suppression.

Indicator warning light

A Real Indicator Circuit The diagram shown is the complete indicator circuit of a vehicle. The color codes used are discussed in the Electrical Principles Learning Program. However, you can follow the circuit by looking for the labels on the wires. 'G' for example, means 'Green,' but this has no effect on how it works! Operation of part of this circuit is described over the following screens.

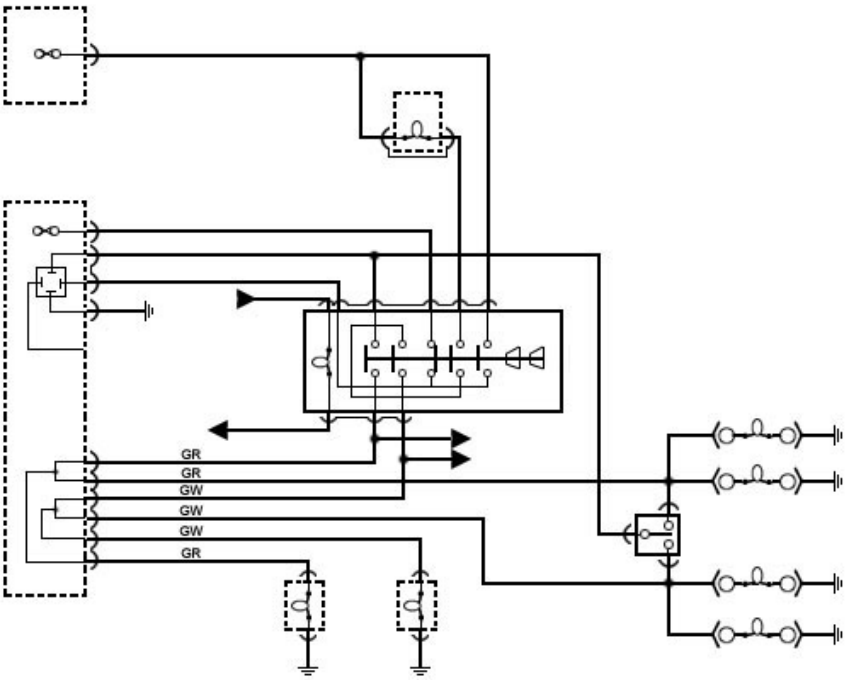

Complete turn signal circuit

Turn Signal and Hazard Circuit 💻 A turn signal and hazard lights circuit diagram is shown here. Note how the hazard switch, when operated, disconnects the ignition supply from the flasher unit and replaces it with a constant supply. The hazard system will therefore operate at any time, but the turn signals will only work when the ignition is switched on. When the turn signal switch is operated to the left or right, the front, rear, and repeater bulbs are connected to the output terminal of the flasher unit. This is what makes it operate and causes the bulbs to flash.

Circuit Operation 💻 When the hazard switch is operated, five sets of contacts move. Two sets connect left and right circuits to the output of the flasher unit. One set disconnects the ignition supply and another set connects the battery supply to the unit. The final set of contacts causes a hazard warning light to be operated. On this and most vehicles, the hazard switch is illuminated when the sidelights are switched on.

Right Hand Turn Signal 💻 With the ignition switched on, fuse 1 in the passenger compartment fuse box provides a feed to the hazard warning switch on the G wire. Provided the hazard warning switch is in the off position, the feed crosses the switch and supplies the flasher unit on the LGK wire. When the switch control is moved for a right turn, the switch makes contact with the LGN wire from the flasher unit, which is connected to the GW wire. This allows a supply to pass to the right hand front and rear indicator lights, and then to ground on the B wire.

Left Hand Turn Signal 💻 When the switch control is moved for a left turn, the switch makes contact with the GR wire, which allows the supply to pass to the left hand front and rear indicator lights, and then to ground on the B wire. The action of the flasher unit causes the circuit to make and break.

Hazard Lights By pressing the hazard warning switch, a battery supply on the N0 wire from fuse 3 or 4 in the engine bay fusebox crosses the switch and supplies the flasher unit on the LGK wire. At the same time, contacts are closed to connect the hazard warning light and the flasher unit to both the GW and GR wires. These are the right hand and left hand turn signals. The warning light and the main lights flash alternately.

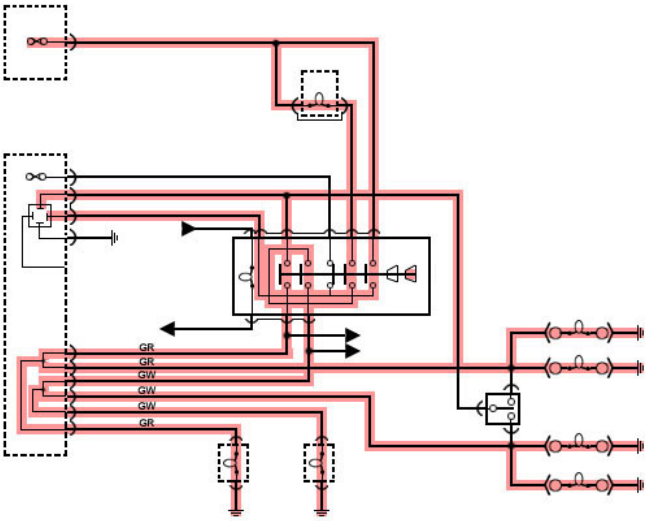

Hazard circuit

Summary Turn signal and hazard lights have interesting circuits. Hazard lights are intended to show a hazard such as a broken down car; they do not mean you can park in restricted areas…

State TWO uses for hazard lights.

Read the previous section again and note down some key bullet points here:

-
-
-
-
-

New Lighting Technology

Introduction Manufacturers are constantly working to improve vehicle lighting systems. A number of new technologies have recently been introduced. Light emitting diodes have been used for some time. However, there are still some interesting developments taking place with infrared and ultraviolet lighting. These are covered briefly in this section.

Lighting systems continue to improve[2]

Light Emitting Diodes The main advantages of light emitting diodes (LEDs), when used for lighting, is that they have a typical rated life of over 50 000 hours. The environment in which vehicle lights have to survive is hostile. Extreme variations in temperature and humidity, as well as serious shocks and vibration, have to be endured. LEDs are being developed in red, green and blue (RGB) groups. This will allow white light as well as other colors. The design possibilities for rear lights are therefore limitless.

LED stoplight

Infrared Lights Thermal imaging technology promises to make night driving visibly less hazardous. Infrared thermal- imaging systems are going to be fitted to cars. General Motors is now offering a system called 'Night Vision' as an option. After 'Night Vision' is switched on, 'hot' objects, including animals and people, show up as white in the thermal image. The image is projected onto the windscreen. On the vehicle, a camera unit sits in the center of the car behind the front grille.

GM night vision system

Gas Discharge Lamps Gas discharge lamps (GDL) are now being fitted to vehicles. They have the potential to provide illumination that is more effective and new design possibilities for the front of a vehicle. The conflict between aerodynamic styling and suitable lighting positions is an economy/safety trade off, which is undesirable.

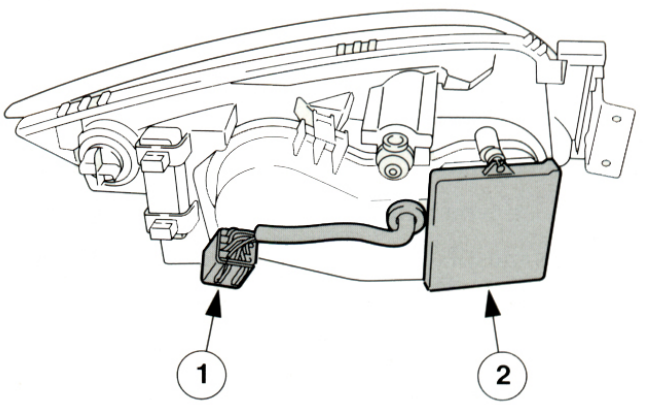

GDL system headlamp[2]

High Intensity Discharge The source of light in the gas discharge lamp is an electric arc. The actual discharge bulb used is only about 10mm across. Two electrodes extend into the bulb, which is made from quartz glass. The gap between these electrodes is about 4mm. The bulb is filled with xenon gas. These lamps are sometimes described as high intensity discharge (HID).

Self-Leveling Lights If the GDL system is used as a low beam, the self-leveling lights are required, because of the high intensities. Use with a high beam may be a problem because of the on/off nature. A GDL system for a low beam, which stays on all the time, is supplemented by a conventional high beam.

Ultraviolet Headlights The GDL can be used to produce ultra-violet lights. Since UV radiation is virtually invisible, it will not blind oncoming traffic but will illuminate fluorescent objects such as specially treated road markings and clothing. These glow in the dark much like a white shirt under a black light. The UV light will also penetrate fog and mist, as the light reflected by water droplets is invisible. It will even pass through a few centimeters of snow. Cars with the UV lights use two conventional halogen high/low lights and two UV lights. The UV lights come on at the same time as the low beams.

Road markings glowing at night

Blue Lights! Philips produces halogen bulbs called 'BlueVision'. The light stimulates driver concentration and makes driving in the dark less tiring. It also reflects much better on road markings and signs. The bulbs are directly interchangeable with existing bulbs. However, it should be noted that halogen technology is not comparable to the Xenon discharge technology.

Is blue whiter that white? (Phillips)

Jewel Aspect Lamps Jewel aspect lamps are based on the complex shape reflector technology that is widely used in headlamps. Beam pattern is no longer completely controlled by the lens but by the reflector. Conventional lens optics using prisms are minimized, giving the impression of greater depth and brightness.

Great looking lights

Summary Good lights are vital for safe driving at night. Interesting developments are taking place continuously. Many of the sophisticated systems now being introduced on top of the line cars will soon be available as standard options. Drive safely.

State one advantage AND one disadvantage of gas discharge lamps (GDL).

Read the previous section again and note down some key bullet points here:

-
-
-
-
-

Sensors

Introduction Sensors are used on vehicles for many purposes. For example, the coolant temperature thermistor is used to provide data to the engine management system as well as for the driver. The information to the driver is provided by a display or gauge.

Sensors The following screens list some of the things on a car that are sensed or measured, together with typical sensors. The sensors convert what is being measured into an electrical signal. This signal can then be used to operate a display, such as a gauge or warning light on the instrument panel.

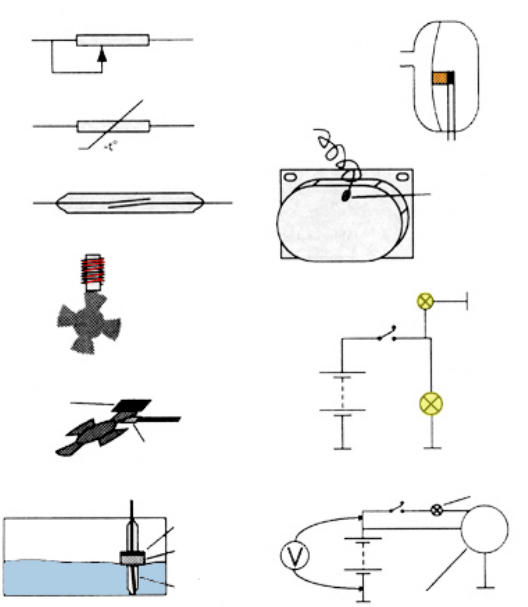

Sensors used for instrumentation

Fuel Level Fuel level is measured by using a variable resistor that is moved by a float. The position of the float is determined by how much fuel is in the tank. The resistance value is varied by a contact sliding over a resistor.

Tank sender unit full…

…And empty

Temperature The most common temperature measurement is that of the engine coolant. However, outside air, cabin, air intake and many other temperatures are measured. A thermistor is used for most applications. A thermistor is a special material that changes its resistance with temperature. Most types are described as negative temperature coefficient (NTC). This means that as temperature increases, their resistance decreases.

Temperature sensor

Bulb Failure A reed switch consists of two small strips of steel. When these become magnetized, they join and make a circuit. Bulb failure circuits often use a reed relay to monitor the circuit. In the circuit shown, the contacts of the reed switch will only close when electricity is flowing to the bulb being monitored.

Road Speed Road speed is often sensed using an inductive pulse generator. This sensor produces an ac output with a frequency that is proportional to speed. It is like a small generator that is driven by a gear on the gearbox output shaft. This type of sensor is also used to sense engine speed from the flywheel or crankshaft.

Engine Speed Engine speed can be sensed in a number of ways. The Hall effect sensor is a very popular choice, as it is accurate and produces a square wave output with a frequency proportional to engine speed. The Hall IC produces a voltage when it is in a magnetic field. The rotating plate shown here alternately prevents and allows the magnetism to reach the IC.

Fluid Level Fluid levels, such as washer fluid or radiator coolant, are often measured or sensed using a float and reed switch assembly. The float has a magnet attached that causes the contacts to join when it is in close proximity. The float moves up or down depending on the fluid level.

Oil Pressure Oil pressure may be measured and displayed on a gauge or, as is most common, by using a simple warning light. For this purpose, a diaphragm switch is used. As oil pressure increases, it acts on a diaphragm. Once it overcomes spring pressure, the contacts are operated. The contacts can be designed to open or close as pressure reaches a set level.

Brake Pad Wear Brake pad wear is sensed by using a simple embedded contact wire. When the friction material wears down, the embedded contact makes contact with the disc to complete a circuit. Some systems use a loop of wire that is broken when the pad wears out.

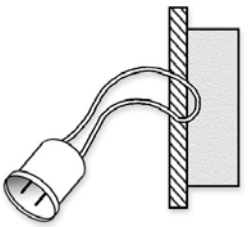

Brake pads with sensor wires

Lights in Operation Lights in operation can be monitored by a bulb and simple circuit. However, note that this circuit will only indicate that the switch is on. It will not confirm that the circuit is working. A good example of this is the main beam warning light.

Battery Charge Rate Battery charge rate can be sensed by a simple bulb circuit. The charge warning light will go out when the alternator produces an output on one side of the bulb, which is the same as that supplied by the battery to the other side. If an equal voltage is supplied to both sides, the voltage across the warning light will be zero, and thus it will not be lit!

Summary A wide range of sensors is used to operate instrument displays. Sensors convert what is being measured into an electrical signal. This may be by a simple on/off operation, a changing voltage output or a change in resistance.

State FIVE temperatures that are measured regularly.

Read the previous section again and note down some key bullet points here:

-
-
-
-
-

Gauges

Introduction By definition, an instrumentation system can be said to convert a 'variable' into a readable or usable display. For example, a fuel level instrument system will display a representation of the fuel in the tank using an analogue gauge.

Instrument panel

Instrumentation Instrumentation is not always associated with a gauge or a read-out type display. In many cases, a system can be used just to operate a warning light. However, it must still work to certain standards. For example, if a low outside temperature warning light did not illuminate at the correct time, a dangerous situation could develop.

Thermal Type Gauges Thermal gauges, which are ideal for fuel and engine temperature indication, have been in use for many years. This will continue because of their simple design and inherent 'thermal' damping. The gauge works by utilizing the heating effect of electricity and the widely adopted benefit of the bimetal strip.

Fuel gauge display

Bimetal Strip As a current flows through a simple heating coil wound on a bimetal strip, heat causes the strip to bend. The bimetal strip is connected to a pointer on a scale. The amount of bend is proportional to the heat, which in turn is proportional to the current flowing. Providing the sensor can vary its resistance in proportion to the fuel level or temperature, the gauge will indicate a suitable representation.

Damping The inherent damping is due to the slow thermal effect on the bimetal strip. This causes the needle to move very slowly to its final position. This is a particular advantage for displaying fuel level, as the variable resistor in the tank will move as the fuel moves, due to vehicle movement. If the gauge reacted quickly, it would be constantly moving. The movement of the fuel however, is in effect averaged out and an accurate display can be obtained.

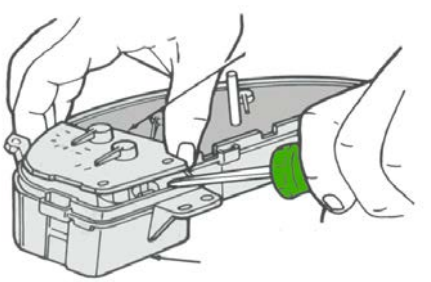
Thermal gauge being removed for repair

Variable Resistance Thermal type gauges are used with a variable resistor. This is either a float in the fuel tank or a thermistor in the engine water jacket. The sender resistance is usually at a maximum when the tank is empty or the engine is cold.

Fuel and temperature gauge circuit

Voltage Stabilizer A constant voltage supply is required to prevent changes in the system voltage, affecting the reading. The reason is that if system voltage increased, the current flowing would increase, and the gauges would read higher. Most voltage stabilizers are simple zener diode circuits as shown here.

Moving Iron Gauges The moving iron gauge was in use before the thermal type but is again gaining popularity on some cars. Two small electromagnets are used, which act upon a small soft iron armature. This armature is then connected to a pointer. The armature will position itself in between the cores of the electromagnets depending on the magnetic strength of each. The ratio of magnetism in each core is changed as the variable resistance sender changes.

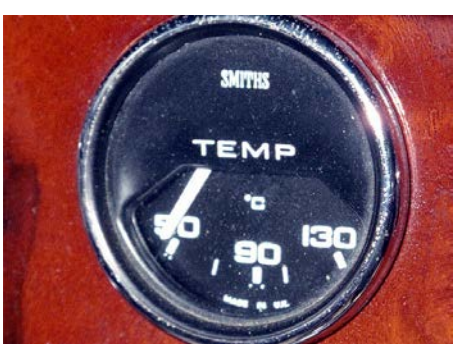

Gauge on an older vehicle

Gauge Movement This type of gauge reacts very quickly and is prone to swing about with movement of the vehicle. Some form of external damping can be used to improve upon this problem. Resistor R_1 is used to balance out the resistance of the tank sender. A good way to visualize the operation of the circuit is to note that when the tank is half full, the resistance of the sender will be the same as the resistance of R_1. This makes the circuit balanced and the gauge will read half full. The sender resistance is at a maximum when the tank is full.

Air Cored Gauges Air cored gauges work on the same principle as a compass needle lining up with a magnetic field. The needle of the display is attached to a very small permanent magnet. Three or more coils of wire are used and each produces a magnetic field. The magnet, and therefore the needle, will line up with the resultant of the three fields. The current flowing through each coil is the key to moving the needle position.

Gauge details

Gauge Operation You can use the principle of the air-cored gauge, along with the circuit, for use as a temperature indicator. The resistor on the left is used to limit maximum current, and the calibration resistor is used for calibration! The thermistor is the temperature sender. As the thermistor resistance increases, the current in all three coils will change. Current through C, which is one coil but wound in two parts, will be increased, but the current in coils A and B will decrease. As the resistance decreases, the opposite will occur, thus moving the needle from cold to hot.

Air-Cored Gauge Advantages The air-cored gauge has a number of advantages. It has almost instant response, and as the needle is held in a magnetic field, it will not move as the vehicle changes position. The gauge can be arranged to continue to register the last position even when switched off. If a small 'pull off' magnet is used, it will return to its zero position. A change in system voltage would affect the current flowing in all three coils. Variations are therefore cancelled out so a voltage stabilizer is not needed. The operation is similar to the moving iron gauge.

Other Gauges A variation of any of the above types of gauge can be used to display other required outputs such as voltage or oil pressure. Gauges to display road or engine speed, however, need to react very quickly to changes. Many systems now use a stepper motor or other type of electrical gauge for this purpose.

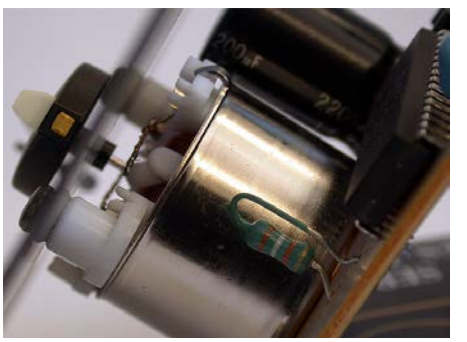
Stepper motor tachometer

Cable Speedometer Some cars still use conventional cable driven speedometers. The head units usually work by either friction or magnetism. The frictional or magnetic 'drag' increases as speed increases, and this is used to move a needle. The flexible cable is driven from the gearbox output. It has square ends to transfer the rotation.

Speedometer cable and head

Electronic Speedometer Shown here is a block diagram of a speedometer, which uses an ammeter as the gauge. This system uses a quenched oscillator sensor. This sensor produces a constant signal, even at very low speed. The frequency of the signal is proportional to road speed. The sensor is driven from the gearbox or a final drive output. The gauge will read an average of the pulses from the sensor. This average value is dependent on the frequency of the input signal, which in turn is dependent on vehicle speed. The odometer is driven by a stepper motor, which is driven by the output of a divider and an amplifier.

Rev-counter or Tachometer The system for driving most rev-counters is similar to the electronic speedometer system. Pulses from the ignition primary circuit are often used to drive the gauge. The rev-counter needle response is damped to give a steady reading.

Tachometer display

Summary A number of different gauges are used for instrumentation displays. The most common for fuel and temperature display are thermal, moving iron and air-cored. Speedometers and tachometers use stepper motors, electrical gauges or mechanical systems.

Explain the basic operation of a thermal gauge.

Read the previous section again and note down some key bullet points here:

-
-
-
-

Instrument Displays

Visual Displays The function of any visual display is to communicate information. Most displays used in a vehicle must provide instant data, but the accuracy is not necessarily important. Analogue displays provide almost instant feedback from one short glance. For example, if the needle of the temperature gauge is positioned in the middle, the driver can assume that the engine temperature is within suitable limits. A digital read-out of temperature such as 98^0C would not be as easy to interpret. This is why that when digital processing and display techniques are used; the read-out may still be in analogue form.

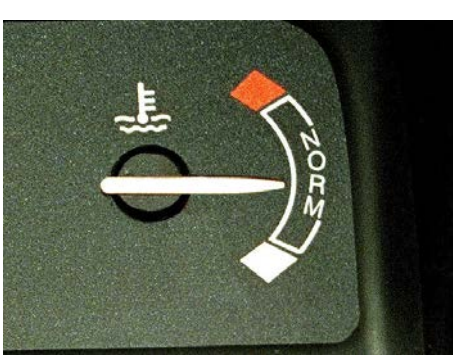

Analogue display

Display Types Numerical and other forms of display are used for many applications. Some of these are:

Vehicle map
Trip computer
Clock
Radio panel
Route finding screen
General instruments.

Digital display

These displays can be created in a number of ways. The most common use light emitting diodes, vacuum fluorescence, or liquid crystals. The following screens examine each of these in detail.

Light Emitting Diodes If the junction of a diode is manufactured from a special material, light will be emitted when a current is passed in the forward-biased direction. This is described as a light-emitting diode (LED). It will produce red, yellow or green light with slight changes in the manufacturing process. LEDs are used extensively as indicators on electronic equipment and in digital displays. They last for a very long time and draw only a small current.

LEDs

LED Arrangements LED displays are tending to be replaced for automobile use, by the liquid crystal type, which can be backlit to make it easier to read in the daylight. However, LEDs are still popular for many applications. The display will normally consist of a number of LEDs arranged into a suitable pattern for the required output. This can range from the standard seven-segment display to show numbers, to a custom designed display as shown here.

LED instruments

Liquid Crystal Displays 💻 Liquid crystals are substances that do not melt directly from the solid to the liquid phase. They first pass through a 'para-crystalline' stage in which the molecules are partially ordered. In this stage, a liquid crystal is a cloudy or translucent fluid. However, it still has some of the optical properties of a solid crystal.

Detailed Display Capability Mechanical stress, electric and magnetic fields, pressure, and temperature can alter the molecular structure of liquid crystals. A liquid crystal also scatters light that shines on it. Because of these properties, liquid crystals can be used to display letters and numbers on automobile instrument and other displays. LCDs are now used for portable computers and even television screens.

Liquid crystal display

Reflected Light An LCD display is achieved by only allowing polarized light to enter the liquid crystal, which as it passes through the crystal, is rotated by ninety degrees. The light then passes through a second polarizer, which is set at ninety degrees to the first. A mirror at the back of the arrangement reflects the light so that it returns through the polarizer, the crystal, and the front polarizer again. The net result is that light is simply reflected, but only when the liquid crystal is in this one particular state.

Display Operation When an ac voltage of about 10V at 50Hz is applied to the crystal, it becomes disorganized. The light passing through it is, therefore, no longer twisted by ninety degrees. This means that the light polarized by the first polarizer will not pass through the second, and will therefore not be reflected. This shows as a dark area on the display. These areas are constructed into suitable segments to provide whatever type of display is required. The size of each individual area can be very small; for example to form one pixel of a computer screen.

Liquid crystal radio/CD display

Back Lighting LCDs are very low power but do require a source of light to operate. To be able to read the display in the dark, some form of lighting is required. Instead of using a reflecting mirror at the back of the display, a source of light known as back lighting can be used. A condition known as DC electroluminescence is an ideal phenomenon. This uses a compound, which is placed between two electrodes, in much the same way as the liquid crystal, but it emits light when a voltage is applied.

Vacuum Fluorescent Display A vacuum fluorescent display (VFD) works in much the same way as a television tube and screen. It is becoming increasingly popular for vehicle use because it produces a bright light, which is adjustable. It produces a wider choice of colors than LED or LCD displays. The VFD system consists of three main components. These are the filaments, the grid, and the screen. Segments are placed appropriately for the intended use of the display. The filament forms the cathode, and the segments the anode of the main circuit. The control grid is used to control brightness.

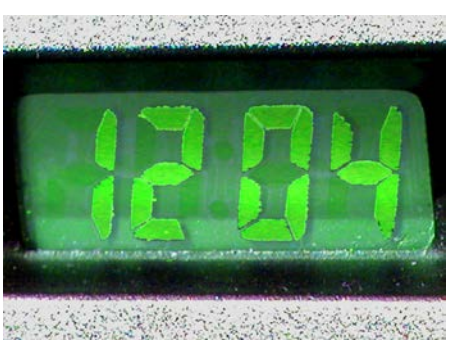
VFD in close up

Display Operation When a current is passed through the tungsten filaments, they become red hot and emit electrons. The whole unit is made to contain a vacuum so that the electrons are not affected by any outside influence. The segments are coated with a fluorescent substance and connected to a positive polarity control wire. When electrons strike the segments, they fluoresce emitting light. If the potential of the grid is changed, the number of electrons striking the segments changes, thus affecting the brightness.

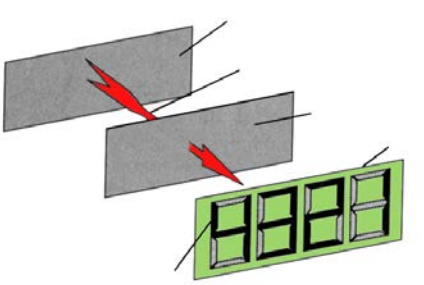
Principle of a VFD display

Control Circuit The circuit shown here is used to control a VFD. Note how the voltage of the segments, when activated, is above that of the grid. The electronic display controller connects one or more of the appropriate segments to a supply in order to produce the desired output. The glass front of the display can be colored to improve the readability and aesthetic value.

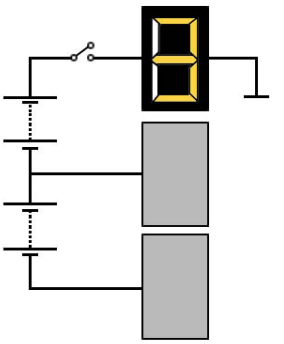

Brightness control

Head up Displays One of the main problems with any automobile instrument or monitoring display is that the driver has to look away from the road to see the information. In addition, if the driver does not look at the display, an important warning such as low oil pressure could be missed. Many techniques can be used, such as warning beepers or placing the instruments almost in view, but one of the most innovative is the head up display (HUD). This was originally developed by the aircraft industry for fighter pilots.

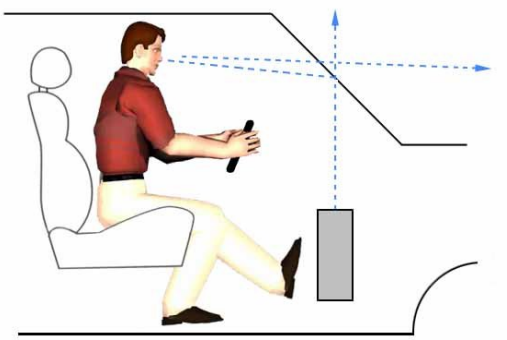

HUD in use

Principle of a Head up Display Information from a display device is directed onto a partially reflecting windshield. A great deal of data could be presented in this way. However, under normal circumstances, the driver would be able to see the road through the screen. The brightness of the display has to be adjusted to suit ambient lighting conditions. The main problem however, is what information to provide in this way. The speedometer could form part of a lower level display and a low oil pressure could cause a flash right in front of the driver.

Display Techniques Most of the discussion in previous sections has been related to the activation of an individual display device. The techniques used for, and the layout of, dashboard or display panels are very important. Largely, this comes back to readability. When so many techniques are available to the designer, it is tempting to use the most technologically advanced. However, this is not always the best!

Modern display

Summary The layout and the way that instruments are combined is an area in which much research has been carried out. This relates to the time it takes the driver to gain the information required when looking away from the road to glance at the instrument pack. Shown here is the instrument panel and other readout displays on the 'S-type' Jaguar. Note how compact it is, so that the information can be absorbed almost without the driver having to scan to each read-out in turn. The aesthetic looks of the dashboard are an important selling point for a vehicle.

Jaguar dashboard and instruments[2]

State the main function of any visual display.

State advantages and disadvantages of the different types of display.

Read the previous section again and note down some key bullet points here:

-
-
-
-
-

A Digital Instrumentation System

Introduction The block diagram shown here is typical of a digital instrumentation system. All signal conditioning and logic functions are carried out in the ECU. This will often form part of the dashboard assembly.

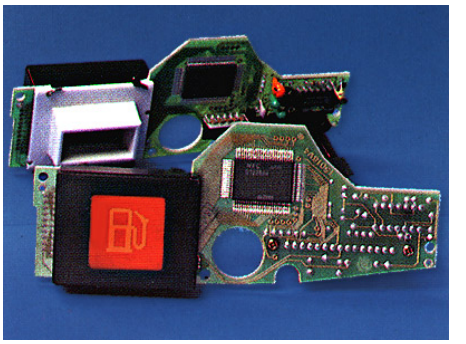

Instrument electronics (VDO)

Multiplexing Standard sensors provide information to the ECU via the multiplexer (MUX). The ECU contains a memory, which allows it to be programmed to a specific vehicle. The gauges used may be digital units or analogue, as described in the previous section. The gauges are driven in turn via the de-multiplexer (DeMUX).

Other System Functions Digital systems allow extra functions to be incorporated. For example, a low fuel warning light can be made to illuminate at a particular fuel tank sender unit resistance reading. A high engine temperature warning light can be made to operate at a set resistance of the thermistor.

Low fuel warning light

Readability To prevent the temperature gauge fluctuating as the cooling system thermostat operates, the gauge can be made to read only, at say, five set figures. For example, even if the input resistance varies from 240 to 200 ohms as the thermostat operates, the ECU will output just one reading corresponding to 'normal' on the gauge. If the resistance is much higher or lower, the gauge will be made to read at one of the five higher or lower positions. This technique gives a low-resolution reading but it is quick and easy for the driver to read.

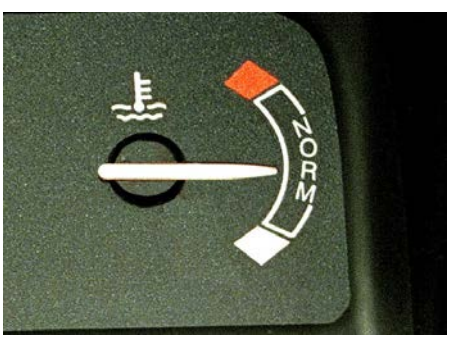

Temperature gauge reading normal

Flashing Lights Oil pressure or other warning lights can be made to flash. This is more likely to catch the driver's attention when a fault is serious. In general, only the oil pressure and high temperature warning lights would be important enough to flash. The lights could be distracting, but in these cases, the consequence of not stopping the engine could be serious.

Service Lights Service or inspection interval warning lights can be used. These warning lights are progressively lit over a period of time, to show when a service is due. This time period is known as the service interval. However, the service interval is reduced if the engine often experiences high speeds or high temperatures. Oil condition sensors are also now used to help determine service intervals.

Trip Computer Signals from the instrument ECU are supplied to the trip computer to provide information on fuel quantity and road speed. Alternatively, a signal from the trip computer may provide information on fuel usage to the instrument ECU!

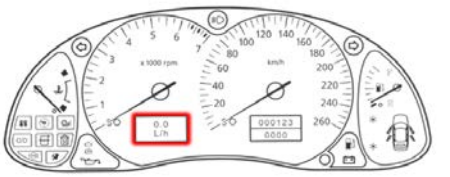

Trip display as part of the instrument panel[1]

Summary Many vehicles now use digital Instrument systems. However, the final displays may still be made up of conventional gauges. The main advantage of digital systems is that extra functions and facilities can be included. A good example would be the ability to switch between miles per hour and kilometers per hour readings.

Instrument display

State some of the extra functions that can be incorporated on a digital system.

Read the previous section again and note down some key bullet points here:

-
-
-
-
-

Vehicle Condition Monitoring and Trip Computers

Introduction Vehicle condition monitoring (VCM) is a form of instrumentation. It has now become difficult to separate it from the normal instrumentation system discussed in the first section. The complete VCM system can include driver information relating to a wide range of systems. Some of these are discussed on the following screens. Shown here is a typical display unit with a vehicle map.

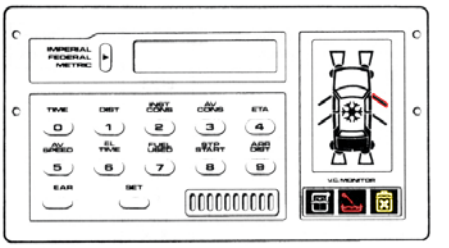

Display unit and vehicle map

Monitored Systems Systems which can be monitored include:

Bulb operation, by monitoring the current drawn by the lights.

Doors, bonnet or boot position, by signals from switches.

Brake pad wear by contact wires embedded in the friction material.

Fluid Levels Systems, which can be monitored for fluid level, include: fuel, brake fluid, coolant and the window washers. Many of these systems work by the action of a magnet on a reed switch. However, some manufacturers use different techniques so check their data.

Temperatures Temperatures monitored are the engine coolant and outside air. When a higher than normal engine coolant temperature is sensed a warning light is illuminated. When a low outside temperature is sensed a snowflake shaped warning light is lit! The sensors used are thermistors.

High temperature warning light

Bulb Failure Warning A circuit is shown here, which can be used to operate a bulb failure warning light. The principle is that the reed relay is only operated when the bulb being monitored draws current. The reed switch and coil may be described as a current relay.

Oil Level Oil level can be monitored by measuring the resistance of a heated wire on the end of a dipstick. A small current is passed through the wire to heat it. How much of the wire is covered by oil will determine its temperature and therefore its resistance.

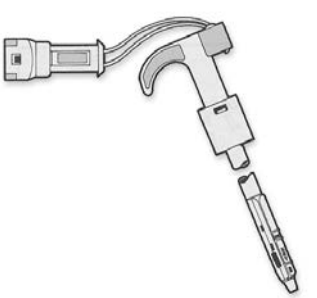

An electric dipstick[1]

Dual Resistance System Many of the circuits monitored use a dual resistance system, so that the circuit itself is also checked. Shown here is the equivalent circuit for this technique. The circuit will produce one of three possible outputs: high resistance, low resistance or an out of range reading. The high or low resistance readings are used to indicate correct fluid level and low fluid level. A figure outside these limits would indicate a circuit fault of either a short or an open circuit.

High/low resistance circuit

Vehicle Map Display The display for a vehicle map is often just a collection of LEDs or a back lit LCD. These are arranged into suitable patterns and shapes to represent the circuit or system being monitored. A door open will illuminate a symbol, which looks like the door of the vehicle map (plan view of the car). Low outside temperature or ice warning is often a large snowflake.

LEDs

Trip Computer Outputs The trip computer used on many top range vehicles is a popular accessory. The display of a typical trip computer is shown here. The basic functions available on most systems are:

Time and date
Elapsed time or a stop watch
Estimated time of arrival
Average fuel consumption
Range on remaining fuel

Trip distance.

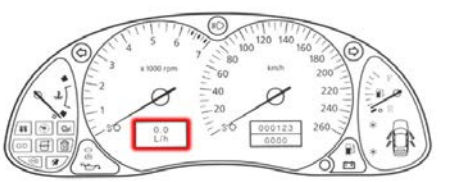

Trip display on the instrument panel[1]

Trip Computer Inputs The information can usually be displayed in Imperial, US, or metric units. In order to calculate the different outputs, the following inputs to the system are required:

Clock signal from an oscillator
Vehicle speed signal from a speed sensor or the instrumentation ECU
Fuel being used from the injector open time or a flow meter
Fuel remaining in the tank from the tank sender unit
Commands from the driver.

Trip keypad

Trip Computer System Shown here is a block diagram of a trip computer system. Other systems use the same inputs, and many of these systems 'communicate' with each other. This can make the overall wiring become very bulky and complicated. This type of interaction and commonality between systems has been the main reasons for the development of multiplexed wiring techniques.

Summary Vehicle condition monitoring systems and trip computers are becoming common on lower range cars. Monitoring a system, so that early warning of a problem can be given, is a significant contribution to safety. It is also important, therefore, to ensure that the monitoring systems are working correctly.

Explain why a reed switch and coil may be described as a current relay.

Read the previous section again and note down some key bullet points here:

-
-
-
-
-

Washers, Wipers and Heated Windows

Windshield Washers and Wipers The requirements of the wiper system are simple. The windshield must be clean enough to provide suitable visibility at all times. To do this the wiper system must meet the following requirements:

Efficient removal of water and snow

Efficient removal of dirt

Operate at temperatures from – minus 30 degrees Celsius to 800 degrees Celsius.

Pass the stall and snow-load test

Have a service life in the region of 1.5 million wipe cycles

Be resistant to corrosion from acid, alkali and ozone.

Wiper Blades Wiper blades are made of a rubber compound and are held against the window by a spring in the wiper arm. The aerodynamic property of the wiper blades has become increasingly important. The strip on top of the rubber element is often perforated to reduce air drag. A good quality blade will have a contact width of about 0.1mm. The lip wipes the surface of the window at an angle of about 45 degrees. The pressure of the blade on the window is also important.

Details of a wiper blade

Wiper Linkages Most wiper linkages consist of series or parallel mechanisms. Some older types use a flexible rack and wheel boxes similar to the operating mechanism of many sunroofs. One of the main considerations for the design of a wiper linkage is the point at which the blades must reverse. This is because of the high forces on the motor and linkage at this time. If the reverse point is set so that the linkage is at its maximum force transmission angle, then the reverse action of the blades puts less strain on the system. This also ensures smoother operation.

Wiper Motors All modern wiper motors are permanent magnet types. The drive is taken via a worm gear to increase torque and reduce speed. Three brushes may be used to allow two-speed operation. The normal speed operates through two brushes placed in the usual positions opposite to each other. For a fast speed, the third brush is placed closer to the ground brush. This reduces the number of armature windings between them, which reduces resistance, hence increasing current and therefore speed.

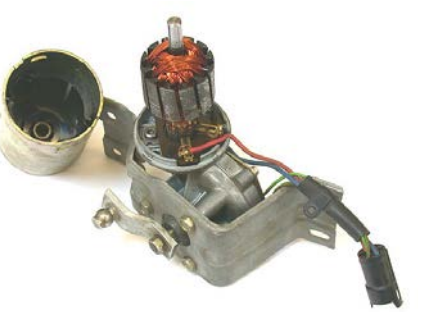

Motor brushes and armature

Circuit Protection Wiper motors or the associated circuit must have some kind of short-circuit protection. This is to protect the motor in the event of stalling, (if frozen to the window, for example). A thermal trip of some type is often used or a current-sensing circuit in the wiper ECU, if fitted.

Wipers frozen on the screen

Windshield Washers The windshield washer system consists of a simple DC permanent-magnet motor, which drives a centrifugal water pump. The water, preferably with a cleaning additive, is directed onto an appropriate part of the window by two or more jets. A non-return valve is often fitted in the line to the jets to prevent water from siphoning back to the tank. This also allows instant operation when the washer button is pressed. The washer circuit is normally linked to the wiper circuit. This is so that when the washers are operated, the wipers start automatically and continue, for several more sweeps, after the washers have stopped.

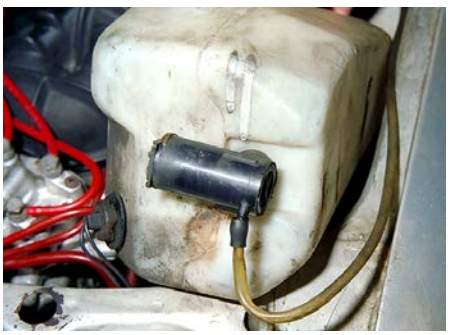

Washer motor

Washer and Wiper Circuits A circuit for fast, slow and intermittent wiper control is shown here. The switches are shown in the 'off' position, and the motor is stopped and in its park position. Note that the two main brushes of the motor are connected via the limit switch, delay unit contacts and the wiper switch. This causes regenerative braking because of the current, generated by the motor due to its momentum, after the power is switched off. Being connected to a very low resistance loads up the motor/generator and, when the park-limit switch closes, it stops instantly.

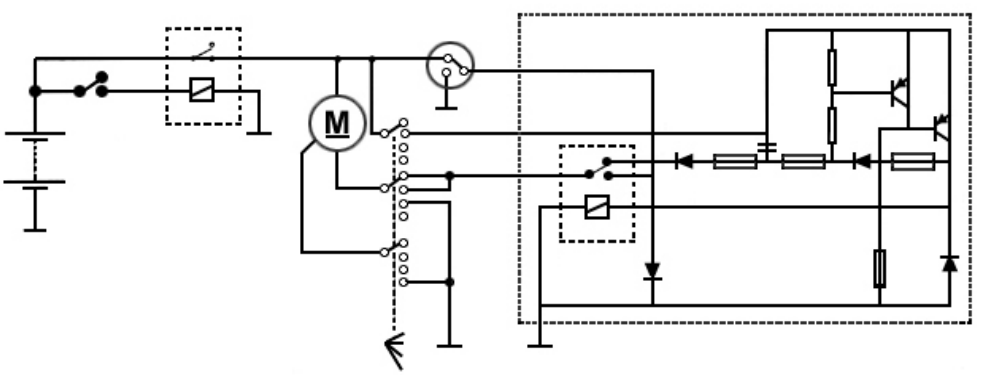

Wiper circuit

Operation of the Circuit When either the delay contacts or the main switch contacts are operated, the motor will run at slow speed. When fast speed is selected, the third brush on the motor is used. Once switched off, the motor will continue to run until the park-limit switch changes over to the position shown. This switch is only in the position shown when the blades are in the parked position.

Central Control Units Some vehicles use a system with more enhanced features. These systems are controlled by what may be known as a central-control unit (CCU), a multi-function unit (MFU), or a general electronic module (GEM)! These units often control other systems as well as the wipers, thus allowing reduced wiring bulk under the dash area. Electric windows, headlights and heated rear windows (to name just a few) are now often controlled by a central unit.

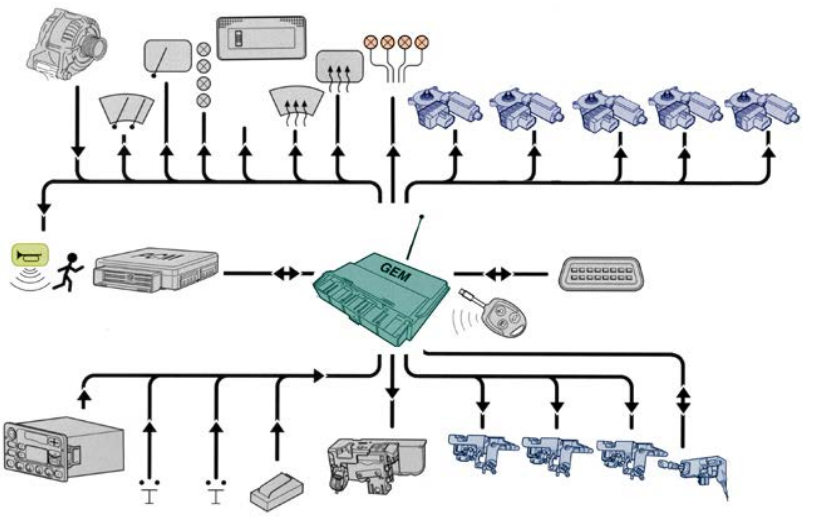

Ford GEM and components[1]

Electronically Controlled Features Using electronic control, a CCU allows the following features for the wipers:

Front and rear wash/wipe

Intermittent wipe time delay set by the driver

Reverse gear selection rear wipe

Rear wash/wipe with 'dribble wipe'

Stall protection.

Front wipers

Rear wiper

Wiper Blade Pressure Control A system called wiper pressure control can infinitely vary the pressure of the blade onto the screen, depending on vehicle speed. At high speeds, the air stream can cause the blades to lift and judder. This seriously reduces the cleaning effectiveness. If the original pressure is set to compensate, the pressure at rest could deform the arms and blades. Sensors are used to determine the air stream velocity and intensity of the rain. An ECU then evaluates the data from these sensors and passes an appropriate signal to a servomotor. When the blades are in the rest position pressure is very low to avoid damage. The pressure rises with increasing vehicle speed and heavy rain.

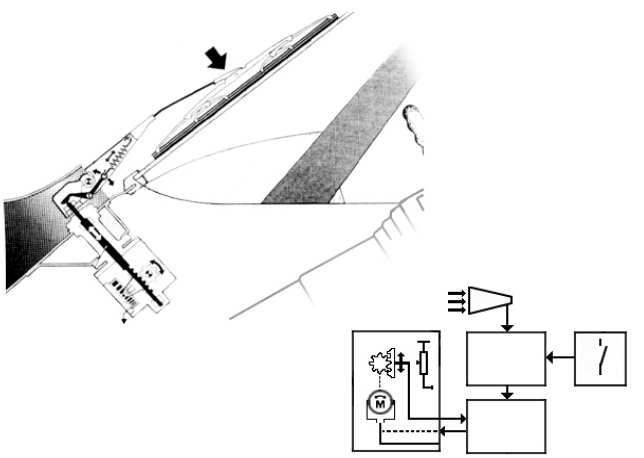
Bosch pressure control system[4]

Linear Rear Wipers Current wiper systems are based on an alternative rotary movement. This covers a wipe area of between 50 percent and 60 percent of the total surface area of the rear window. This limit is due to the height/width ratio and the curve of the window. The linear rear-wiper concept ensures optimum visual comfort as it covers over 80 percent of the rear window surface. This improves driver visibility by more than 60 percent. This increase in the driver's field of vision enhances safety, especially during low speed maneuvers such as backing or parking.

Valeo's linear rear wiper system

Rear Window Heating Heating of the rear window involves a circuit with a relay, which will usually incorporate a timer. The heating elements are thin metallic strips bonded to or built inside the glass. When a current is passed through the elements, heat is generated and the window will defrost or defog.

Rear screen heater elements

Windshield Heating Front windshield heating is used on some vehicles. This presents more problems than the rear window, as vision must not be obscured. The technology used is drawn from the aircraft industry; it involves very thin wires cast into the glass. As with the heated rear window, this device can consume a large current and uses a timer relay.

Front screen heater elements

High Current Window heaters can draw a high current, with 10 to 15 amps being typical. Because of this, the circuits often contain timer relays to prevent the heaters from being left on too long. The timer will switch off after 10 to 15 minutes.

Timer relay

Describe how a wiper motor achieves slow and fast speeds.

Read the previous section again and note down some key bullet points here:

-
-
-
-
-

Horns, Obstacle Avoidance and Cruise Control

Electric Horns Regulations in most countries state that the horn (or audible warning device) should produce a uniform sound. Most horns require a large current, so they are switched by a relay.

Horn Circuit The standard horn operates by simple electromagnetic switching. Current flow causes an armature, which is attached to a tone disc, to be attracted to a stop. A set of contacts is then opened. This disconnects the current allowing the armature and disc to return under spring tension. The whole process keeps repeating when the horn switch is on. The frequency of movement, and hence the tone, is between 1.8 and 3.5 kHz. This range allows the horn to be heard above standard traffic noise.

Horn operation circuit

Twin Horns Twin horn systems, which have a high- and low-tone horn, are often used. These produces a more pleasing sound but are still audible during all driving conditions.

Horns removed from vehicle

Obstacle- Avoidance Radar This system (sometimes called collision- avoidance radar) can be looked at in two ways. First, it helps when backing up because it gives the driver some indication as to how much space is behind the car. Second, collision- avoidance radar can be used as a vision-enhancement system. Obstacle-avoidance radar, when used as a vision enhancement, is somewhat different. The block diagram shown here demonstrates the principle of this system. In the future, this may be linked with adaptive cruise control.

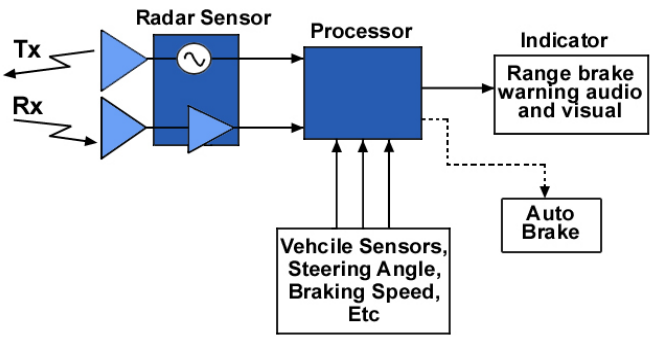

System block diagram

Backing Aid The principle of radar as a backing aid is illustrated here. This technique is in effect a range-finding system. The output can be audio or visual, the latter being perhaps most appropriate since the driver is likely to be looking backward. The audible signal is a 'pip, pip, pip'-type sound. The repetition frequency increases, as the car gets closer to an obstruction and becoming almost continuous as near impact. The technique is relatively simple as the level of discrimination required is low and the radar only has to operate over short distances. The main problem is to ensure the whole width of the vehicle is protected.

Ultrasonic reversing aid[4]

Cruise Control Cruise control is an ideal example of a closed-loop control system. The purpose of cruise control is to allow the driver to set the vehicle speed and let the system maintain it automatically.

Speed Control The system reacts to the measured speed of the vehicle and adjusts the throttle accordingly. The reaction time is important so that the vehicle's speed does seem to be surging up and down. Other features are available. One such feature allows the speed to be gradually increased or decreased at the touch of a button. Most systems also remember the last set speed. They will return to this speed at the touch of a button.

Throttle controller

System Description The main switch turns on the cruise control, which is ignition controlled. Most systems do not retain the speed setting in memory when the main switch has been turned off. Operating the 'set' switch programs the memory. However, this will only work if conditions similar to the following are met:

Cruise control switch positions

Vehicle speed is greater than 40km/h

Vehicle speed is less than 12km/h

Change of speed is less than 8km/h/s

Automatics must be in ''drive'

Brakes or clutch are not being operated

Engine speed is stable.

Set and Resume Once the system is set, the speed is maintained to within about 3-4 km/h until it is deactivated by pressing the brake or clutch pedal, pressing the ''resume' switch or turning off the main control switch. The last 'set' speed is retained in memory except when the main switch is turned off. If the cruise-control system is activated again, then either the 'set' button will hold the vehicle at its current speed or the ''resume' button will accelerate the vehicle to the previous 'set' speed. When cruising at a set speed, the driver can press and hold the ''set' button to accelerate the vehicle until the desired speed is reached. If the driver accelerates from the set speed – when passing another vehicle, for example – then when the throttle is released, the vehicle will slow down again.

Cruise control switches[1]

Control Methods A number of methods are used to control the throttle position. Vehicles fitted with drive-by-wire systems allow the cruise control to operate the same actuator. A motor can be used to control the throttle cable or, in many cases, a vacuum operated diaphragm is used. In this case, three simple valves control throttle movement.

Throttle motor

Vacuum Actuator When the speed needs to be increased, valve 'X' is opened, allowing low pressure from the inlet manifold to one side of the diaphragm. The atmospheric pressure on the other side will move the diaphragm and hence the throttle. To move the other way, valve 'X' is closed and valve 'Y' is opened, allowing atmospheric pressure to enter the chamber. The spring moves the diaphragm back. If both valves are closed, then the throttle position is held. Valve 'X' is normally closed and valve 'Y' normally open. In the event of electrical failure, cruise will not remain engaged and the manifold vacuum is not disturbed. Valve 'Z' provides extra safety; it is controlled by the brake and clutch pedals.

Safety Switches The brake switch is very important because braking would be dangerous if the cruise-control system was still trying to maintain the vehicle speed. This switch is normally of superior quality and is fitted in place or as a supplement to the brake-light switch activated by the brake pedal. Adjustment of this switch is important. The clutch switch is fitted in a similar manner to the brake switch. It deactivates the cruise system to prevent the engine speed from increasing if the clutch is pressed. The automatic gearbox switch will only allow the cruise to be engaged when it is in the ''drive' position. This is to prevent the engine from over speeding if the cruise tried to accelerate to a high road speed with the gear selector in position '1' or '2.'

Cruise control system development[2]

Speed Sensor This will often be the same sensor that is used for the speedometer. If not, several types are available, the most common producing a pulsed signal with a frequency proportional to the vehicle speed.

Road speed sensor

Adaptive Cruise Control Conventional cruise control has now developed to a high degree of quality. It is, however, not always very practical on many roads as the speed of the general traffic is constantly varying, and often very heavy. The driver has to take over from the cruise control system on many occasions to speed up or slow down. Adaptive cruise control can automatically adjust the vehicle speed to the current traffic situation. The system has three main aims:

Maintain a speed as set by the driver
Adapt this speed and maintain a safe distance from the vehicles in front

Provide a warning if there is a risk of collision.

System Operation The operation of an adaptive cruise system is similar to a conventional system. However, when a signal from the headway sensor detects an obstruction, the vehicle speed is decreased. If the optimum stopping distance cannot be achieved by just backing off the throttle, the driver is warned. The more complex system can take control of the vehicle transmission and brakes.

Headway sensor[4]

State why many vehicles use a twin horn system.

Read the previous section again and note down some key bullet points here:

-
-
-
-
-

Seats, Mirrors, Sunroofs and Central Locking

Introduction Electrical movement of seats, mirrors and the sunroof are included in one section because the operation of each system is quite similar. The operation of electric windows and central door locking is also much the same. Fundamentally, all of the systems discussed in this section operate using one or several permanent magnet motors, together with a supply reversing circuit.

Mirrors

Seats[2]

Reverse Circuit A typical motor's reverse circuit is shown here. When the switch is moved, one of the relays operates and changes the polarity to **one** side of the motor. If the switch is moved the other way then the polarity of the other side of the motor is changed. When at rest, both sides of the motor are at the same potential. This has the effect of regenerative braking so that when the motor stops it will do so instantly. Further refinements are used to enhance the operation of these systems. Limit switching, position memory and force limitation are the most common.

Electric Seat Adjustment Adjustment of the seat is achieved by using a number of motors to allow positioning of different parts of the seat. Movement is possible in the following ways:

Front to rear

Cushion height rear

Cushion height front

Backrest tilt

Headrest height

Lumber support

Electrically Controlled Seat A typical electrically controlled seat is shown here. This system uses four positioning motors and one smaller motor to operate a pump, which controls the lumber support bag. Each motor is operated by a simple rocker type switch that controls two relays as described previously. Nine relays are required for this, two for each motor and one to control the main supply.

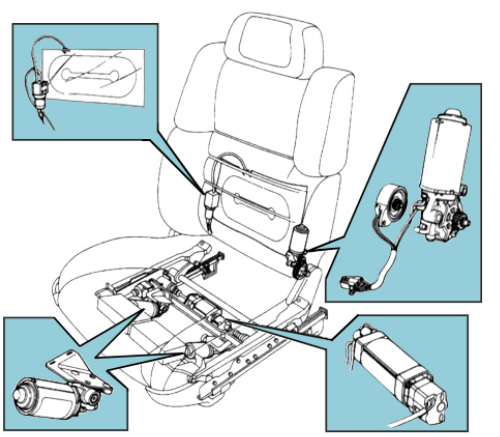

Seat motors in position

Seat Position Once seat position has been set, some vehicles have memories to allow automatic re-positioning once the seat has been moved again. This is often combined with electric mirror adjustment. The circuit here is constructed to allow position memory. As the seat is moved, a variable resistor, mechanically linked to the motor, is also moved. The resistance value provides feedback to an electronic control unit (ECU). The facility to reposition seats automatically is isolated when the engine is running or the car moving. This is to prevent the seat from moving into a dangerous position as the car is being driven. The seats can still be adjusted by operating the switches as normal.

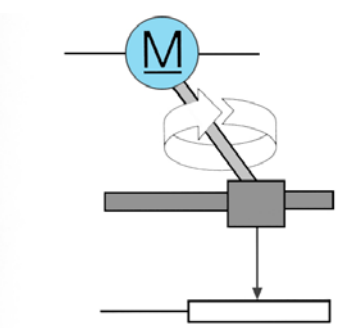

Position memory

Electric Mirrors Many vehicles allow electrical adjustment of mirrors, particularly on the passenger side. The system is much the same as that used for seat movement. Two small motors are used to move the mirror vertically or horizontally. Many mirrors also contain a small heating element on the rear of the glass. This is operated for a few minutes when the ignition is first switched on. The circuit shown here includes feedback resistors for position memory.

Mirror switch

Mirror motors

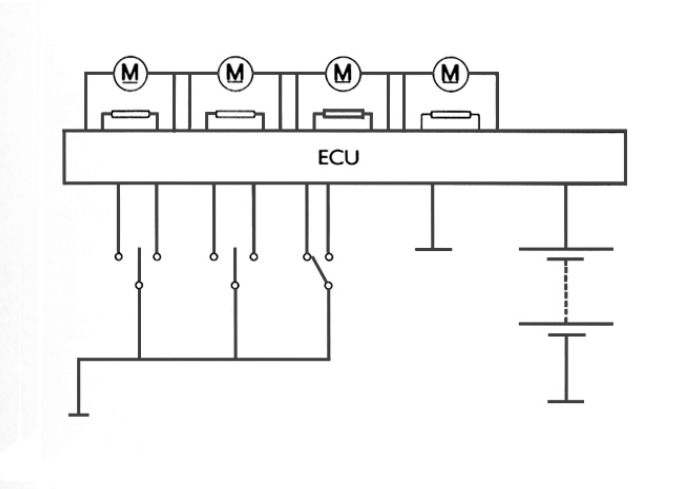

Mirrors circuit

Electric Sunroof Operation The operation of an electric sunroof is once again based on a motor reverse circuit. However, further components and circuitry are needed to allow the roof to slide, tilt and stop in the closed position. The extra components used are a micro switch and a latching relay. A latching relay works in much the same way as a normal relay except that it locks into position each time it is energized. The mechanism used to achieve this is much like that used in ballpoint pens that have a button on top.

Sunroof[2]

Latching Relay The micro switch is mechanically positioned to operate when the roof is in its closed position. A rocker switch allows the driver to adjust the roof. The switch provides a supply to the motor to run it in the chosen direction. The roof will open or tilt. When the switch is operated, to close the roof, the motor is run in the appropriate direction until the micro switch closes (when the roof is in its closed position). This causes the latching relay to change over, which stops the motor. The control switch has now to be released. If the switch is pressed again, the latching relay will once more change over and the motor will be allowed to run.

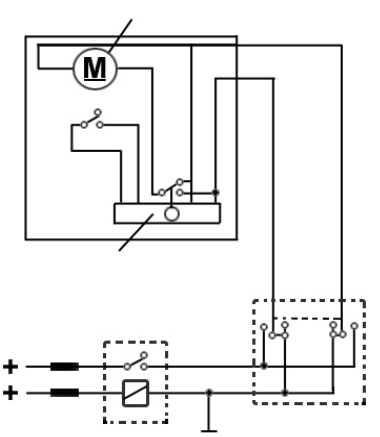

Sunroof circuit

Central Locking When the key is turned in the driver's door lock, all of the other doors on the vehicle should also lock. Motors or solenoids in each door are what allow this to work. If the system can only be operated from the driver's door key, then an actuator is not required in this door. If the system can be operated from either front door or by remote control, then all of the doors need an actuator. On vehicles with built-in alarm systems, all doors lock when the alarm is set.

Remote door locking

Door Locking Circuit A locking circuit for a door is shown here. The main control unit contains two changeover relays (reverse circuit), which are activated by either the door lock switch, or if fitted, the remote key. The motors for each door lock are wired in parallel, and all operate at the same time.

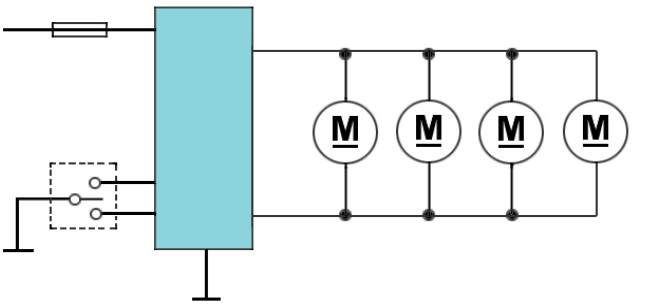

Circuit to operate door locks

Actuators Most door actuators are small motors. Via suitable gear reduction, they operate a linear rod in either direction to lock or unlock the doors. A simple motor reverse circuit is used to achieve the required action.

Door lock actuator

Remote Control Infrared or microwave central door locking is controlled by a small handheld transmitter and a sensor receiver unit. When the key is operated, by pressing a small switch, a complex code is transmitted. Trillions of different code combinations are used on modern systems. The car's sensor picks up this code and sends it in an electrical form to the main control unit. If the received code is correct, the relays are triggered and the door locks are either locked or unlocked. If an incorrect code is received on three consecutive tries when attempting to unlock the doors, then some systems will switch off until the door is opened by the key. This technique prevents a scanning-type transmitter unit from being used to open the doors.

Key transmitter

Electric Window Operation The basic form of electric window operation is similar to many of the systems discussed so far in this module. A motor reversing system either by relays or directly by a switch. More sophisticated systems are now popular because they improve safety and comfort. The following features are available from many manufacturers:

Electric window controls

One-touch up or down

Inch up or down

Lazy lock

Back off or bounce back.

System Diagram The complete system consists of an electronic control unit containing the window motor relays, switch packs and a link to the door lock and sunroof circuits. This is represented here in the form of a block diagram.

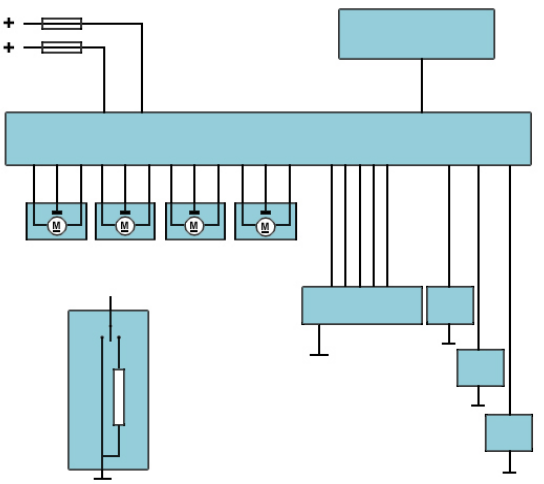
Electric window system block diagram

'Bounce Back' When a window is operated in 'one touch' mode, the window is driven in the chosen direction until the switch position is reversed, the motor stalls or until the ECU receives a signal from the door lock circuit. The problem with one-touch operation is that if a child, for example, should become trapped in the window, there is a serious risk of injury. To prevent this, a bounce-back feature is used. An extra commutator is fitted to the motor armature. This produces a signal, via two brushes, proportional to the motor speed. Hall sensors are used on some systems. If the motor's speed change rate is detected as being below a certain threshold, the ECU reverses the motor until the window is fully open.

Window Position By counting the number of pulses received, the ECU can also determine the window position. This is important, as the window must not reverse when it stalls in the closed position. For the ECU to know the window position, it must be initialized. This is often done simply by operating the motor to first fully open the window and then to fully close it. If this is not done then the one-touch feature and bounce-back will not operate.

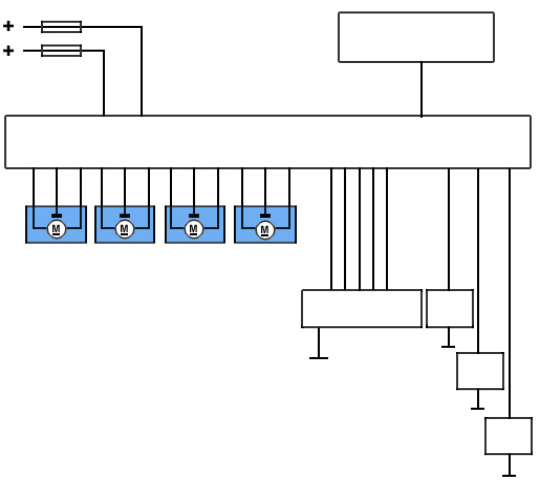
Motor sensor

Lazy Lock A 'lazy lock' feature allows the car to be fully secured by one operation of a remote key. This is done by linking the door lock ECU and the window and sunroof ECUs. A signal is supplied and causes all of the windows to close in turn, then the sunroof and finally locks the doors. The alarm will also be set if required. The windows close in turn to prevent the excessive current demand, which would occur if they all tried to operate at the same time.

Electric Window Circuit A circuit for electric windows is shown here. Note the connections to other systems such as door locking and the rear window isolation switch. This is commonly fitted to allow the driver to prevent rear window operation (for child safety reasons, for example).

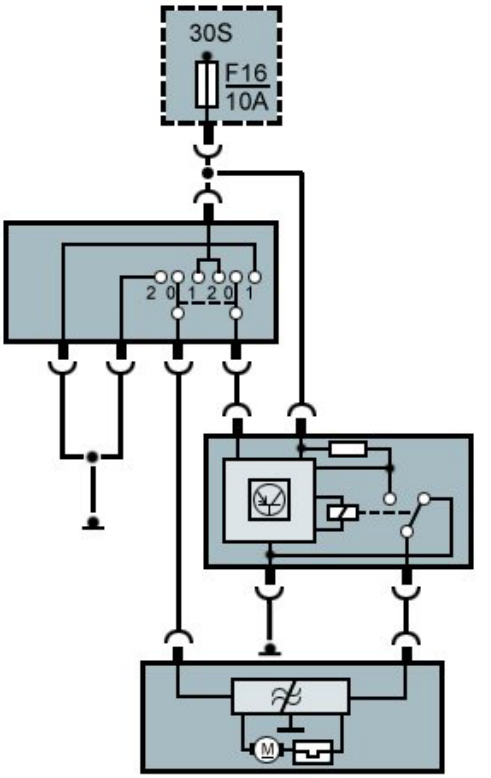

Circuit for electric windows[1]

Motor A typical window motor used for cable- or arm-lift systems is shown here. Most motors are permanent magnet types and drive through a worm gear. This reduces speed and greatly increases the torque.

Electric window lift motor

Summary All of the systems examined in this section are based on motor reverse circuits. Door locks, windows, sunroofs, mirrors and seats all operate in this way. Most of the systems are designed to improve driver and passenger comfort.

Electric systems improve comfort[2]

Describe the basic operation of a motor reverse circuit.

State FOUR features of a sophisticated electric window system.

Read the previous section again and note down some key bullet points here:

-
-
-
-
-

Mobile Multimedia

In-Car Entertainment (ICE) Controls on most sets will include volume, treble, bass, balance and fade. Cassette tape options will include Dolby® filters to reduce hiss and other tape selections such as chrome or metal. A digital display, of course, will provide a visual output of operating condition. This is also linked into the vehicle lighting to prevent glare at night. Track selection and programming for one or several compact discs is also offered.

Anti Theft Codes Many ICE systems are coded to deter theft. The code is activated if the electrical supply is disconnected and will not allow the set to work until the correct code has been re-entered. Some systems now include a plug-in electronic 'key card,' which makes the set worthless when removed.

Removable control panel

In-Car Multimedia It would be almost unthinkable to not have radio-cassette players in our vehicles. Not long ago they were considered optional! A modern, factory-installed ICE system with a CD player is shown here.

CD and radio

Hi-Fi Quality In-car entertainment (ICE) systems fitted to standard production cars are now of good hi-fi quality. Popular features include compact disc players and multiple compact disc changers together with automatic station search and re-tune.

Speakers Good ICE systems include at least six speakers, two larger speakers in the rear to produce good low-frequency reproduction, two front-door speakers for mid-range and two front-door tweeters for high-frequency notes.

Pioneer sub-woofer speaker.

Speaker Construction Speakers are a very important part of a sound system. No matter how good the receiver or CD player is, the sound quality will be reduced if inferior speakers are used. Equally, if the speakers are of a lower power-output rating than the set, distortion will result at best and damage to the speakers at worst. Speakers fall into the following categories:

Tweeters - high-frequency reproduction

Mid-range - middle-range frequency reproduction (treble)

Woofers - low-frequency reproduction (bass)

Sub-woofers - very-low-frequency reproduction.

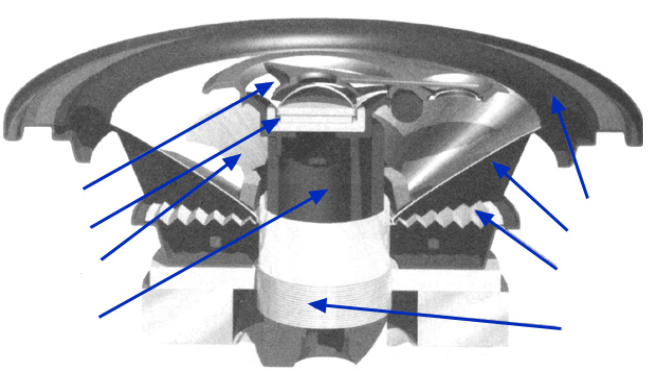
Construction of a speaker

Radio Data System (RDS) RDS has become standard on many radio sets. It is an extra, inaudible digital signal, which is sent with FM broadcasts in a similar way to how text is sent with TV signals. RDS provides information so a receiver can appear to act intelligently. The possibilities available when RDS is used are:

The station name can be displayed in place of the frequency
Automatic tuning to the best available signal for the chosen radio station

Traffic information and news broadcasts can be identified and a setting made so that whatever you are listening to at the time can be interrupted.

RDS display

Radio Reception 💻 There are two main types of radio signal transmitted: amplitude modulation (AM) and frequency modulation (FM). FM is generally a better source of high-fidelity sound. This is because the quality of AM reception is limited by the narrow bandwidth of the signal. However, FM does present problems with reception when the vehicle is moving. Most vehicles use a rod aerial, which is omni-directional and will receive signals from all directions. Because of this, reflections from buildings, hills and other vehicles can reach the set – all at the same time. This can distort the signal.

Digital Audio Broadcast (DAB) Digital-audio broadcasting is designed to provide high-quality digital radio broadcasting for reception by stationary and mobile receivers. It is being designed to operate at any frequency up to 3GHz. The system uses digital techniques to remove redundancy and perceptually irrelevant information from the audio source signal. All transmitted information is then spread in both the frequency and the time domains (multiplexed) so a high quality signal is obtained in the receiver, even under poor conditions.

Digital broadcast radio set[4]

Auto PC A revolution in the use of information technology in vehicles is taking place. Advanced computing, communications and positioning developments are being introduced in even the most basic vehicles. Shown here is an 'Auto PC'/'Car Multimedia' system. Many leading computer companies, including Microsoft, IBM, and Intel, have identified the vehicle as their next big marketplace. Plans have been announced for in-vehicle computers with a range of integrated functions. Microsoft's Auto PC, for example, uses a cut-down version of the standard Windows operating system.

In car MP3Player[4]

Functions The Auto PC will be able to run familiar desktop programs while also offering the following:

Spoken turn-by-turn navigation
Digital map database of useful sites, such as gas stations and movie theaters
Voice memo system
Vehicle diagnostics program
Vehicle security and tracking system
Emergency roadside-assistance service

High-performance stereo system capable of playing CDs and receiving FM radio.

Navigation display[2]

Mobile Communication Tying the computer in with the mobile communication system opens up even more possibilities. Cellular phone systems can provide an excellent means of tracking vehicles. Phone operators divide the country into separate cells and monitor phones as they move between them to ensure that each phone communicates through the best transmitter. Mobile communication systems will have a profound impact on how vehicles are used. Development work is under way on the exchange of information between vehicles and the road infrastructure.

Cell Phones The first car telephones, which were so large, had the main unit fitted in the car's trunk! If the success of the cellular industry is any indication of how much use we can make of the telephone, the future promises an even greater expansion. Cellular technology, which became useful in the 1980s, has continued to develop. In vehicle communication equipment for normal business and personal use, will be by the simple pocket sized cell phone and there is no further market for the car telephone. Hands-free conversions will still be important.

Cell phones are everywhere

ICE System Circuit The circuit of a typical ICE system is shown here. An electric aerial is included as is the connection to a multi-compact disc unit via a data bus. The permanent supply is to keep memories alive

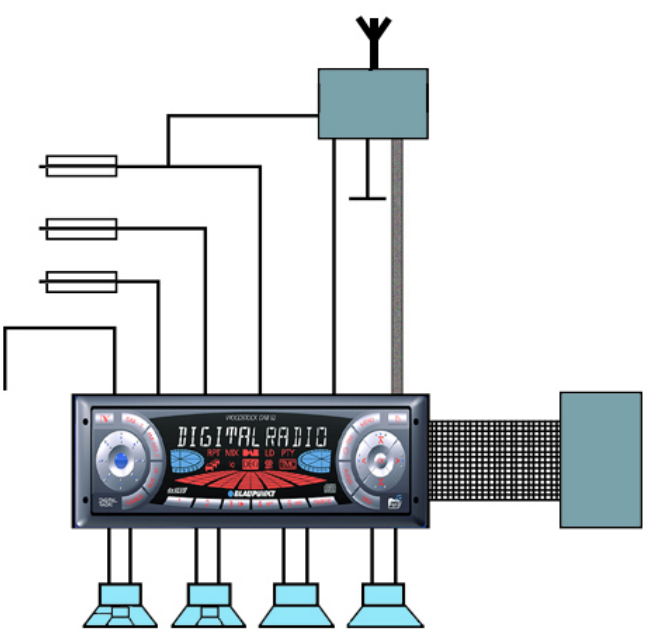

Circuit for an ICE system

State the TWO main types of radio signal transmitted.

List FIVE possible functions of an Auto PC

Read the previous section again and note down some key bullet points here:

-
-
-
-
-

Security Systems

Security Stolen cars and theft from cars account for about a quarter of all reported crime. A huge number of cars are reported missing each year and more than 20 percent are never recovered. Even when returned, many are damaged. Most car thieves are opportunists and even a basic alarm system serves as a deterrent in this case.

Alarm Sensors Car and alarm manufacturers are constantly fighting to improve security. Building the alarm system as an integral part of the vehicle electronics has made significant improvements. Even so, retrofit systems can still be very effective. Three main types of intruder alarm are used:

Switch operated on all entry points
Trembler operated
Battery voltage sensed

Volumetric sensing.

Alarm switch-type sensor

Disabling the Vehicle There are four main ways to disable the vehicle:

Ignition-circuit cutoff
Fuel-system cutoff
Starter-circuit cutoff
Engine ECU code lock

A separate switch or transmitter can be used to set an alarm system. Often, it is set automatically when the doors are locked.

Ignition

Fuel

Starter

ECU

Security System The following is an overview of good alarm systems now available as either a retro fit or factory-installed. Most are made for 12V, negative-ground vehicles. They have electronic sirens and give an audible signal when arming and disarming. They are all triggered when the car doors open and will automatically reset after a period of time, often 1 or 2 minutes. The alarms are triggered instantly when entry point is breached. Most systems are two pieces, with a separate control unit and siren. Most will have the control unit in the passenger compartment and the siren under the hood.

Remote Operation Most systems now come with remote 'keys' that use small button-type batteries and have an LED that shows when the signal is being sent; they operate with one vehicle only. Intrusion sensors such as car movement and volumetric sensing can be adjusted for sensitivity. When operating with flashing lights, most systems draw about 5A. Without flashing lights (siren only), the current draw is less than 1A. The sirens produce a sound level of about 95dB, when measured 2m in front of the vehicle.

Inside a remote key

Alarm System A block diagram of a complex alarm system is shown here. The system can be considered as a series of inputs and outputs.

Factory Fitted Alarms Most factory–installed alarms are combined with the central door locking system. This allows the feature mentioned in a previous section known as 'lazy lock.' Pressing the button on the remote unit, and as well as setting the alarm, the windows and sunroof close, and the doors lock.

Security Coded ECUs A security code in the engine electronic-control unit is a powerful deterrent. This can only be unlocked to allow the engine to start when it receives a coded signal. Ford and other manufacturers use a special ignition key, which is programmed with the required information. Even the correct ''cut' key will not start the engine. Citroen, for example, has used a similar idea but the code has to be entered via a numerical keypad.

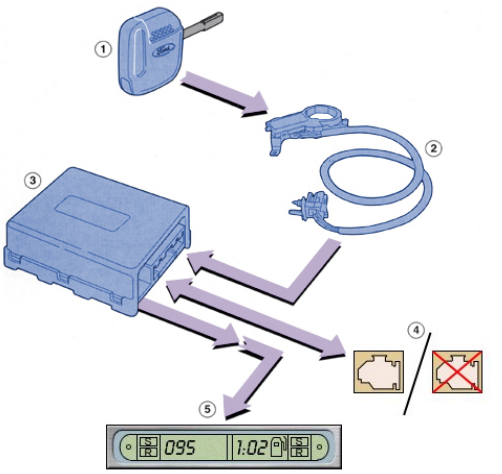

Coded key[1]

State FOUR ways an alarm system can disable a vehicle.

Read the previous section again and note down some key bullet points here:

-
-
-
-
-

Safety Systems

Passive and Active Safety Active safety relates to any development designed to actively avoid accidents. It can be considered under four general headings: handling safety, physiological safety, perceptual safety and operational safety. Passive safety relates to developments that protect the occupants of the vehicle in the event of an accident. Air bags are a good example of this.

Passive safety is only used in an emergency[2]

Air Bags and Belt Tensioners A seat belt, seat belt tensioner and an air bag are currently the most effective restraint system in the event of a serious accident. At speeds in excess of 40km/h, the seat belt alone is no longer adequate. Research after a number of accidents has determined that in 68 percent of cases an air bag provides a significant improvement. It has been suggested that if all cars in the world were fitted with air bags the number of fatalities annually would be reduced by well over 50,000. Some air-bag safety concerns have been raised in the United States where air bags are larger and more powerful than in many other parts of the world.

Air bags[2]

Steering Wheel Unit Air-bag systems in which most of the required components are built into one unit are becoming the most popular. This reduces the amount of wiring and connections, thus improving reliability. With this type of system, some form of system monitoring must be built in because operation cannot be tested.

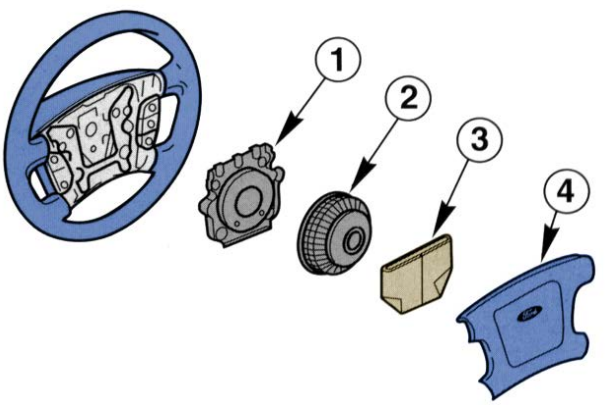

Air bag unit[1]

Operation of the System The sequence of events in the case of a frontal collision at about 35km/h, is as follows:

Air bag position

Driver in normal seating position prior to impact. About 15ms after the impact, the vehicle is strongly decelerated and the threshold for triggering the air bag is reached. The igniter ignites the fuel tablets in the inflater.

After about 30ms, the air bag unfolds and the driver will have moved forward as the vehicle's crumple zones collapse. The seat belt will have locked or been tensioned, depending on the system.

At40ms after impact, the air bag will be fully inflated and the driver's momentum will be absorbed by the air bag.

About 120ms after impact, the driver will be moved back into the seat and the air bag will have almost deflated through the side vents allowing driver visibility.

Passenger Air Bags Passenger air bag deployment events are similar to the previous description. The position is different, but the basic principle of operation is the same.

Side air bag position

Rear air bag position

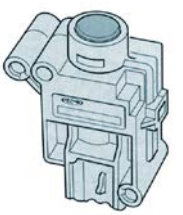
Crash sensor[1]

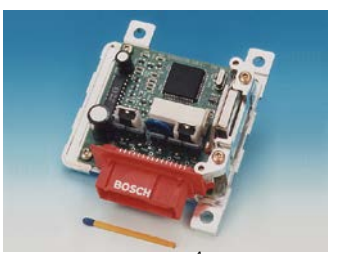

Electronic control unit[4]

Components and Circuit The main components of a basic air-bag system are as follows:

Driver and passenger air bags

Warning light

Passenger seat switches

Pyrotechnic inflater

Igniter

Crash sensor(s)

Electronic control unit

Air Bag The air bag is made of a nylon fabric with a coating on the inside. Prior to inflation, the air bag is folded up under suitable padding, which has specially designed break lines built in. Holes are provided in the side of the air bag to allow rapid deflation after deployment. The driver's air bag has a volume of about 60 liters and the passenger air bag about 160 liters.

Air bags operating[2]

Seat Switches A warning light is used as part of the system's monitoring circuit. This gives an indication of a potential malfunction and is an important part of the circuit. Seat switches are used on the passenger side to prevent deployment when not occupied.

Warning light

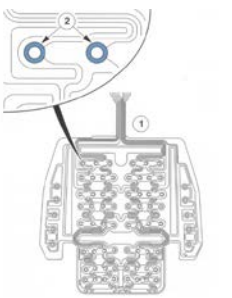

Seat switch[1]

Pyrotechnic Inflater The pyrotechnic inflater and the igniter can be considered together. On the driver side, the inflater is located in the center of the steering wheel. It contains a number of fuel tablets in a combustion chamber. The igniter consists of charged capacitors, which produce the ignition spark. The fuel tablets burn very rapidly and produce a given quantity of nitrogen gas at a given pressure. This gas is forced into the air bag through a filter and the bag inflates, breaking through the padding in the wheel center. After deployment, a small amount of sodium hydroxide will be present in the air bag and vehicle interior. Personal protection equipment must be used when removing the old system and cleaning the vehicle interior.

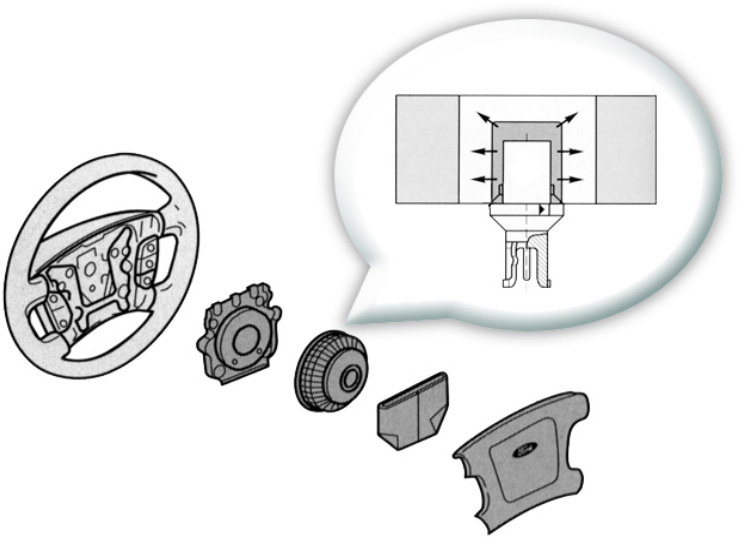

P

yrotechnic inflater and igniter[1]

Mechanical-Type Crash Sensor The crash sensor can take a number of forms; these can be described as mechanical or electronic. The mechanical system works by a spring holding a roller in a set position until an impact above a predetermined limit provides enough force to overcome the spring and the roller moves, triggering a micro switch. The switch is normally open with a resistor in parallel to allow the system to be monitored. Two switches similar to this may be used to ensure the bag is deployed only in the case of sufficient frontal impact. Note that the air bag is not deployed in the event of a rollover.

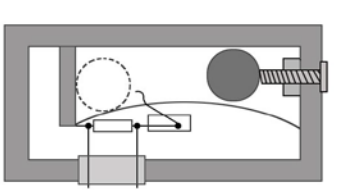

Crash sensor

Electronic Type Crash Sensor The other main type of crash sensor can be described as an accelerometer. This will sense deceleration, which is negative acceleration. A piezoelectric crystal accelerometer, much like an engine knock sensor, is used. Severe change in speed of the vehicle will cause an output from these sensors as the seismic mass moves or the springs bend. Suitable electronic circuits can monitor this and be pre-programmed to react further when a signal beyond a set threshold is reached. The advantage of this technique is that the sensors do not have to be designed for specific vehicles, as the changes can be software based.

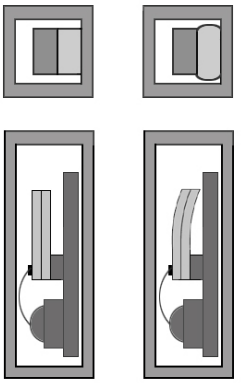

Crash sensor

Electronic Control Unit The final component to be considered is the electronic control unit or diagnostic control unit. When a mechanical type crash sensor is used, in theory no electronic unit would be required. A simple circuit could be used to deploy the air bag when the sensor switch operates. However, it is the system monitoring or diagnostic part of the ECU that is most important. If a failure is detected in any part of the circuit, then the warning light illuminates. Up to five or more faults can be stored in the ECU memory, which can be accessed by blink code or serial-fault readers. Conventional testing of the system with a multimeter and jump wires is not recommended because it might cause the air bag to deploy!

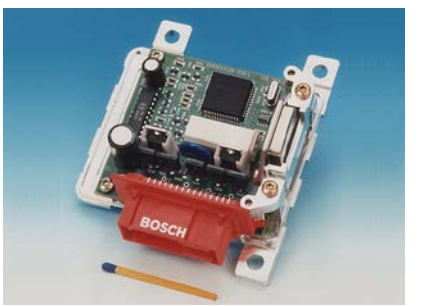

ECU[4]

Air Bag System A block diagram of an air-bag circuit is shown here. A digital-based system, using electronic sensors, has about 10ms at a vehicle speed of 50km/h, to decide if the restraint systems should be activated. In this time, about 10,000 computing operations are necessary. Data for the development of these algorithms is based on computer simulations, but digital systems can also remember the events during a crash, allowing real data to be collected.

System components block diagram

Seat Belt Tensioners Taking the slack out of a seat belt in the event of an impact contributes to vehicle passenger safety. The decision to take this action is the same as for the air bag. The two main types are:

Spring tension

Pyrotechnic.

When the explosive charge is fired, the cable pulls a lever on the seat belt reel, which in turn tightens the belt. The unit must be replaced once deployed. This feature is sometimes described as anti-submarining.

Belt tensioners[2]

Side Air Bags Air bags working on the same techniques to those described previously are being used to protect against side impacts. In some cases, bags are stowed in the door pillars or the edge of the roof.

Ford seat belt and air bag system[2]

Intelligent Airbag Sensing System Bosch has developed an 'Intelligent Airbag Sensing System,' which can determine the right reaction for a specific accident situation. The system can control a one- or two-stage airbag inflation process via a two-stage gas generator. Acting on signals from vehicle acceleration and belt buckle sensors, which vary according to the severity of the accident, the gas generator receives different control pulses, firing off one airbag stage (de-powering), both stages (full inflation), or staged inflation with a time interval.

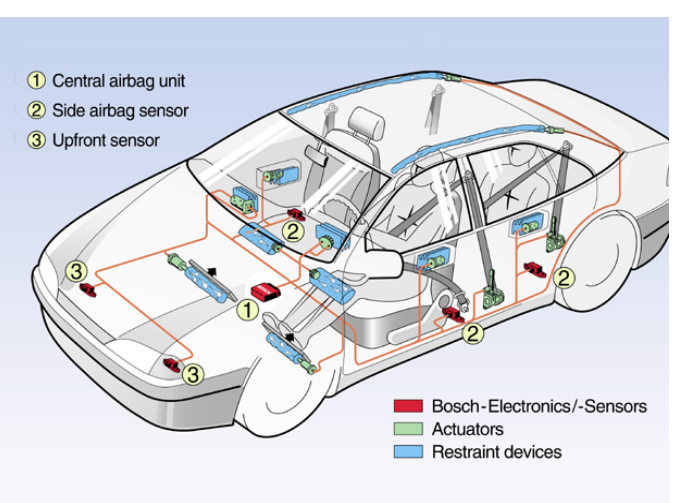

Bosch safety system[4]

Multistage Inflation Future developments will lead to capabilities for multistage inflation, following a set pattern. This pattern will be determined by the type of accident and the position of the vehicle occupants. The introduction of an automotive occupancy-sensing (AOS) unit that uses ultrasonic and infrared sensors will provide further enhancements. This additional feature will detect seat and child occupancy, and be capable of assessing whether a passenger is in a dangerous position.

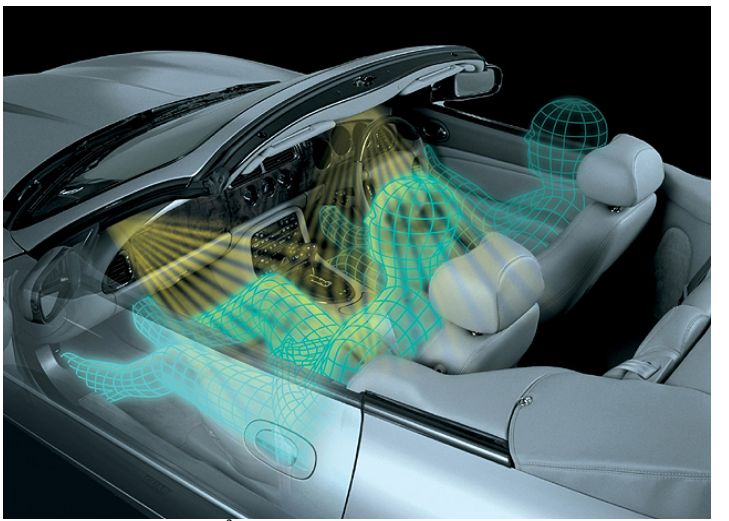

Jaguar adaptive restraints[2]

Pre-Crash Sensor Bosch officials hope that the latest radar technology will assist the design of a pre-crash sensor capable of detecting an estimated impact speed prior to collision allowing it to activate individual restraint systems, such as seatbelt pre-tensioners, or, if necessary, all available restraint systems.

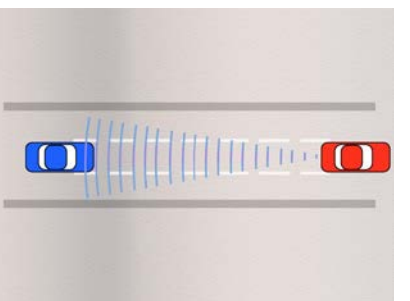

Radar technology[4]

Explain the deference between passive and active safety.

Read the previous section again and note down some key bullet points here:

-
-
-
-
-

Global positioning system (GPS)

History From 1974 to 1979, a trial using six satellites allowed navigation in North America for just four hours per day. This trial was extended worldwide by using eleven satellites until 1982 at which time it was decided that the system would be extended to twenty four satellites, in six orbits, with four operating in each. There are now some thirty one satellites in use. They are set at a height of about 21,000km (13,000 miles), inclined 55 degrees to the equator and take approximately twelve hours to orbit the Earth. The orbits are designed so that there are always six satellites in view, from most places on the earth.

Display in a Jaguar

Accuracy The system was developed by the American Department of Defence. Using an encrypted code allows a ground location to be positioned to within a few centimetres. The signal employed for civilian use is artificially reduced in quality so that positioning accuracy is in the region of 50m. Some systems however now improve on this and can work down to about 15m.

If you look really hard you can see the satellites…

Triangulation GPS satellites send out synchronized information fifty times a second. Orbit position, time and identification signals are transmitted. A modern GPS receiver will typically track all of the available satellites, but only a selection of them will be used to calculate position. The times taken for the signals to reach the vehicle are calculated and from this information the computer can determine the distance from each satellite.

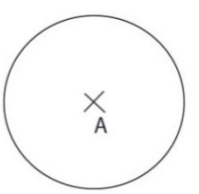

At a known distance from a fixed point ‘A’ you could be anywhere on a circle

The current vehicle position can then be worked out using three coordinates. Imagine the three satellites forming a triangle (represented here as A, B, C), the position of a vehicle within that triangle can be determined if the distance from each fixed point (satellite) is known. This is called triangulation.

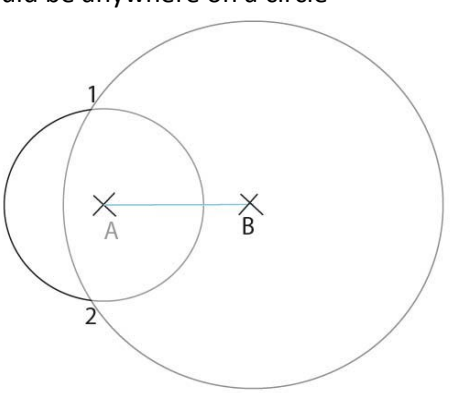

At a known distance from two fixed points ‘A and B’ you must be at position 1 or 2

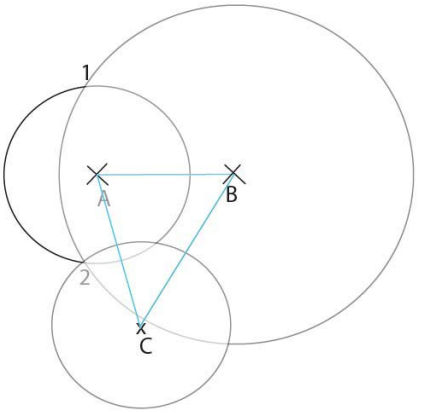

At a known distance from three fixed points 'A, B and C' then you must, in this case, be at position 2

Satellites The GPS receiver gets a signal from each GPS satellite. The satellites transmit the exact time that the signals are sent. By subtracting the time the signal was transmitted from the time it was received, the GPS can tell how far it is from each satellite. The GPS receiver also knows the exact position in the sky of the satellites, at the moment they sent their signals. So, given the travel time of the GPS signals from three satellites and their exact position in the sky, the GPS receiver can determine position in three dimensions – east/west, north/south and altitude.

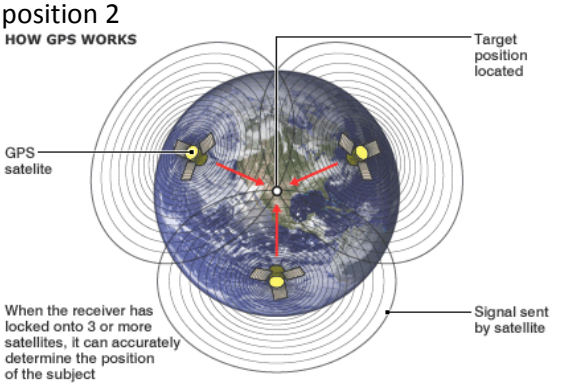

Calculations To calculate the time the GPS signals took to arrive, the GPS receiver needs to know the time very accurately. The GPS satellites have atomic clocks that keep very precise time, but it is not feasible to equip a GPS receiver with such a device. However, if the GPS receiver uses the signal from a fourth satellite it can solve an equation that lets it determine the exact time, without needing an atomic clock.

Four satellites used to determine vehicle position (Source: Ford)

Number of satellites If the GPS receiver is only able to get signals from three satellites, position can still be calculated, but less accurately. If only three satellites are available, the GPS receiver can get an approximate position by making the assumption that you are at mean sea level. If you really are at sea level, the position will be reasonably accurate, but if you are driving in the mountains, the two dimensional fix could be several hundreds of metres out.

GPS III satellite

Additional inputs As well as the satellite data, some in car systems also process the following input signals:

- Wheel speed sensors
- Reverse light switch
- Magnetic field sensor
- Turn angle sensor

It should also be noted that many GPS units now work without any additional inputs and accurate positioning can even be achieved by GPS receivers built into smartphones.

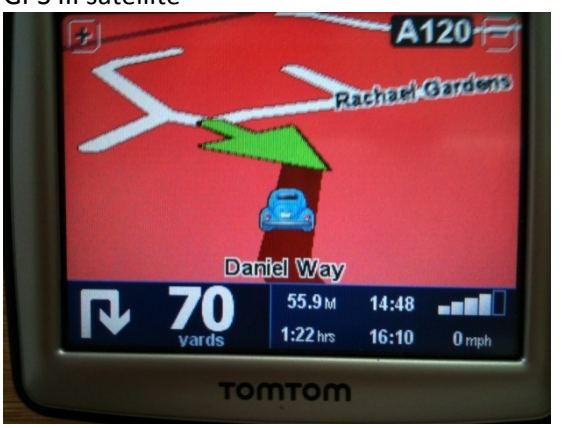

A well-known standalone GPS

Wheel speed sensors The wheel speed sensors provide information on distance covered. The sensors on the non-driven wheels are used because the driven wheels slip when accelerating. ABS wheel speed sensors have become smaller and more efficient. Recent models not only measure the speed and direction of rotation but can be integrated into the wheel bearing. On some systems turn angle is calculated by comparing left and right hand signals. This is not necessary when a turn angle sensor is used.

ABS wheel speed sensors (Source: Photo Bosch)

Reverse light switch The reverse light switch is used on some systems. This is because the signals from the wheel speed sensors do not indicate if the vehicle is travelling forwards or in reverse.

Reverse light switch

Magnetic field sensor The magnetic field sensor determines direction of travel in relation to the Earth's magnetic field. It also senses the changes in direction when driving round a corner or a bend.

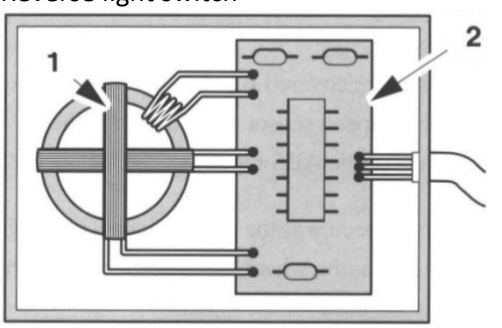

Field sensor: 1, crossed coils. 2, control circuit (Source: Ford)
All GPS units must have some sort of compass

The two crossed measuring coils sense changes in the Earth's magnetic field because it has a different effect in each of them. The direction of the Earth's field can be calculated from the polarity and voltage produced by these two coils. The smaller excitation coil produces a signal that causes the ferrite core to oscillate. The direction of the Earth's magnetic field causes the signals from the measuring coils to change depending on the direction of the vehicle.

Turn angle sensor The turn angle sensor allows the navigation computer to follow a digital map, in conjunction with other sensor signals, because it provides accurate information about the turning of the vehicle around its vertical axis. It is mounted in the main unit and supersedes the magnetic compass. The sensor is like a tiny tuning fork that is made to vibrate, in the kilohertz range, by the two lower piezo electric elements. The upper elements sense the acceleration when the vehicle changes direction. This is because the twisting of the piezo elements causes an electrical charge. This signal is processed, converted into a voltage that corresponds to vehicle turning movement, and sent on to the main computer.

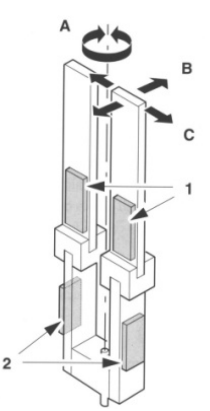

Turn angle sensor: 1, Piezo electric element (picks up acceleration in the twisting direction B around the vertical axis of the vehicle A). 2, Piezo electric element (causes vibration in direction C). (Source: Ford)

System use To use most satellite navigation systems, the destination address is entered using a joystick control, cursor keys or something similar. The systems usually ‘predict’ the possible destination as letters are entered so it is not usually necessary to enter the complete address. Once the destination is set the unit will calculate the journey. Options may be given for the shortest or quickest routes at this stage. Driving instructions, relating to the route to be followed, are given visually on the display and audibly through speakers.

Date from a DVD or CD

Controller

Setting destination

Street

Directions

Dead reckoning Even though the satellite information only provides a positional accuracy of about 50m, using dead-reckoning, intelligent software can still get the driver to their destination with an accuracy of about 5m in some cases. Dead-reckoning means that the vehicle position is determined from speed sensor and turn angle signals.

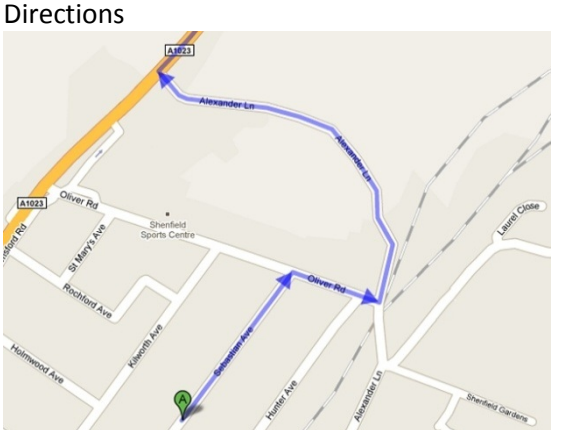

As the driver follows the instructions for the first right turn here, the system will 'know' the location to within a metre or so if steering angle is used as in input

The computer can update the vehicle position from the GPS data, by using the possible positions on the stored digital map. This is because in many places on the map only one particular position is possible – it is assumed that short cuts across fields are not taken! Dead-reckoning even allows navigation when satellite signals are disrupted.

New developments In July 2008, the Pentagon announced that Boeing would work on a High Integrity global positioning system demonstration contract that runs until January 2011.

GPS IIF satellite

The European Space Agency (ESA) has a program called the European Geostationary Navigation Overlay Service (EGNOS), which is an interim step until its competing Galileo GPS constellation can be built and deployed. EGNOS uses three satellites in geostationary orbit, correlating their information with GPS to improve civilian positioning accuracy from 15m to 2m.

The Office of Naval Research in the USA aims to work with an existing commercial constellation, the low-bandwidth Iridium constellation of satellites. This could create a GPS service that provides quicker positioning fixes and improved accuracy for military users. It would also be more resistant to jamming and other forms of damage.

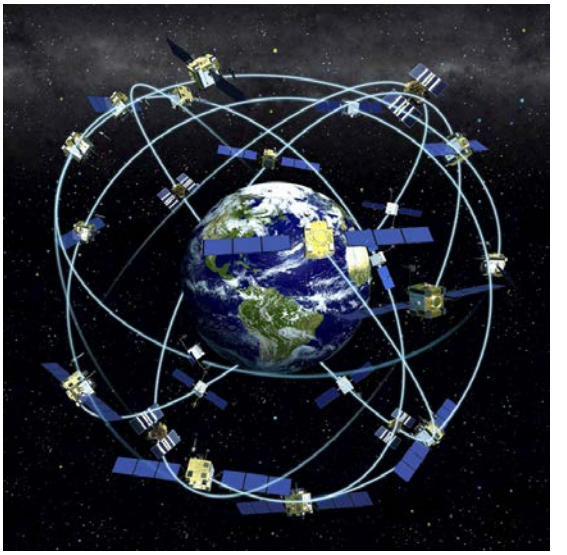

NAVSTAR Constellation
http://www.defenseindustrydaily.com

Summary Vehicle global positioning systems use a combination of information from satellites and sensors to accurately determine the vehicle position on a digital map. A route can then be calculated to a given destination. Like all vehicle systems, GPS continues to develop and will do for some time yet as more features are added to the software. Already it is possible to 'ask' many systems for the nearest fuel station or restaurant for example.

"You have reached your destination…"

Explain what is meant by dead-reckoning

Look back over the previous section and write out a list of the key bullet points here:

Multiplexing

Overview

Introduction The number of vehicle components which are networked, has considerably increased the requirements for the vehicle control systems to communicate with one another. The CAN (Controller Area Network) developed by Bosch is today's communication standard in passenger cars. However, there are a number of other systems.

Signal path Multiplexing is a process of combining several messages for transmission over the same signal path. The signal path is called the data bus. The data bus is basically just a couple of wires connecting the control units together.

A data bus consists of a communication or signal wire and a ground return, serving all multiplex system nodes. The term node is given to any sub-assembly of a multiplex system (such as a control unit) that communicates on the data bus.

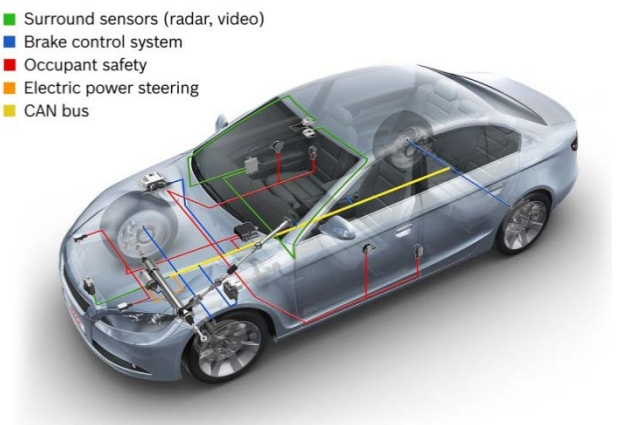

Bosch technologies for driver assistance (Source: Bosch Media)

Benefits Not all vehicle systems are networked. However, The application of partial multiplex has achieved the following:

- A reduction of wiring harness weight and bulk
- An improvement of system functions and responsiveness with integrated control
- A reduction in production methods and cost
- Improvement in troubleshooting, the system can self-diagnose any faults at the final point of assembly and at any time during service.

Early multiplexing systems On some vehicles, early multiplex systems used three control units. These were the door control unit, the driver's side control unit and the passenger's side control unit. These three units replaced the following:

- Integrated unit
- Interlock control unit
- Door lock control unit
- Illumination light control
- Power window control unit
- Security alarm control unit

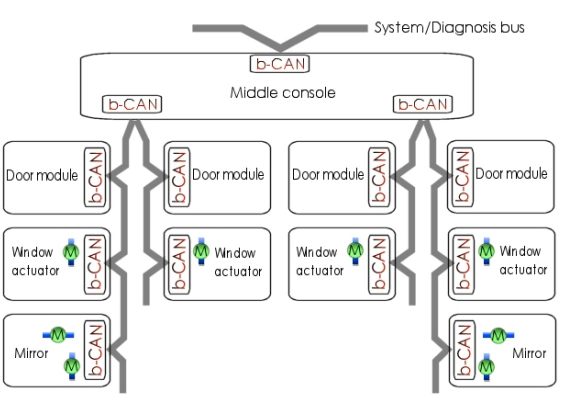

Sub-system for doors

Generation 1 and 2 Most manufacturers' systems went through a number of generations. The construction of a typical first generation multiplex control system is shown in the first picture.

The second generation system in the second picture, unlike previous multiplex systems, has a single bi-directional bus-type communication line between driver-ECU and passenger-ECU.

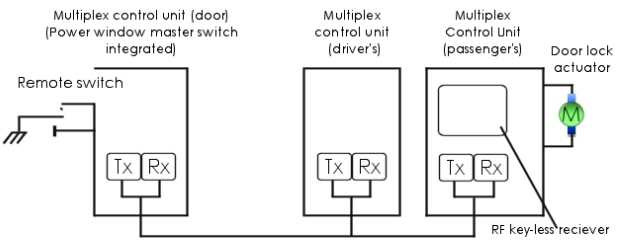

Bus-type (bi-directional) communication system using microcomputer-based communication ports

Generation 1

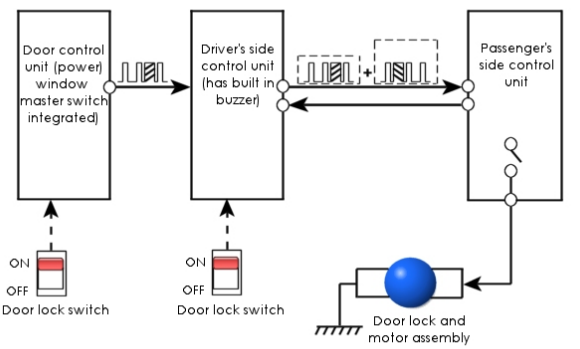

Generation 2

Generation 3 The third generation added more features:

- Communication transfer speed of up to 16kBbit/s
- Faster system shutdown
- Diagnostic modes
- Gauge module self-diagnosis function.

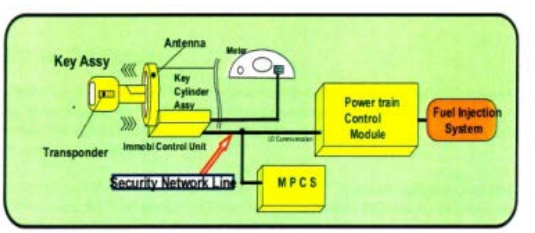

Gauge control module

Generation 4 The fourth generation is a controller area network system (CAN) which has many control units operating over two networks:

Basic CAN (B-CAN) [sometimes Body CAN]

Fast CAN (F-CAN)

More details on CAN later.

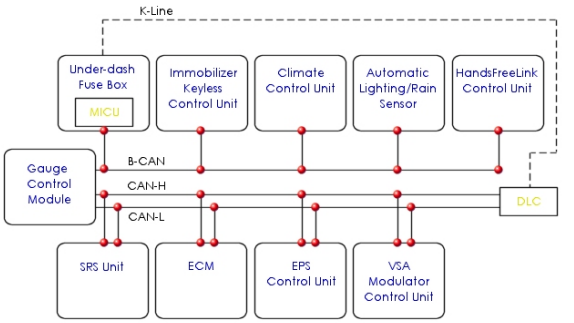

Combined B-CAN and F-CAN

Multiplex Operation When a switch is operated, a coded digital signal is generated and communicated, according to its priority, via the data bus. All control units receive the signal but only the control unit for which the signal is intended will activate the desired response.

✍ Copy the image here

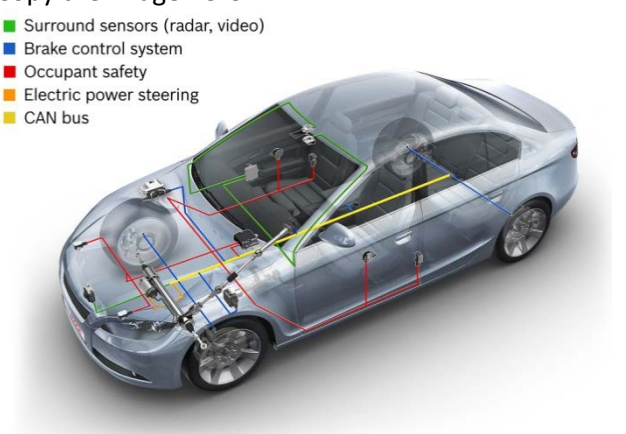

A data bus connects all networked components

Data bus Only one signal can be sent on the BUS at any one time. Therefore each signal has an identifier that is unique throughout the network. The identifier defines not only the content but also the priority of the message. Some systems make changes or adjustments to their operation much faster than other systems. Therefore, when two signals are sent at the same time, it is the system which requires the message most urgently whose signal takes priority.

Control functions Multiplex control systems have 'wake-up' and 'sleep' functions to decrease parasitic draw on the battery.

Asleep

The multiplex control unit stops the functions (communication and CPU control) when the system is not required to operate. For example when the ignition switch is turned off, the control units will go into sleep mode ten seconds later, assuming that all the doors are closed. As soon as any operation happens (for example a door is opened) the related control unit receives

a wake-up call.

Each control unit also has a hardware fail-safe function that fixes the output signal when there is any CPU malfunction. It also has a software fail-safe function, which ignores the signal from the malfunctioning control unit, and allows the system to operate normally.

Self-diagnosis A multiplex control system has the advantage of self-diagnosis. This allows quick and easy troubleshooting and verification using diagnostic trouble codes (DTCs)

Awake (or ajar)!

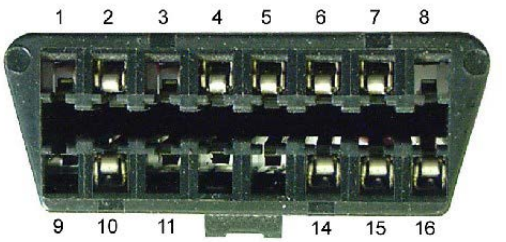

16 pin data link connector

Summary Many vehicles contain over a kilometre of wiring to supply all their electrical components. Luxury models may contain considerably more because of elaborate drivers' aids. The use of multiplexing means that considerably less wiring is used in a vehicle along with fewer multi-plugs and connectors etc.

An additional advantage is that existing systems can be upgraded or added to without modification to the original system.

The advantages are therefore:

Reduction in vehicle mass

Fewer raw materials used

Fewer components to dispose of

Reduction in build time

Less research and development – a system can be used in many models

Increased reliability

System expandability

Controller area network (Source: Bosch Media)

Controller Area Network (CAN)

Introduction CAN is a serial bus system especially suited for networking 'intelligent' devices as well as sensors and actuators within a system or sub-system. It operates in a broadly similar way to a wired computer network. CAN stands for controller area network and means that control units are able to interchange data. It was first developed by Bosch.

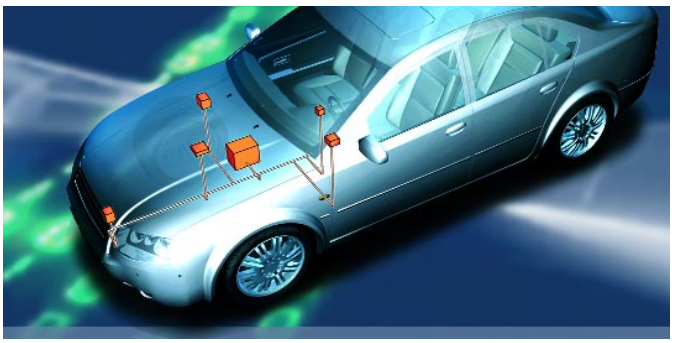

Controller area network (Source: Bosch Media)

High-integrity CAN is a high-integrity serial data communications bus for real-time applications. It operates at data rates of up to 1Mbit/s. It also has excellent error detection and confinement capabilities.

CAN was originally developed by Bosch for use in cars but is now used in many other industrial automation and control applications.

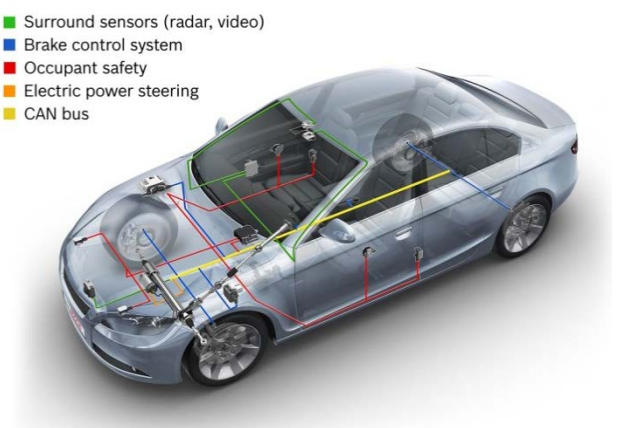

Bosch technologies for driver assistance (Source: Bosch Media)

Multi-master capabilities CAN is a serial bus system with multi-master capabilities. This means that all CAN nodes are able to transmit data and several CAN nodes can request use of the bus simultaneously. In CAN networks there is no addressing of subscribers or stations, like on a computer network, but instead, prioritized messages are transmitted. A transmitter sends a message to all CAN nodes (broadcasting). Each node decides on the basis of the identifier received whether it should process the message or not. The identifier also determines the priority that the message enjoys in competition for bus access.

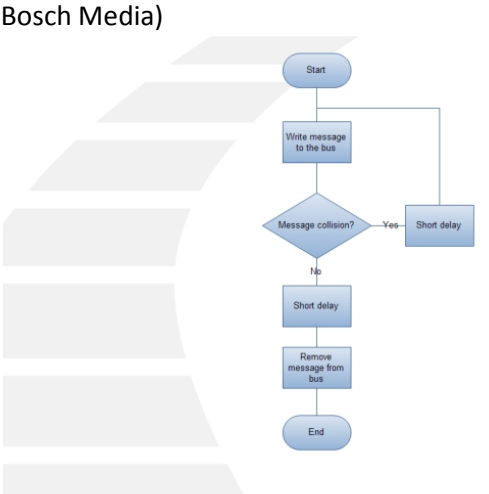

Much simplified CAN message protocol flowchart

F-CAN and B-CAN Fast controller area network (F-CAN) and basic (or body) controller area network (B-CAN) share information between multiple electronic control units (ECUs). B-CAN communication is transmitted at a slower speed for convenience related items such as electric windows. F-CAN information moves at a faster speed for real time functions such as fuel and emissions systems. To allow both systems to share information, a control module translates information between B-CAN and F-CAN.

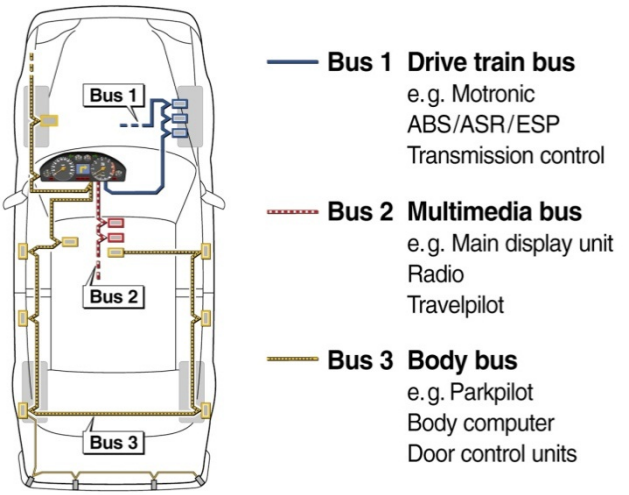

Three different speed buses in use (Source: Bosch Media)

Circuits The ECUs on the B-CAN and F-CAN transmit and receive information in the form of structured messages that may be received by several different ECUs on the network at one time. These messages are transmitted and received across a communication circuit that consists of a single wire that is shared by all the ECUs. However, as messages on the F-CAN network are typically of higher importance, a second wire is used for communication circuit integrity monitoring. This CAN-H and CAN-L circuit forms the CAN-bus.

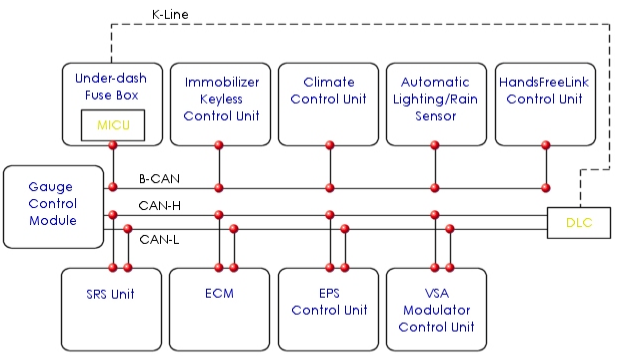

F-CAN uses CAN-H (high) and CAN-L (low) wires

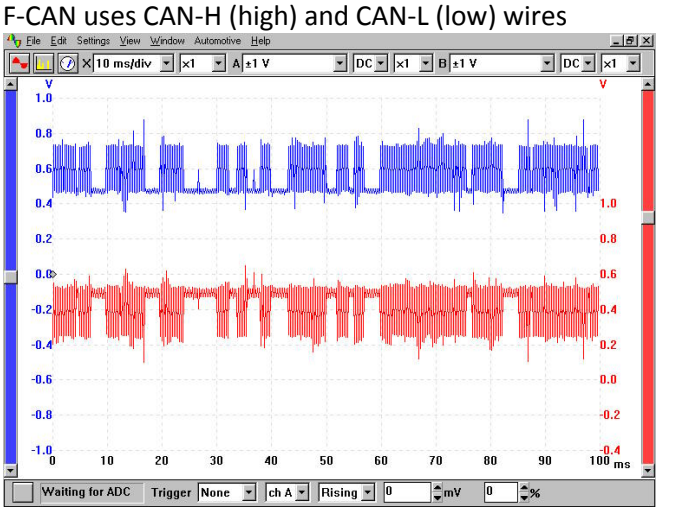

The CAN-H and CAN-L signals can be inspected as shown here on a PicoScope

Multiplex control unit A multiplex control unit is usually combined with the under-dash fuse/relay box. It controls many of the vehicle systems related to body electrics and the B-CAN. It also carries out much of the remote switching of various hardwired and CAN controlled systems.

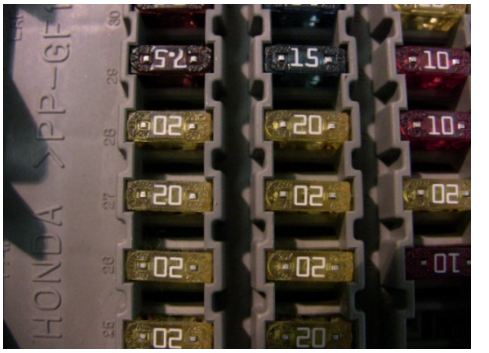

The multiplex control unit is incorporated in this fuse box

Error correction One of the outstanding features of the CAN protocol is its high transmission reliability. The CAN controller registers a station's error and evaluates it statistically in order to take appropriate measures. These may extend to disconnecting the CAN node producing the errors.

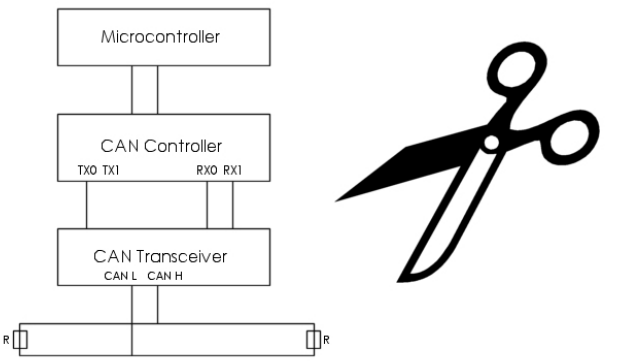

CAN nodes can be disconnected by the control program

Information Each CAN message can transmit from 0 to 8 bytes of user information. Longer messages can be sent by using segmentation, which means slicing a longer message into smaller parts. The maximum transmission rate is specified as 1Mbit/s. This value applies to networks up to 40m which is more than enough for normal cars and trucks.

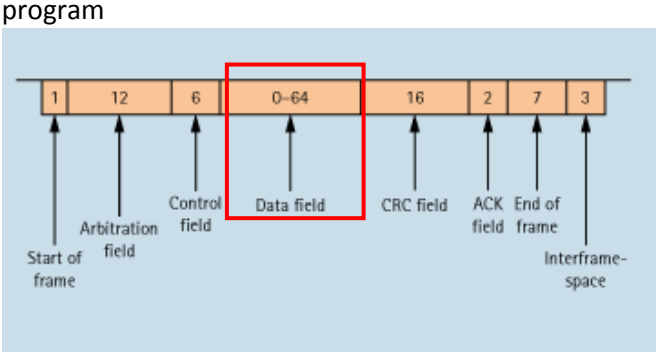

The data field is 64 bits which is 8 bytes

Summary CAN is a serial bus system designed for networking ECUs as well as sensors and actuators. CAN, originally developed by Bosch, stands for controller area network and means that control units are able to share and exchange data.

Look back over the previous section and write out a list of the key bullet points here:

CAN data signal

CAN message signal The CAN message signal consists of a sequence of binary digits or bits. A high voltage present indicates the value 1, a low or no voltage indicates 0. The actual message can vary between 44 and 108 bits in length. This is made up of a start bit, name, control bits, the data itself, a cyclic redundancy check (CRC) for error detection, a confirmation signal and finally a number of stop bits.

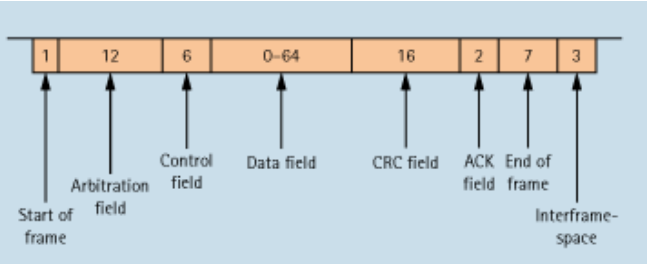

Message format (the 3 spaces are not part of the message)

1000101010001010111110000111010111101010101 01000111110101111001100110000011111101010100 00011111111111000000001

Example binary format

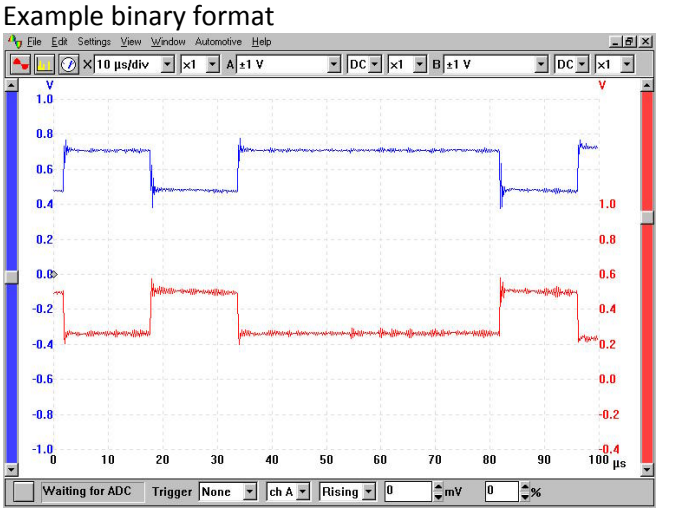

Section of an actual electrical signal

The message identifier or name This portion of the signal identifies the message destination and also its priority. As the transmitter puts a message on the data bus it also reads the name back from the bus. If the name is not the same as the one it sent, then another transmitter must be in operation, which has a higher priority. If this is the case it will stop transmission of its own message. This is very important in the case of motor vehicle data transmission.

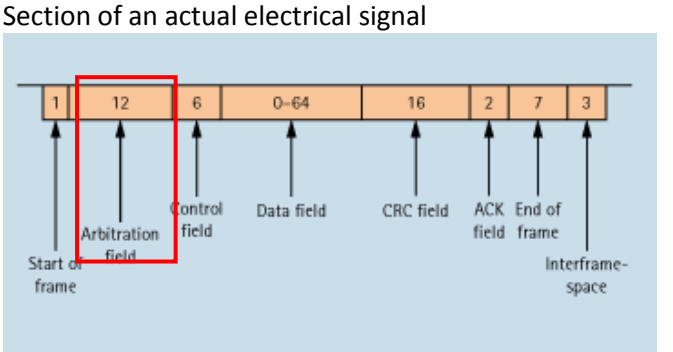

The message identifier or name is part of the arbitration field

Errors Errors in a message are recognised by what is known as a cyclic redundancy check (CRC). This is an error detection scheme in which all the bits in a block of data are divided by a predetermined binary number. A check character, known to the transmitter and receiver, is determined by the remainder. If an error is recognised the message on the bus is destroyed. This in turn is recognised by the transmitter, which then sends the message again. This technique, when combined with additional tests, makes it possible to discover all faulty messages.

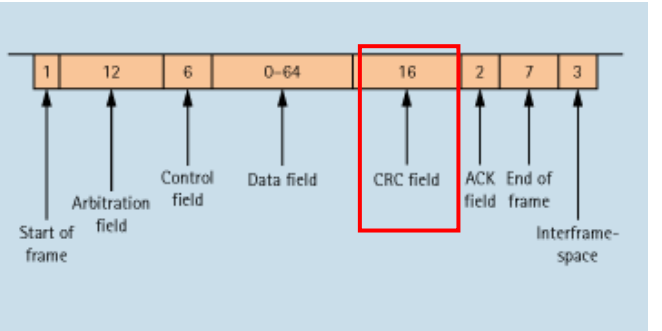

The cyclic redundancy check (CRC) field is part of the overall message

(The basic idea behind CRCs is to treat the message string as a single binary word M, and divide it by a key word k that is known to both the transmitter and the receiver. The remainder r left after dividing M by k constitutes the "check word" for the given message. The transmitter sends both the message string M and the check word r, and the receiver can then check the data by repeating the calculation, dividing M by the key word k, and verifying that the remainder is r.)

Self-monitoring Because each node in effect monitors its own output, interrupts disturbed transmissions, and acknowledges correct transmissions, faulty stations can be recognised and uncoupled (electronically) from the bus. This prevents other transmissions from being disturbed.

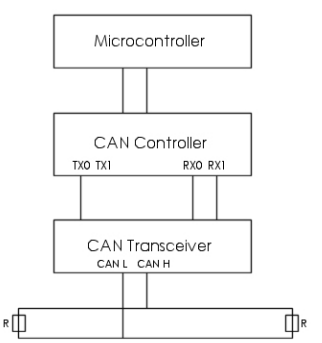

CAN Node

Summary A CAN message may vary between 44 and 108 bits in length. This is made up of a start bit, name, control bits, the data itself, CRC error detection, a confirmation signal and finally a number of stop bits.

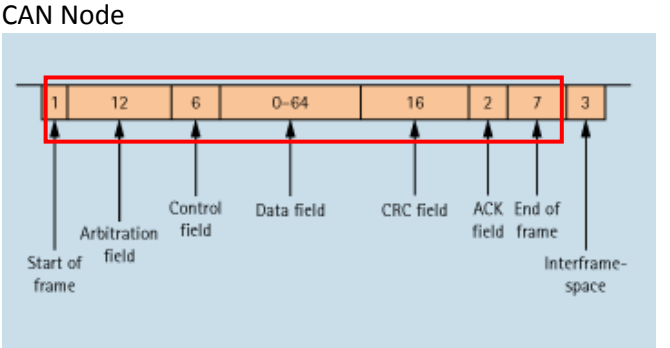

CAN Message

Local Interconnect Network (LIN)

Introduction A local interconnect network (LIN) is a serial bus system especially suited for networking 'intelligent' devices, sensors and actuators within a sub-system. It is a concept for low cost automotive networks, which complements existing automotive multiplex networks such as CAN.

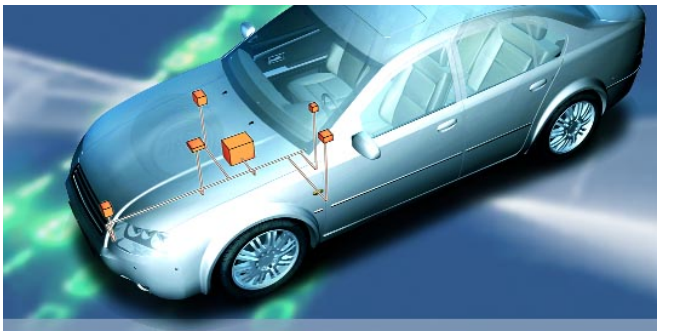

Representation of LIN (Source: Bosch Media)

Hierarchical vehicle network LIN enables the implementation of a hierarchical vehicle network. This allows further quality enhancement and cost reduction of vehicles.

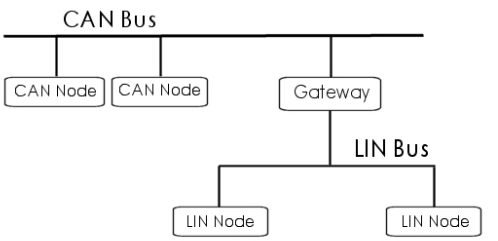

Structure using CAN and LIN

Standard The LIN standard includes the specification of the transmission protocol, the transmission medium, the interface between development tools, and the interfaces for software programming. LIN guarantees the interoperability of network nodes from the viewpoint of hardware and software, and predictable electro-magnetic compatibility (EMC) behaviour.

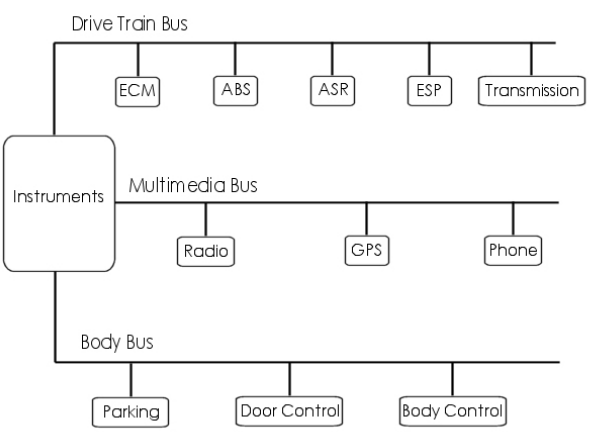

Standards allow communication between different systems

Single master, multiple slave network concept LIN is a time triggered single master, multiple slave network concept. It is based on common interface hardware, which makes it a low cost solution. Additional attributes of LIN are:

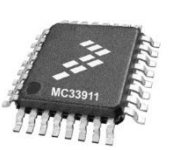

LIN package (Source: Freescale Semiconductor)

- Multicast reception with self-synchronization

- Selectable length of message frames
- Data checksum security and error detection
- Single-wire implementation
- Speed up to 20kBit/s.

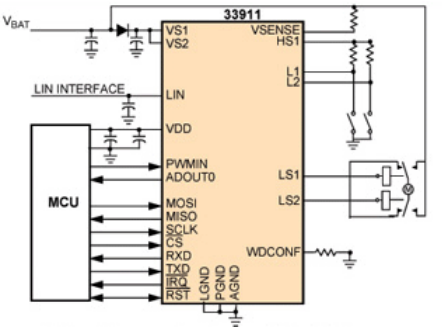

System basis chip (SBC) with a LIN transceiver. (Source: Freescale Semiconductor)

Summary LIN provides a cost efficient bus communication where the bandwidth and versatility of CAN are not required. It is used for non-critical systems.

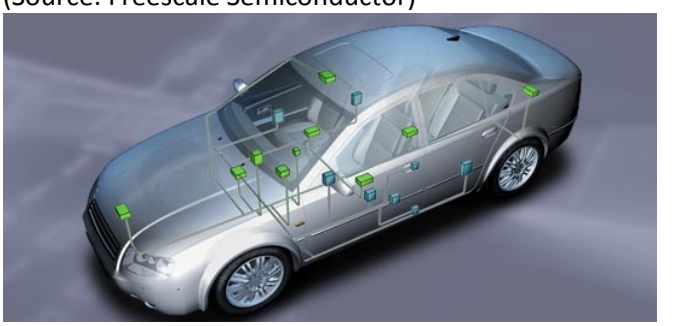

Local Interconnect Network (LIN)

Explain what is meant by 'transmission protocol'

Look back over the previous section and write out a list of the key bullet points here:

FlexRay

Introduction FlexRay is a fast and fault-tolerant bus system for automotive use. It was developed, using the experience of well-known OEMs. It is designed to meet the needs of current and future in-car control applications that require a high bandwidth. The bit rate for FlexRay can be programmed to values up to 10MBit/s.

FlexRay logo

Data exchange The data exchange between the control devices, sensors and actuators in

automobiles is mainly carried out via CAN systems.

However, the introduction of X-by-wire systems has resulted in increased requirements. This is especially so with regard to error tolerance and speed of message transmission.

FlexRay meets these requirements by message transmission in fixed time slots, and by fault-tolerant and redundant message transmission on two channels.

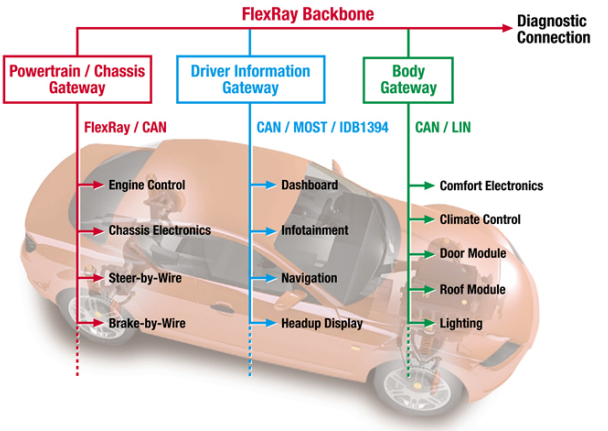

FlexRay Backbone (Source: Fujitsu Media)

Physical Layer The physical layer means the hardware, that is, the actual components and wires. FlexRay works on the principle of: time division multiple access (TDMA). This means that components or messages have fixed time slots in which they have exclusive access to the data bus. These time slots are repeated in a cycle and are just a few milliseconds long.

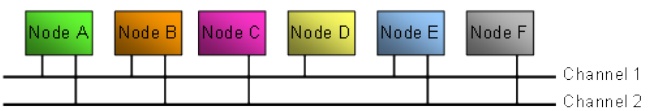

FlexRay topology with two channels (Source: Eberspacher)

Bandwidth The fixed allocation of the bus bandwidth to the components or messages by means of fixed time slots has the disadvantage that the bandwidth is not fully used. For example, if a component is simply not in use at its slot-time. To get over this, FlexRay subdivides the cycle into static and dynamic segments. The fixed time slots are situated in the static segment at the beginning of a bus cycle. In the dynamic segment, the time slots are assigned dynamically, in other words, as they are needed. Exclusive bus access is only enabled for a short time in 'mini-slots'. This mini-slot is then only extended if a bus access occurs. Bandwidth is therefore used up only when it is actually needed.

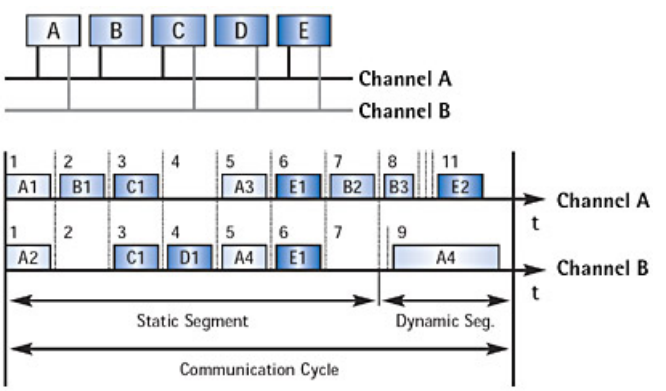

Bandwidth timeslots

Data rate FlexRay communicates via two physically separated lines with a data rate of up to 10Mbit/s on each. The two lines are mainly used for redundant and therefore fault-tolerant message transmission, but they can also transmit different messages.

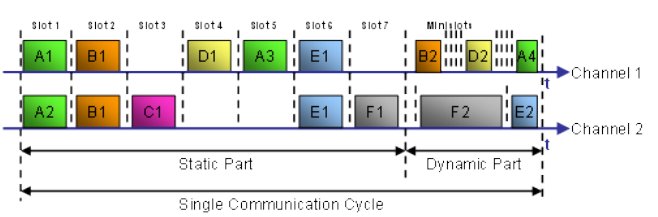

FlexRay communication cycle (Source: Eberspacher)

Synchronization In order to implement synchronous functions and use all available bandwidth, the distributed nodes on the network require a common time base. Clock synchronization messages are therefore transmitted in the static segment of each cycle.

FlexRay – or is it the Matrix…

FlexRay ECU A FlexRay ECU consists of a host processor, a FlexRay communication controller (CC), a bus guardian (BG) and a bus driver (BD). The host processor supplies and processes the data, which are transmitted via the controller. The process is as follows:

Bus guardian monitors access to the bus

Host processor informs the bus guardian which time slots the communication controller has allocated

Bus guardian allows the communication controller to transmit data only in these time slots

Bus driver is enabled.

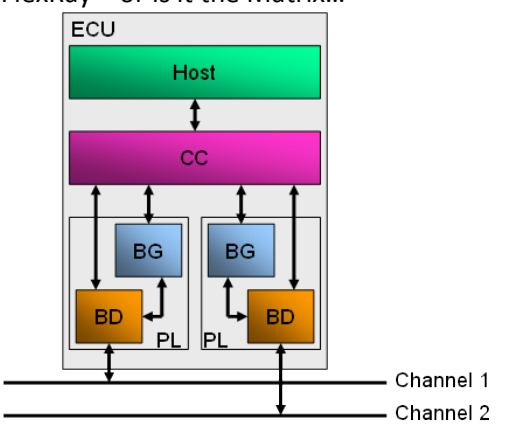

FlexRay ECU (Source: Eberspacher)

Summary FlexRay is a fast and fault-tolerant bus system that was developed to meet the needs of high bandwidth applications such as X-by-wire systems. Error tolerance and speed of message transmission in these systems is essential.

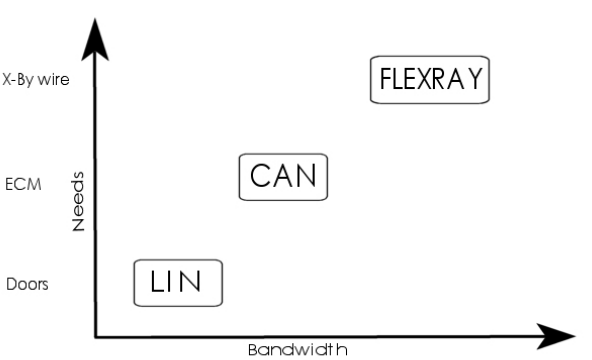

Comparing requirements and data rates of the three systems

Introduction Picotech have produced the CAN Test Box. This gives easy access to the 16 pins of the diagnostic connector that is fitted to all modern vehicles. Depending on the configuration of the vehicle, this may allow you to check power, ground and CAN Bus signal quality.

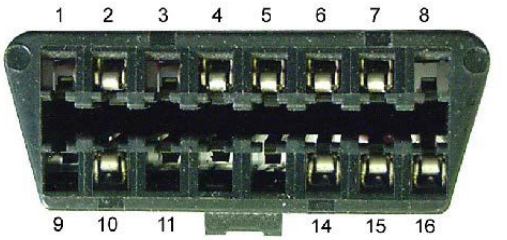

16 pin data link connector

Connector design and location is dictated by an industry wide standard. Vehicle manufacturers can use the empty DLC terminals for whatever they would like. However, the DLC of every vehicle is required to provide pins 4 and 5 and 16 as defined below. Further, after the Controller Area Network (CAN) protocol was fully implemented in the 2008 model year, all vehicles must use pins 6 and 14 as defined below:

- *Terminal 2 - SAE J1850 10.4k bits per second (BPS) variable pulse width serial data (GM Class-2) or SAE J1850 41.6k bps pulse width modulation serial data high line (Ford).*
- *Terminal 4 - Scan tool chassis ground*
- *Terminal 5 - Common signal ground for serial data lines (Logic Low)*
- *Terminal 6 - ISO 11898/15765/SAE J2284 CAN serial data high line*
- *Terminal 7 - ISO 9141 K serial data Line or ISO 14230 (Keyword 2000) serial data line (DaimlerChrysler/Honda/Toyota)*
- *Terminal 10 - SAE J1850 41.6k bps pulse width modulation serial data low line (Ford)*
- *Terminal 14 - ISO 11898/15765/SAE J2284 CAN serial data low line*
- *Terminal 15 - ISO 9141 L serial data Line or ISO 14230 (Keyword 2000) serial data line (DaimlerChrysler/Honda)*
- *Terminal 16 - Scan tool power (Un-switched battery positive voltage)*

Components With the test leads supplied, a PicoScope automotive scope, or any other suitable scope may be connected to the CAN test box. This allows the monitoring of any signals present, such as CAN-High and CAN-Low. The CAN Test Box has a 2.5 metre cable so that work can be carried out at a convenient location away from the diagnostic connector. An additional pass-through connector allows a scan tool to be connected at the same time as a scope. Its 4-mm sockets are backlit by LEDs to show the state of each pin on the connector.

CAN Test Box (Source: www.picotech.com)

The CAN test box is powered by the diagnostic

connector, so a power source is not needed.

CAN scope patterns Two scope patterns are shown here. The second is on a timebase 1000 times faster than the first so that more details of the signal are shown. The connection for one of the traces is to pin 6 and the other to pin 14.

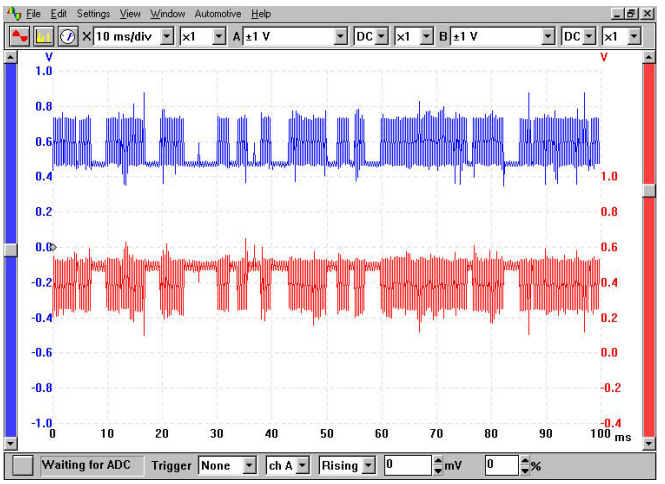

CAN high and low signals on a 10ms/div timebase (Source: www.picotech.com)

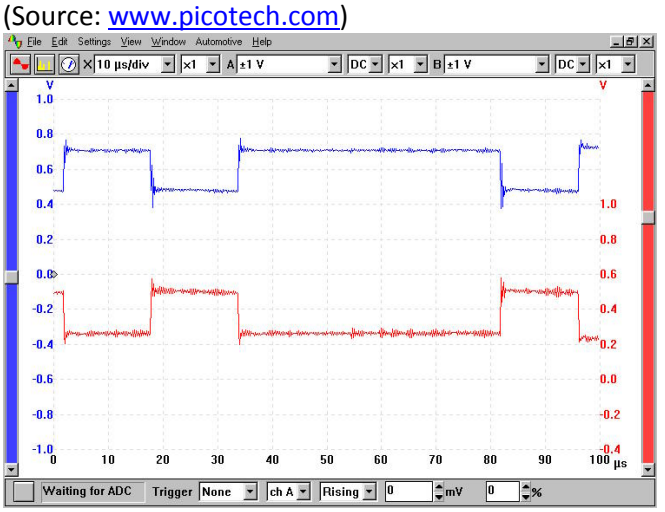

CAN high and low signals on a 10us/div timebase (Source: www.picotech.com)

Example OBD/CAN reader The KTS 200 controller diagnostic tester from Bosch offers a wide range of features. It reads diagnostic codes and CAN data.

The device can be used both as a full controller diagnostic tester, complete with a testing scope, and for straightforward servicing work on vehicles.

It is powered via the diagnostic cable, the cigarette lighter cable or a power pack.

Bosch KTS 200 in use

KTS 200 kit

Summary OBD has been in use for some time in its different formats. However, the CAN protocol is a popular standard and is making significant in-roads into the market. Since 2008, all vehicles sold in the EU and US are required to have implemented CAN. This should finally eliminate the ambiguity of the several existing signalling protocols.

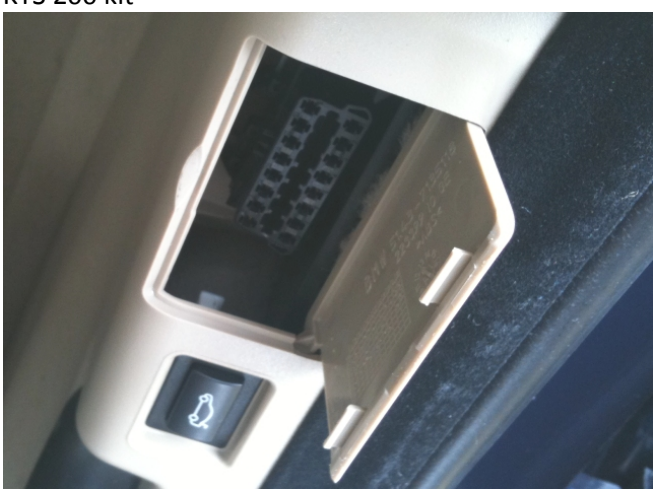
OBD connector on a BMW

State the main differences between CAN, LIN and FlexRay

Look back over the previous section and write out a list of the key bullet points here:

Central electrical control

System operation

Introduction For many years the trend with automotive electrical systems has been towards some sort of networked central control. This makes sense because many systems can share one source of information and, with the proper equipment, diagnostics can be made easier. Also, centralization allows facilities to be linked and improved. For example, networking and centralization of control units makes it easier to have a system where the engine will not start if a door is open, or selection of reverse gear can operate a rear wiper when the fronts are switched on.

Mustang concept car

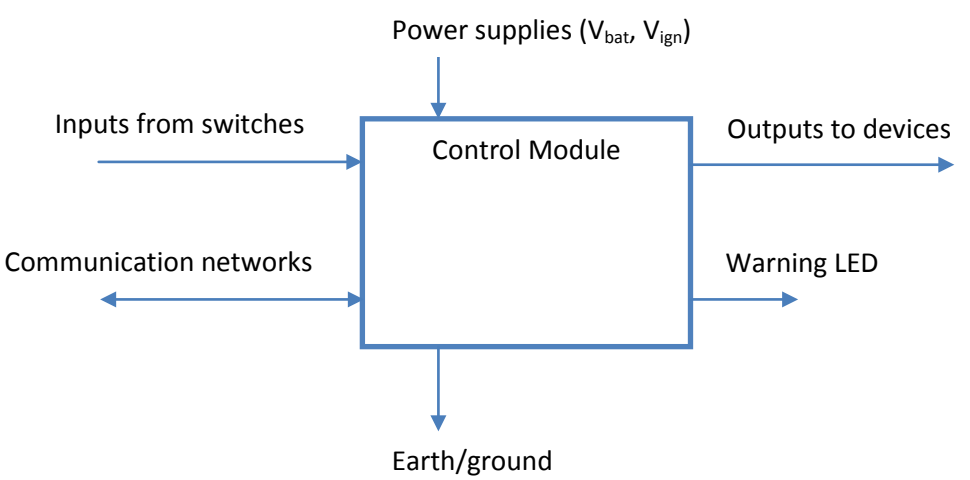

The basic central control system can be simplified in a way that is represented here

Central control usage The most common usage of central control is for body systems such as lighting, wipers, doors, seats and windows. In some cases these systems are controlled by slave units via a communication network, in other cases, one unit controls everything. In almost all cases, this central unit is networked to other ECUs.

Some central control modules connect via normal wires to switches that supply normal voltage on/off signals, others use switches that communicate on the CAN or LIN networks. The outputs from the module are sent via relays or solid state switches on standard wires.

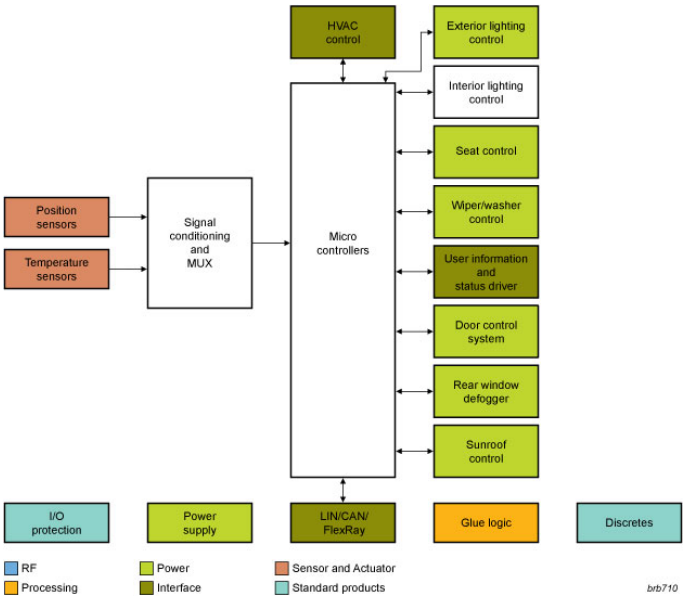

Central control module block diagram (Source: NXP)

Names Manufacturers have different names for these systems and the control units but most have a similar function. Four example names follow:

- Body control module (BCM)
- General electronic module (GEM)
- Central control unit (CCU)
- Central control module (CCM)

Central control module (Source: Continental)

Detailed system and circuit diagrams The images here show a full circuit diagram (in two halves) that has been adapted from materials supplied by Ford Motor Company. The circuit shows a general electronic module (GEM) and how it is used to control the wipers (in this case). Note that the multifunction wiper switch contains a series of switch contacts that all connect directly back to the GEM. Also note the CAN connection to the module.

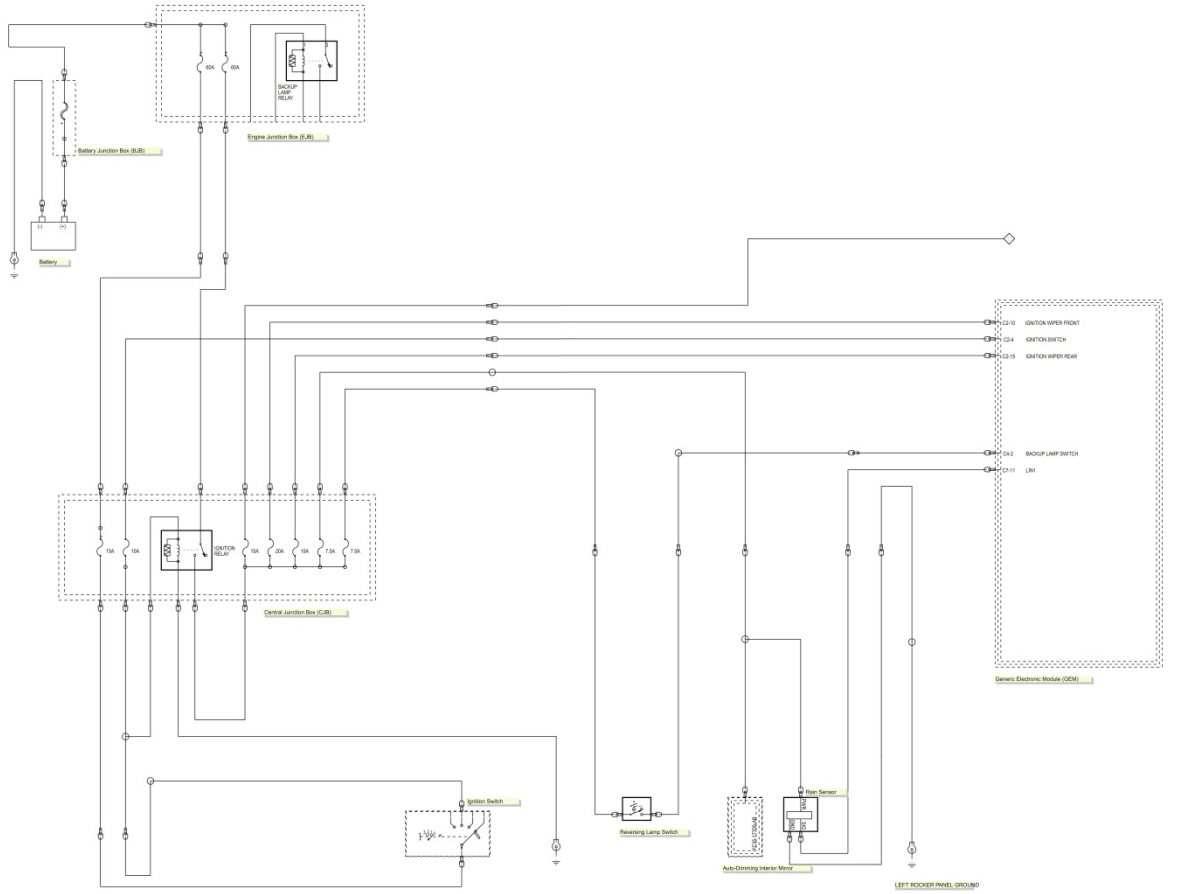

Part 1 of a wiper circuit using a central control module (Source: Ford Motor Company)

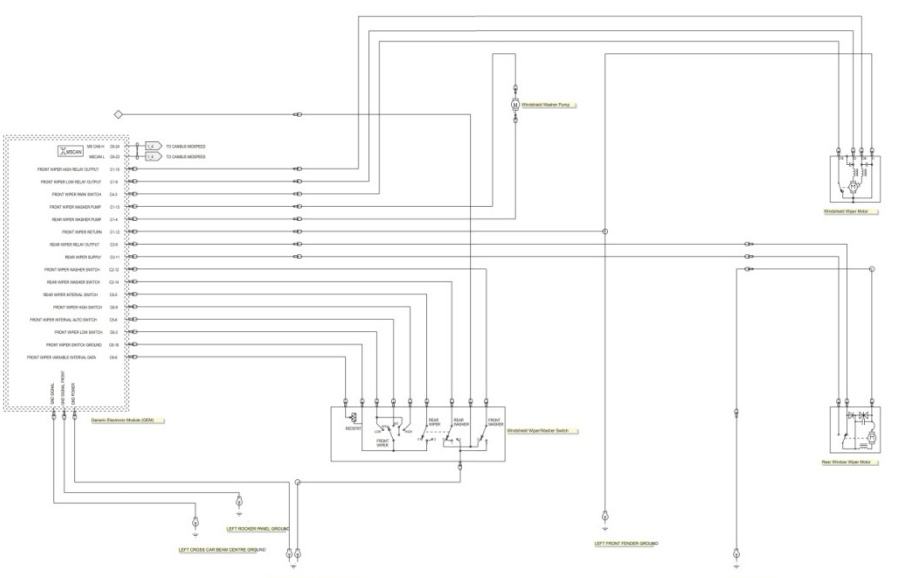

Part 2 of a wiper circuit using a central control module (Source: Ford Motor Company)

Lighting system The diagram here is from a Ford vehicle with adaptive front lighting. The light switch in this case has a supply (30) and an earth/ground (31) connection, but that all commands to operate the lights are sent via the LIN bus. The GEM supplies outputs to operate the lights and a separate module is used in this case for the adaptive features of the lights.

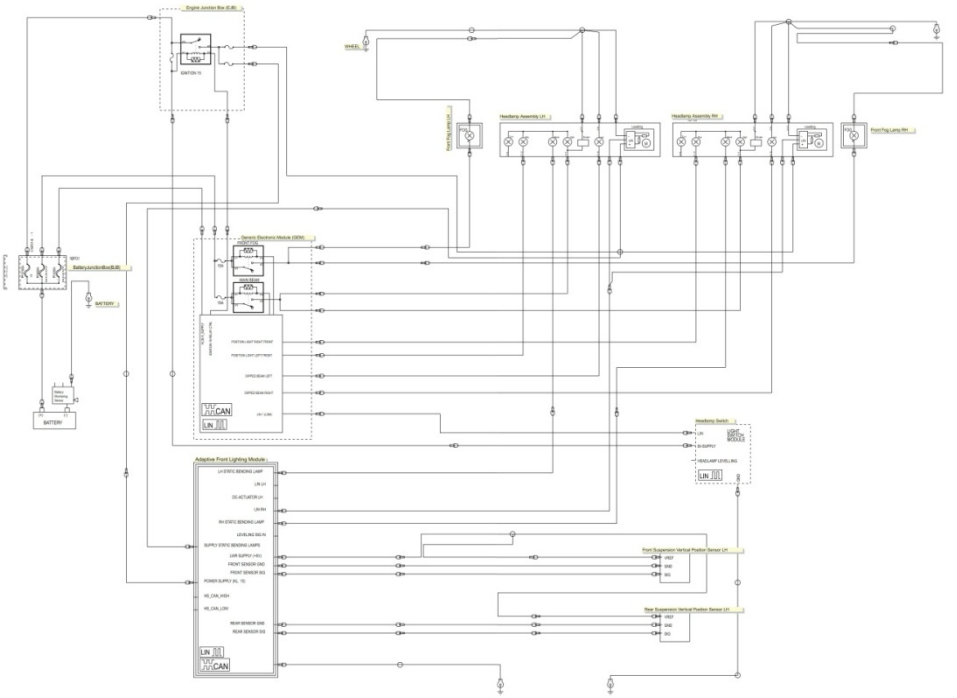

Lighting circuit using a general electronic module (Source: Ford Motor Company)

Control units A central body control module (BCM) is the primary hub that maintains body functions, such as:

- internal and external lighting
- security and access control
- comfort features for doors and seats
- other convenience controls.

It will in many cases also link to other systems such as the powertrain.

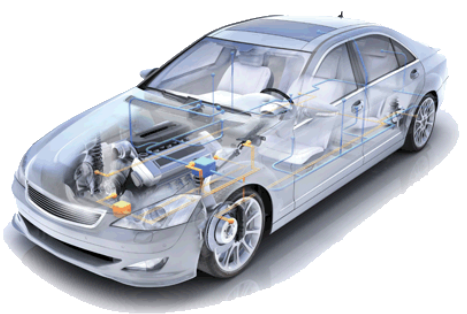

Control systems

Control module details A company called FreeScale produces high quality 16-bit MCU families that target many BCM applications. A single board computer (SBC) combines voltage regulation with a CAN or LIN physical interface in a single package. H-bridge drivers and a series of high-side switches drive high-current loads and replace relays.

The gateway serves as the information bridge between various in-car communication networks, including Ethernet, FlexRay, CAN, LIN and MOST protocols. It also serves as the car's central diagnostic interface.

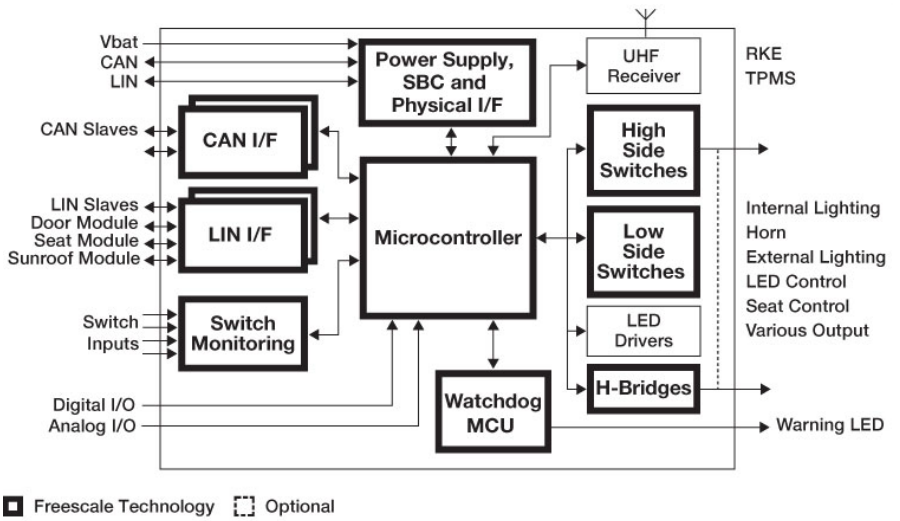

Details of the body control module and central gateway (Source: FreeScale Electronics)

Exterior lighting Exterior lighting plays an important role in the safety of car passengers and other road users. Different types of lamps (e.g. halogen, xenon or LED) are used in a variety of lighting functions, such as brake lights, turn indicators, low and high beam headlights, daytime running lights and others. More advanced functions include light bending, levelling and shaping to adapt to changing driving conditions.

Modern vehicle high intensity discharge (HID) lights

Lighting control The FreeScale 'eXtreme' switch product family of intelligent high-side switches use performance profiles tailored for different lamp types. They feature extensive diagnostic functionalities to detect faults and malfunctions and provide 'wave-shaping' to improve system-level EMC performance.

This image shows the internal configuration of a lighting control module that uses solid-state switching.

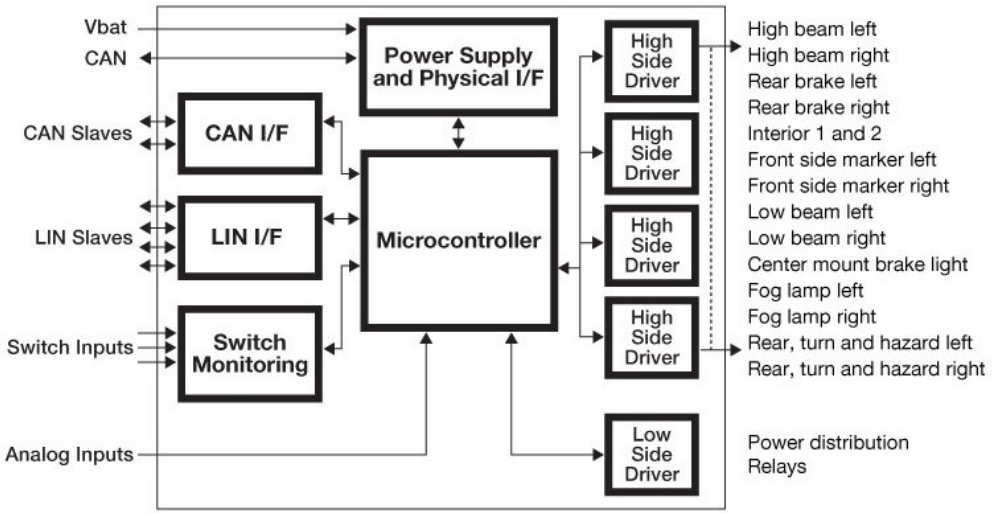

Lighting control unit (Source: FreeScale Electronics)

Switching components The system is designed for low-voltage automotive lighting applications. Its four MOSFETs (dual 10mΩ/dual 12mΩ) can control four separate 55W / 28W bulbs, and/or Xenon modules, and/or LEDs.

Programming, control and diagnostics are accomplished using a 16-bit SPI interface. Its output with selectable slew rate improves electromagnetic compatibility (EMC) behaviour. The device allows the user to program via the SPI the fault current trip levels and duration of acceptable lamp inrush. The device has fail-safe mode to provide fail-safe functionality of the outputs in case of MCU damaged.

Serial to Peripheral Interface (SPI) is a communications protocol developed by Motorola and later adopted by others in the industry. It is a simple 4-wire serial communications interface used by many microprocessor/microcontroller peripheral chips that enables the controllers and peripheral devices to communicate each other.

eXtreme or high side switch devices (Source: FreeScale)

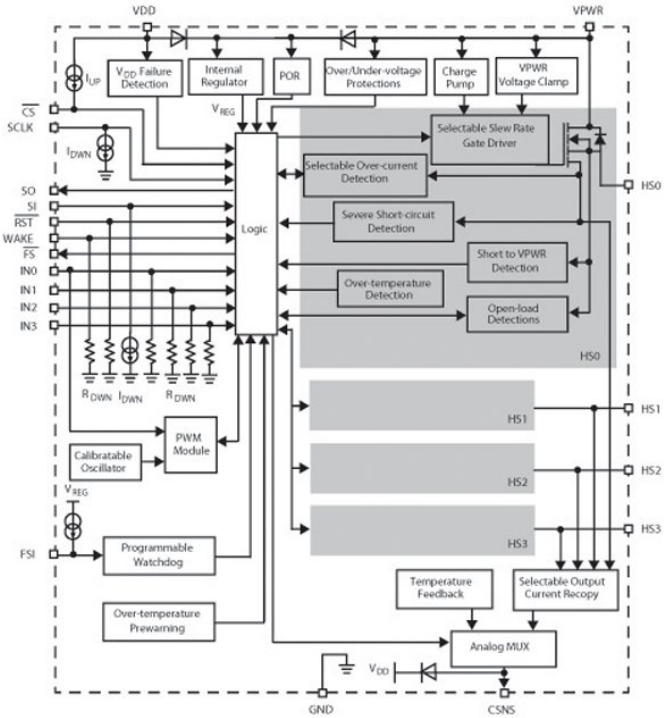

Internal configuration of an eXtreme or high side switch (Source: FreeScale)

Summary This section outlined and showed examples of how central control systems are configured. At first view they can appear complex but actually compared to separate switches and wires and relays for every electrical component on the car, centralization actually simplifies the system as well as making it easy to add new features.

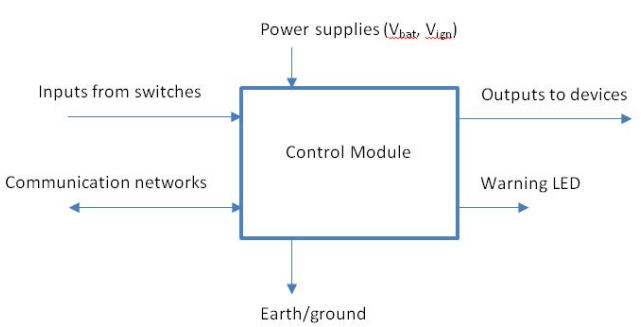

Look back over the previous section and write out a list of the key bullet points here:

Simplified block diagram

Ford generic electronic module (GEM)

Overview On many Ford cars, the GEM is installed under the instrument panel, behind the glove compartment. It controls a multitude of functions in the generic electronics. The GEM is a separate module and does not contain any current distribution section (no fuses or relays).

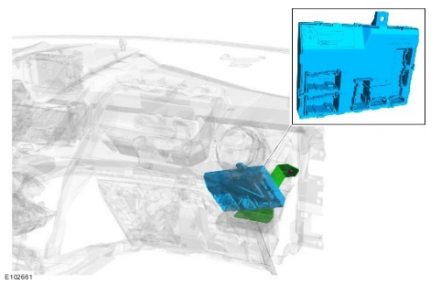

Generic electronic module location (Source: Ford Motor company)

Versions Depending on equipment level, different GEMs are installed in the factory. One of the highest equipment versions supports the following:

- central locking,
- opening/closing function via radio remote control (radio receiver built into the GEM),
- fold-in/fold-out external mirrors,
- ambient lighting,
- automatic light and wiper control,
- anti-theft warning system (perimeter monitoring),
- double locking.

Ford C-MAX

Emergency mode An emergency running mode is also available. If a serious fault occurs in the GEM (a defective microprocessor or failure of the voltage supply for example) the following functions are still maintained:

- dipped beam (will then be switched on every time the ignition is switched on),

- windscreen wipers (only slow speed).

One many vehicles, if the GEM has been changed, the new one will configure itself automatically when the ignition is switched on, after about eight seconds.

GEM from a Ford Mondeo

Service mode Various input and output signals can be checked using the service mode. Service mode is activated as follows (on some cars):

1. turn the ignition off,
2. press the heated rear window switch and keep it pressed,
3. switch the ignition on and then release the heated rear window switch.

The GEM now requests the user to perform a set sequence of different functions (for instance, to operate the warning flashers, the light switch, and the door locking). If the test is completed successfully, a signal tone will be output.

Configuration data The GEM can contain configuration data about the vehicle systems as well as the VIN. This can be backed up before replacement using manufacturer's equipment, the integrated diagnostic system (IDS), to transfer it to the new GEM. In many cases, the system will operate without the back-up in the GEM. However, if the instrument cluster fails, there will no longer be any module configuration data available.

Anti-theft The anti-theft protection of the vehicle is a feature of the GEM. The following perimeter-monitoring components are used:

- door ajar switch,
- engine bonnet switch,
- tailgate switch.

The alarm state of the vehicle is signalled by the turn signal lamps and a horn with its own battery. With the ignition switched off, the anti-theft system is activated about eleven seconds after the vehicle is locked. If the bonnet, tailgate or one of the doors is not fully closed, it can be opened without triggering the alarm. In this case the system is not armed.

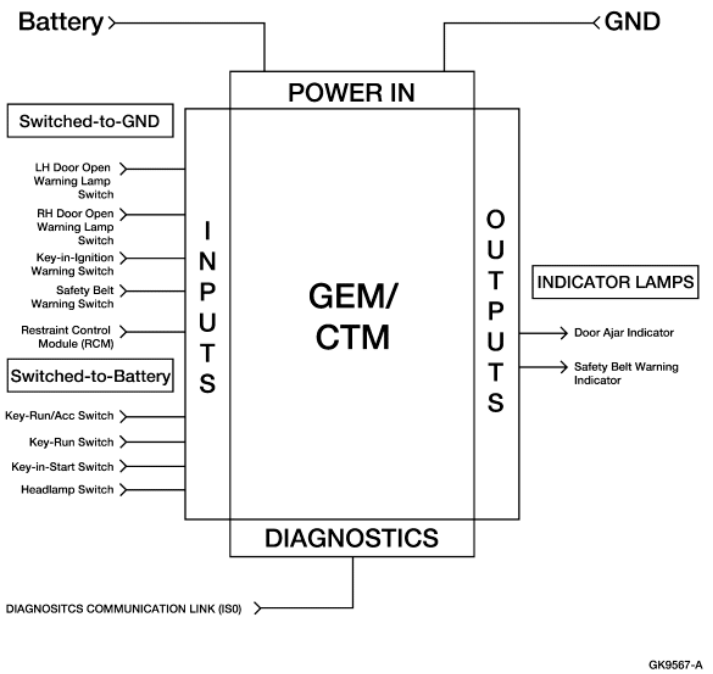

Central locking inputs and outputs are also used by the alarm

Summary This section outlined a system used by Ford Motor Company. It is important to note that you should always access specific manufacturer's data when working on these systems.

Ford Fusion (Hybrid version) USA – Ford Mondeo UK?

Look back over the previous section and write out a list of the key bullet points here:

Service and repair

Routine Maintenance

Scheduled Servicing Scheduled service requirements are often quite simple but none-the-less important. Systems should be checked for correct operation. Adjustments, repairs or replacements are then made if required.

Checking the fuses

Manufacturer Data Obtain data from the vehicle manufacturer's service schedules for the work to be carried out (at the mileage or time interval) during service operation.

Data from service schedule

Non-Routine Work When carrying out routine maintenance, some non-routine work may be found. This should be reported to the driver or owner of the vehicle before repairs are carried out.

One light not working

54. **Worksheet Service** electrical system.

The main task when servicing the electrical system is to ensure that everything works! However, the battery may require further attention, particularly on older vehicles.

Checking the lights

Battery Service If the battery terminals require cleaning, fit a memory keeper and disconnect the earth/ground lead. Clean the battery posts and terminals. Use a wire brush and hot water as required. If hot water is used, follow this with large amounts of cold water to wash away any acid from the paintwork. Dry the terminals and posts and apply a small amount of battery grease or petroleum jelly. If the battery is not sealed, top up with de-ionized water to a few millimeters above the plates. Refit the battery and terminals, and ensure they are secure.

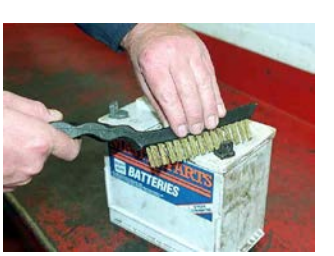

Cleaning the battery terminals

Battery State of Charge Check the battery state of charge using a voltmeter or hydrometer. Recharge if necessary OFF the vehicle. If the battery is not in good working order this should be reported to the customer. Many breakdowns are caused by faulty batteries.

Checking the battery charge

Drive Belt The only item for routine replacement is the alternator drive belt if it begins to show signs of deterioration. A preventative maintenance program would include replacement of the alternator brushes at 60,000-mile intervals. This is the general recommendation of some vehicle and electrical equipment manufacturers.

Replacing a cam belt

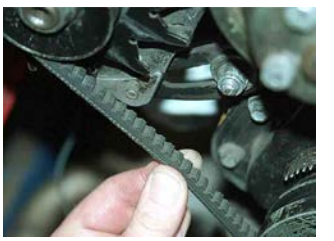
Alternator drive belt

Reporting Faults Report any faults found during service operations to the owner or driver of the vehicle.

Reporting faults to driver/owner

55. **Worksheet** Routine maintenance inspections, lubrication and replacement of parts.

This inspection begins as soon the engine is started so that the vehicle can be driven into the workshop. Observe the ignition/generator warning light for correct operation. Check that it comes on when the ignition switch is turned to the "on" position and that it goes out – and stays out – when the engine is running. Look very closely for a dull light when the engine is revved, which may indicate an internal fault with the alternator.

Starter Motor Operation Listen to the starter motor operation to check both the battery performance and the starter motor and circuit operation. Listen carefully for abnormal noises such as gears grating, uneven operation or sluggish performance. Any of these faults will require further investigation in the workshop.

Listen to the starter motor

Electrolyte Level In the workshop, open the hood and look closely at the battery for electrolyte level and, if necessary top off with distilled water. Check the battery casing for leaks and ensure that the battery is properly fastened to the batter carrier by the battery clamps and that the battery carrier is securely fastened to the vehicle.

Battery electrolyte level

Level marking

Battery Terminals and Cable Terminals Battery terminals and cable terminals are inspected for corrosion, tightness and the condition of the cable where it enters the terminal. Corrosion of the battery and cable terminals occurs when battery acid or acid vapor contaminates the terminals. The corrosion appears as a gray-green coating of the terminal and surrounding area.

Battery terminals should be…

Clean…

Secure…

And tight

Corrosion on the Battery Terminals All corrosion on the battery terminals and surrounding area should be cleaned off using a baking soda and water solution. The terminal contact faces should be cleaned with a wire brush or abrasive paper. After reconnection, the terminals should be coated with petroleum jelly or a brand of anti-corrosion gel.

Cleaning corrosion from battery terminals

Alternator Drive Belt Check the alternator drive belt for condition and tension. Look for aging, damage, frays and polishing of the belt and pulley sides. Adjustment should be to the manufacturer's specifications. As a rule, this allows a free play of about half an inch, or 12 mm, on the longest section.

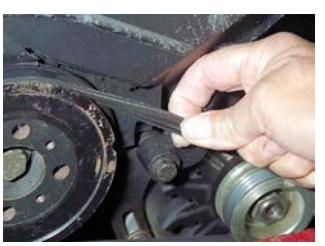
Checking the alternator drive belt for condition and tension

Cable Condition Look carefully at the electrical cables for the alternator and the starter motor for security, condition and routing.

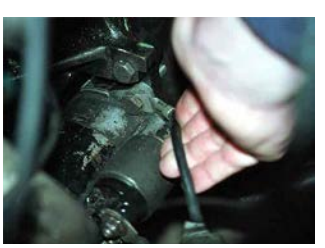
Checking the cables insulation and termination security

Alternator Noises Run the engine and listen for abnormal noises from the alternator. A whine or screech would indicate bearing wear, misalignment of the rotor spindle, or a loose drive belt.

56. **Worksheet** Check battery and charge circuit operation for winter usage of vehicle.

Battery

These checks have been covered in the Checking System Performance, and each of the checks for the battery and starting and charging systems should be carried out. These procedures need to be carried out carefully to ensure satisfactory performance during the most extreme weather conditions.

General Electrical Service Check the fuse box for security and that spare fuses are fitted. Carry out a general inspection looking for loose connections and damaged wires. This check is for potential problems and can save your customer a lot of trouble.

Electrical System Operation Run through ALL the electrical systems in turn to check for correct operation. Make sure that simple items such as the washer fluid bottle are secure and topped off.

Checking the lights

Washer fluid bottle

57. **Worksheet** Checking operation of the main instruments and warning lights.

Instruments and warning lights

This is a simple but important task. Instruments and warning lights, when operating correctly, can prevent breakdowns and damage. The first step is to switch the ignition on. However, do not start the engine at this stage.

58. **Worksheet** Check all vehicle lights for correct operation.

Turn signal operating

This is a simple check carried out as part of all services. However, it is a vital safety aspect. Check lights for correct operation, color and flash rate where appropriate. Turn signals should flash between 60 and 120 times per minute.

Lighting Operation It is necessary to use an assistant when checking lights. It will be necessary to switch the ignition on for some of the lights to operate. Remember to check instrument and interior lights.

Headlights

Lighting Colors Regulations relating to different light colors vary in different parts of the world. However, most are similar and are summarized as follows:

Headlights – white, yellow, blue/white

Turn signals – amber (UK), red/amber (US)

Sidelights – white

Rear lights – red

Brake lights – red

Reverse lights – white.

Stoplights

Type of Light The type of light emitted is either described as a beam or diffused. Headlights and auxiliary lights emit beams. All other exterior lights emit diffused, or non-focused light. This is to prevent other road users being blinded.

Spotlight

59. **Worksheet** Check all vehicle lights for condition and security.

In addition to operating correctly, vehicle lights must be secure, clean and in good condition. Lenses should be free from cracks and damage. Reflectors should be clean and free from corrosion.

Lights in good condition

Headlights Cracks in the lens of a headlight, or corrosion of the reflector, can cause a disruption to the beam emitted. In some countries, any crack makes the lights illegal. Generally, corrosion will prevent correct operation and the reflector of the light unit should be replaced.

Damaged headlight lens

Rear Lights No white light should be emitted from the rear of a vehicle except when reversing or intending to reverse. Check carefully for cracks in the lenses of all the rear lights.

Damaged rear light lens

Ignition On Tests With the ignition on, check that the rev-counter and speedometer both read zero. In some cases, they will read below the zero when at rest. Make sure that the oil pressure and charge warning lights are on. The fuel gauge should read appropriate to the level of fuel in the tank. The temperature gauge should read appropriate to the engine temperature. It is best to start these checks with the engine cold if possible.

Gauges

Engine Running Tests Check for neutral or park, and start the engine. The oil light and charge light should go out as the engine revs. They should then stay out at idle speed. Check that the rev-counter reads correctly. If necessary, this can be done by comparing it with a test meter reading. The fuel gauge reading should remain constant and the temperature gauge should rise to 'normal' level.

Road Test A road test is the best way to check the speedometer operation. However, this will usually be part of a service and many other aspects should be considered. If you are not qualified to drive the particular vehicle, then go along as a passenger. You can then instruct the driver on what to check.

60. **Worksheet** Check operation of vehicle map and trip computer.

Many vehicles are now fitted with a map, which is like a plan view of the car, showing lights and doors. Trip computers are useful for keeping a check on fuel consumption and journey times. Most have a mode switch to change between UK, US, and metric units. Refer to the vehicle handbook, as necessary, for specific details.

Trip computer

Static Tests To check the map operation, the ignition may need to be on. First, switch all of the lights on in turn and check the operation of each map segment. Next, open all the doors in turn and again check that their segments illuminate. Switch ignition off and then back on. Note self test for ice warning if it is fitted. A large snowflake should flash!

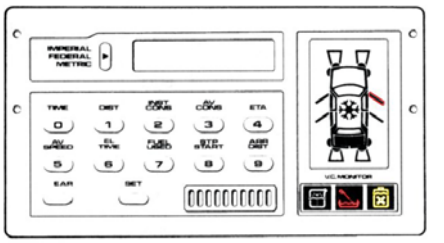

Vehicle map and trip computer

Running Tests Check all the basic functions of the trip computer. The main ones are: time, date and stop watch. Set a journey distance into the unit. Road test the car and note other functions such as average speed, estimated time of arrival, fuel consumption and elapsed time. Reset all when the test is complete. Make sure that the correct units (miles/kilometers) are set.

61. **Worksheet** Service body electrical system

This is a simple service operation, but it is important that the steps are carried out correctly. One of the first things is to check washer and wiper operation. Top off the washer fluid as required and don't forget to use a suitable additive.

Body Electrical Systems Inspect the wiper blades and recommend replacement as appropriate. Adjust and clean washer jets as required. A pin is often useful for this. Check the operation of the audible warning device – the horn should make a noise when the button is pushed! Carry out a quick check of all body systems. Check windows, door locks and sunroof for smooth operation (electric or manual).

Wiper blades

Horn

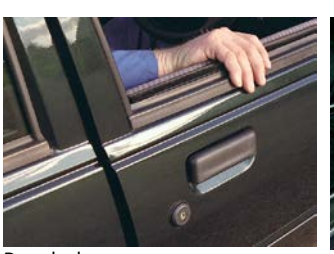

Door locks

Mirrors

Supplementary Restraint System Switch on the ignition and make sure all warning lights operate. In particular, check the supplementary restraint system (SRS) light. Be sure that it goes out when the engine starts. Inspect all air-bag positions for security.

SRS warning light

Drivers airbag position

Passenger airbag position

Side airbag position

ICE System Check the ICE system antenna for security. Test the ICE system by listening to each speaker, one at a time. Make sure you reset the unit to the customer's preferences. A great looking. Pioneer system shown here. The system has an Organic Electro-luminescent Display (OED).

62. **Worksheet** Service/Check seatbelt operation.

Caution: Some seatbelts incorporate tensioners that operate in the event of a collision. Do not attempt to dismantle these systems without referring to the manufacturer's data. Check for twisted webbing due to incorrect alignment. Adjust as required.

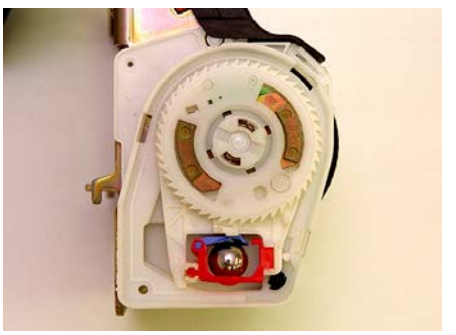
Seatbelt lock mechanism

Seat Belts Fully extend each belt in turn and inspect the webbing. Look for cuts, damage, broken threads, color fading and bowed webbing. If any damage is noted, the belt should be renewed. Follow the manufacturer's procedures for this process. If the belt will not extend, check for contamination and twisting.

Safety Belt Operation Insert the tongue of each belt into its buckle. Pull hard to make sure it locks in place. If there is doubt about whether it is locking properly, follow the manufacturer's procedures for replacing. Push the button to make sure the belt releases from the buckle easily. Pull each belt in turn fully out and make sure it retracts. It is acceptable to guide the belt home and prevent twisting. However, the spring should pull the belt into its fully retracted position.

Seatbelt buckle operation

Friction and Inertia Belt Locks Pull sharply on each belt in turn to check that it locks up. Drive the vehicle in an area away from other traffic, and brake sharply from about 10 mph (16 k/h). The driver's belt should lock and hold you in position. Use an assistant to help check the other

Summary These tasks will normally be carried out as part of a general service. If extra work such as damage or incorrect operation is noticed, this should be reported to the customer.

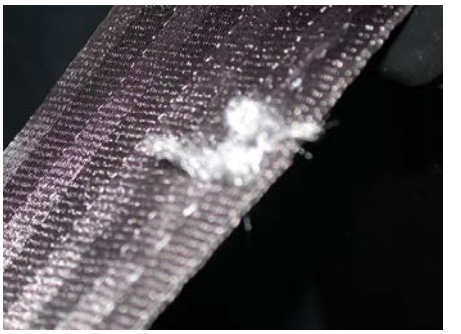
This belt should be replaced

Read the previous section again and note down some key bullet points here:

-
-
-
-
-

Remove, Replace, Strip and Rebuild Components

Introduction Some electrical components, such as the battery, are quite easy to remove and replace. However, some systems are more complex and special procedures are required. The instructions in this section are intended as a guide. Details must be obtained from other sources before work is started.

63. **Worksheet** Remove and refit electrical components

This worksheet is generic and can be applied to many systems. However, refer to manufacturers' procedures for specific information. Fit a memory keeper to prevent changing stored settings in electronic control units and in car entertainment systems. Remove the battery earth/ground lead.

Battery earth lead being removed

Component Removal To remove the battery, disconnect the supply connection, remove the casing clamp, and remove the battery. Take care to keep it level so that no electrolyte (sulfuric acid) is spilt. For other components, disconnect their supply wires. Making a note or suitable sketch of the connections will save time when refitting.

Removing the battery

Access to Components For some components, it may be necessary to remove other parts to allow easy access. For example, an exhaust shield may need to be removed before the alternator can be disconnected. Disconnect linkages and/or peripherals. Undo all mountings and remove the unit from the vehicle. Refitting is usually a reversal of the removal process. Remember that the **last** job is to reconnect the battery earth/ground lead.

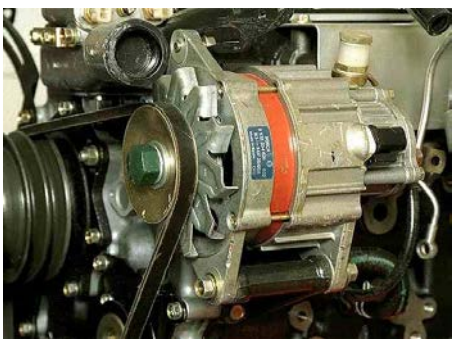

Alternator may need to be removed

Lifting Batteries A clamp for lifting batteries is available and is commonly used in some workshops. This consists of a pair of grip faces arranged below crossing arms. One arm is fitted with a lifting handle and the act of lifting uses the battery weight to clamp the arms together. Be careful when using this lifting tool, making sure that the battery casing is not pushed inward. This can cause the casing to break and the acid to leak out.

Battery lifting clamp tool[5]

Test and Diagnostic Equipment There is a range of meters and specialized test and diagnostic equipment to check components and systems. These are covered in the Checking System Performance and the Diagnostic sections of this program.

Snap-on multimeter

Removal of Starters and Alternators The removal and stripping of alternators and starter motors usually requires attention to sequence. Therefore, it is important to follow the manufacturer's instructions when carrying out any tasks. Many replacements are generally straightforward. However, in some cases, exhaust manifolds, or even engines, may have to be removed to gain access to alternators or starter motors. Follow the instructions in the appropriate learning programs when these additional operations are necessary.

64. **Worksheet** Remove and refit battery, battery cables and securing devices.

First, turn off all electrical systems, including the interior lights. These will stay on if a door is open. The battery is usually fitted in an accessible position in the engine compartment, and removal is a straightforward task.

Turn off…

…all systems

Memory Saver Where disconnecting the battery may cause a loss of memory in electronic control units, a “memory saver” battery pack can be connected through the cigarette lighter socket.

Fitting a memory saver

Battery Cables Always undo and remove the battery ground cable first. This is the negative terminal on modern vehicles. Some very old vehicles have a positive ground. Disconnect the positive cable and tuck the cables out of the way of the battery.

Removing the earth lead

Battery Terminals Whenever loosening a battery terminal bolt, always support the terminal to prevent the battery post from bearing the force. Clamp-type terminals can be undone and eased apart with a screwdriver or pulled off with a small puller.

Undoing the battery terminal

Removing a clamp type terminal

Battery Clamps Undo and remove the battery clamp. Some batteries are fitted with a hold- down clamp on the base of the casing. The clamp should be undone and removed so that the battery can be pulled over to release the other side. Where a bar is fitted to the top of the battery and held in place by two threaded rods, be careful that the clamp does not make contact with the battery terminals. A short circuit across the battery terminals may cause an explosion.

Removing a battery clamp

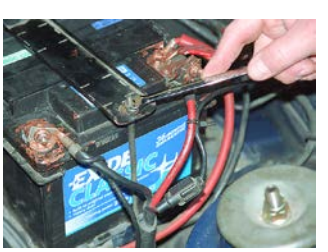
Removing a battery ‘rods and clamp’ securing device

Battery Removal Lift the battery from the carrier using a safe lifting technique. Using equipment that is appropriate to the weight of the battery may be the best method. Some batteries can be heavy and awkward to lift, so it is important to be aware of the weight. Also consider the route of removal to get the battery to a safe resting place away from the vehicle.

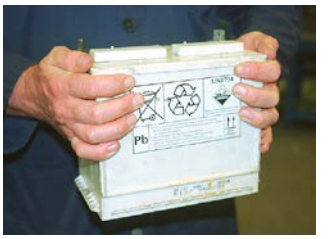
Lifting and removing a battery

Caution! To avoid spilling acid, keep the battery in an upright, level position. If acid is spilled, rinse the affected area with plenty of water.

Take care!

Battery Tray The battery carrier and under-battery tray should be checked for corrosion and security. Often a drain tube has been fitted to the tray. Checked to make sure that it is not blocked.

Checking battery carrier

Battery Replacement Replacement is a reversal of the removal process. When fitting a replacement battery ensure that the ampere-hour rate, the external dimensions and the position of the terminals are correct. Look carefully for polarity when checking the terminal positions. Check that the battery is secure and do not over tighten the battery clamp.

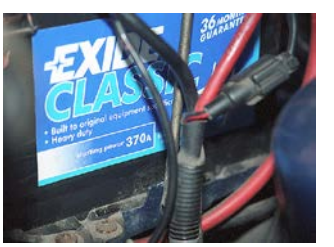
Match details when replacing with a new battery

New Battery Cables New battery cables can be bought as complete components or they can be made up from cable terminals. All replacement cables should have the same (or more wire strands of similar cross-sectional area) than the original. In all cases, they must not be less than the specifications for the vehicle.

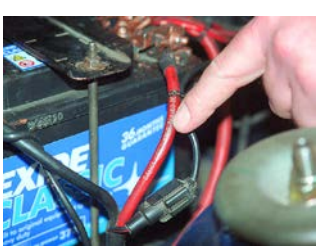
Battery cables

Reconnecting the Battery When reconnecting the battery cables, fit the feed cable first and the ground cable last. Check that no short circuit exists by touching the ground terminal to the battery to see if there is arcing. A very small arc may be visible when a clock or permanent supply is reconnected.

Arcing Any large arcing should be investigated before the battery is finally connected and the terminals tightened. Finally, coat the battery terminals with petroleum jelly.

Danger!

65. **Worksheet** Remove and refit drive belts and pulleys.

Disconnect the battery ground cable when working on potentially rotating components.

Earth lead is always removed first

Take care of rotating fans

Drive Belts This task may be straightforward or complicated depending on the type and location of the drive belt or belts. If two belts are fitted side by side, both belts should be replaced at the same time. For light vehicle applications, a vee or 'multi-vee' drive belt may drive the water pump and the alternator.

Belt tensioner

Belt Removal To remove the belt, loosen the adjusting strap or tensioner and, if adjustment is made by movement of the alternator, loosen the alternator retaining bolts. The alternator should swing in to allow sufficient slack in the belt to help removal.

Tensioner strap

Alternator retaining bolts

Belt Replacement Replacement is carried out in the reverse order. A new belt should be adjusted to the minimum of the allowable tolerance. Adjustment is made by pinch tightening the securing bolts so that the tensioner can be moved, but stays in place. When the correct tension is obtained, tighten the securing bolts and recheck the tension.

Belt tension strap and bolt

Serpentine Belts Where serpentine belts are used, it is important to follow the manufacturer's instructions when removing, replacing and adjusting drive belts.

Serpentine belt

Alternator Pulleys In order to remove the pulley on an alternator, it often is necessary to remove the alternator itself. The pulleys are held with a securing nut and located with a woodruff or slotted key in the spindle and pulley.

Alternator pulley woodruff key

Pulley Nut Removal To undo the nut, insert a wrench, such as a hex, Allen or torx, in the end of the spindle and use a wrench on the securing nut.

Pulley nut and spindle held with an Allen key

Pulley Holding If you have difficulty finding a way to hold the spindle, try holding it an old V-belt clamped in a vice. Alternatively, use soft jaws in the vice and clamp the pulley carefully.

Holding a pulley in a vice

Drive Key To remove a woodruff key from the spindle, knock in one end so that the key rotates out of the slot. Then lift with a pair of side-cutting pliers. Adjust a new key for fit with a suitable file. Refit the key, pulley and securing nut and tighten to the specified torque.

Woodruff key

66. **Worksheet** Remove and refit alternator. Strip and replace brushes, regulator and diode pack (if possible).

Label and disconnect the cables on the alternator. Remove the adjusting and securing bolts and lift out the alternator. Remove the drive pulley, if required, to strip the alternator.

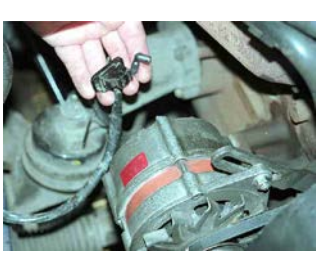
Alternator terminal wires

Brushes The rotor windings are connected by carbon brushes running on slip rings. These wear in service. Depending on the type of alternator, the brushes either are a separate part or incorporated with the regulator. Follow the alternator manufacturer's instructions to replace these parts.

Brushes and regulator

Slip Rings Once the brushes have been removed, the slip rings can be inspected. If they are blackened with old carbon deposits, clean with a soft cloth and alcohol.

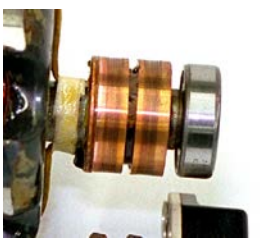
Inspecting the slip rings

Rectifier Pack The rectifier diode pack is located in the back of the alternator and is usually soldered to the stator and regulator terminals. Where a new part is available, the old unit must be unsoldered, and the connections on the new unit soldered to the internal connections. Great care is required to ensure that the diodes are not overheated. A heat sink may be necessary on each joint between the soldered joint and the diode. This is the reason these types of alternator repairs are generally carried out in specialized workshops.

67. **Worksheet** Remove and refit pre-engaged starter motor strip and replace solenoid.

Disconnect the battery ground cable. Disconnect the main feed cable to the starter motor at the most convenient point. This may be on the starter, a cable junction or on the battery. Disconnect the feed from the starter switch on the solenoid.

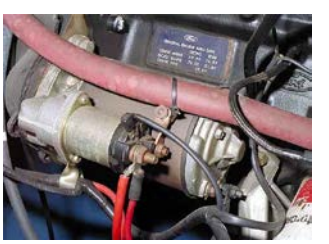
Starter motor cables

Securing Bolts Locate the securing bolts and any support bracket bolts. Look for spacers between the motor and the mounting point. Check a workshop manual for any special instructions. Decide on the best route for removal of the motor so that it is not restricted. If any parts, such as exhaust manifolds, have to be removed, follow the instructions in the appropriate learning programs and manufacturer's manuals. Finally, undo and remove the securing bolts. The starter motor can be heavy and care is needed when lifting or lowering from the vehicle.

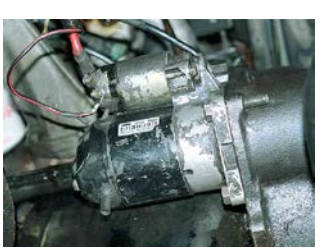
Starter motor mounting bolts

Starter Solenoid The solenoid is fitted on top of the starter motor. A short cable or strap makes electrical connection from the solenoid switch contacts to the motor. Undo the securing nut on the solenoid terminal, making sure that the terminal does not rotate, and pull the cable away from the solenoid.

Solenoid to motor connecting strap

Solenoid Removal The solenoid may be removable without disconnecting the pinion pre-engagement lever, but this is not always possible. Follow the manufacturer's instructions for this part of the task. The solenoid is held onto the motor drive pinion housing with two or three bolts. These need to be removed to allow the solenoid to be lifted from the motor.

Removing solenoid nuts…

Connecting cable…

Main assembly…

Plunger

Solenoid Plunger A plunger inside the solenoid is connected to the pinion pre-engagement lever. This may need to be unhooked (or the retaining pin removed) to allow removal of the solenoid, complete with the plunger.

Check the solenoid plunger

Starter Pinion When the starter is off the vehicle, it is possible to check the condition of the pinion gear teeth, the unidirectional clutch, and the teeth on the starter ring gear.

Starter Motor Brushes A cover can be removed to inspect the motor brushes or, if a cover is not fitted, the brush end plate can be pulled out by removal of the through bolts.

Inspecting the brushes

Bushes With a full strip of the motor, the bearings (or bushes) in the end plates can be checked. These are usually small, phosphor-bronze, oil- impregnated bearings. Replace these bearings if they are worn.

Lubricating the Bushes Lubricate a new phosphor-bronze bush by holding it on the end of a thumb, filling it with engine oil, and then squeezing. The oil will seep through the walls of the bearing. Fit the bearing after lubrication. Existing bearings just require a drop of oil in the normal way.

68. **Worksheet** Remove and refit power distribution circuit cables/components to the main fuse box.

Battery connections and fusible links

Fuse box

69. **Worksheet** Remove and refit starter motor circuit cables/components.

70. **Worksheet** Remove and refit alternator circuit cables/components.

These systems use a wild range of cables sizes. Any replacement of cables must be with a size and type that is capable of carrying the expected maximum current.

Cables and Components Because these cables and components are in the engine compartment, it is important to ensure that they are secure and routed away from hot engine and exhaust components. They must also have sufficient slack where they bridge from the engine to the vehicle body. Tight cables are liable to become damaged because of excess bending near the terminals or other fixed points.

Routing of cables for protection from sharp and hot objects

A tight cable is broken by fatigue fracture if it is too tight

71. **Worksheet** Remove and refit headlight unit.

Headlight units will require replacement if they are damaged or water has contaminated the reflector. Some manufacturer's supply parts, but most require that the complete unit be replaced. Take care not to damage the headlight unit or the vehicle bodywork when carrying out this task.

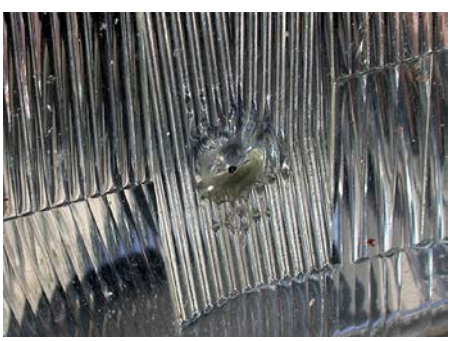
Damaged headlight lens

Headlight Unit Removal Fit a memory keeper and disconnect the battery ground lead. Next, remove covers as required and disconnect the wires that feed to the light unit. Remove the grill and/or trim as necessary to gain access to the light unit fixings. Undo the screw, bolts or clips and carefully remove the light unit from the car.

Light unit

Headlight Unit Refitting Refitting the light unit is a reverse step of the removal process. Take care not to scratch or damage the lens. Note that some manufacturers require special contact grease to be applied to the terminals. This makes for a good electrical contact and keeps water out.

Headlight supply wires and terminals

Alignment New light units should be factory set close to the correct value. However, check and adjust the alignment before returning the car to your customer. This procedure is covered in the following section. Whenever light units have been removed or adjusted, always double check that all the other lights are working correctly.

Beam setter in use

72. **Worksheet** Remove and refit steering column multifunction switch.

Methods for this task vary; so always check manufacturers' recommended procedures. It is easy to break plastic trim if forced incorrectly. Often, several screws are used and padding material is fitted to reduce squeaks and rattles!

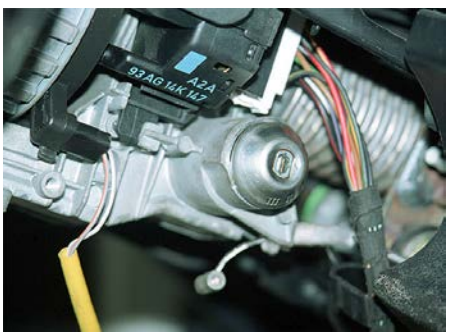

Switch connections under the steering cowling

Multifunction Switch Removal Fit a memory keeper and disconnect the battery ground lead. Remove the steering wheel (if necessary). Take particular note of procedures if an air bag is fitted. Undo the screws and remove the plastic cowling. If the steering column is adjustable then part of this mechanism may also need to be removed. Disconnect the multiplug from the switch unit. Undo the retaining screws and remove the switch from the steering column.

Switch in position

Multifunction Switch Refitting Refitting is a reversal of the removal process. Torque the steering wheel nut to the manufacturer's specified value. Double check that all the cowling and shrouds are refitted correctly and that the self-cancel mechanism switches off the turn signals as the steering is turned.

Switch unit

Checking All Lights When a job has been completed, which involved removing connections to a number of circuits, it is very important to double check that all the lights, and the horn in this case, are working correctly.

These lights work!

73. **Worksheet** Remove and refit flasher unit.

Note that if the left or right turn signals, or the hazards work, the unit is probably functioning correctly. Remember that a flasher unit is designed to flash at a different rate when a bulb is blown.

Turn signal operating

Flasher Units Flasher units are usually located either as part of the fuse box or on the steering column. Remove covers or shrouds as necessary to gain access. Most types of flasher unit simply pull out of the socket. Replace by pushing the new unit into the holder. Make sure the new unit is the correct one for the vehicle. More powerful units may be required if a towing socket is fitted. After replacing, make sure all turn signal lights and the hazard lights operate correctly.

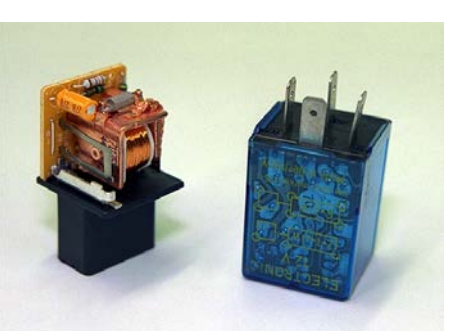

Electronic units

74. **Worksheet** Remove and refit temperature sender/sensor unit (thermistor).

Before starting work, fit covers as required to keep paintwork clean. Note that when renewing temperature senders, several types are used that differ internally, but they look the same externally. Check with manufacturers' data to be certain.

Temperature sender in position

Temperature Sender Remove the cap from the coolant header tank (vehicle must be cold) and then replace it. This will ensure that there is no pressure in the system and will minimize coolant loss when the sender is removed.

Header tank cap

Remove the Sender To remove the sender, first disconnect the wire or wires. Prepare the new unit for installation by applying sealant to the threads. Follow manufacturers' guidance. Remove the old sensor from the engine and replace with the new one immediately. This will ensure only a small amount of coolant is lost. Torque to the specified value and then reconnect the wires.

Sensor removal

Check Gauge Operation Top off the cooling system to the correct level. Start the engine and run it up to normal temperature. Check for correct gauge operation as the engine warms up. Finally, check the sender for leaks.

Coolant should be between these lines

75. **Worksheet** Remove and refit speedometer cable.

Fit a memory keeper and disconnect the battery ground lead. This will ensure no short circuits are caused. Refer to manufacturers' procedures for removal of the instrument panel and cable.

Speedometer cable connection

Speedometer Cable Remove the instrument panel and disconnect speedometer cable from the head unit. Disconnect the cable from the gearbox. Release any clips as required and remove the cable. If the cable runs through a complicated route, attach a string to one end and pull it through as the cable is removed. This will help when refitting the new one.

The cable runs along the bulkhead on this car

Cable Drive Mechanism Remove the driven gear (speedometer drive gear) from the gearbox and check for wear. Replace this component if required. Refit the new cable and make sure it is secured in the clips as necessary. Refit the instrument panel.

Cable drive and speed sensor assembly

Check for Correct Operation Make sure all parts such as the steering wheel are clean. Double check that the instrument panel and any plastic components are secure. These components are prone to vibration and rattling. This does not sound serious, but it is very annoying for the driver! Check for the correct operation during a road test.

76. **Worksheet** Remove and refit fuel tank sender unit.

Fit a memory keeper and disconnect the battery ground lead. Support the vehicle on a suitable hoist. To access and remove some fuel senders it is necessary to drain fuel from the tank using special equipment. Disconnect fuel lines and filler components as required. Remove the fuel tank if necessary. However, many senders are accessible without removing the tank, so check manufacturers' data.

Fuel tank drainer

Fuel Tank Sender Unit Remove the wires from the sender unit and then undo the ring of bolts. Remove the sender carefully, so as not to damage it. Some cars also use the sender as a fuel pick up point. In this case, a pipe is incorporated into the unit.

Sender showing full…

…And empty

77. **Worksheet** Remove and refit windshield wiper motor.

Note: This is a generic procedure for a motor that can be accessed from the engine compartment. Refer to the specific manufacturer's instructions. Switch off the ignition. Mark the position of the wiper blades with masking tape, and remove the wiper arms. Raise the hood and remove the rubber strip and/or covers from the heating/ventilation system area. Remove wiper motor's cover panels. Remove retaining screws as appropriate and remove the wiring harness plug from the motor. Unscrew the large nut on the wiper spindles. Loosen and remove the motor-mounting bracket screws.

Removed covers

Wiper plug

Wiper spindle

Mounting bracket

Wiper Motor Maneuver the motor and drive linkage out from its fittings, and remove from the vehicle. Undo the nut on the wiper spindle after marking the position of the crank arm. Unscrew the motor fixing bolts and remove the motor. Refitting is a reversal of the removal process. However, note the following points: Connect the motor to the harness and run it (without the linkage) until it stops in the 'park' position as normal. Disconnect from the wiring. Refit the crank and linkage exactly as it was removed.

Removing the motor

Wiper Linkage After refitting the motor and linkage, run the motor and make sure the movement is correct BEFORE refitting the arms and blades. Finally, fit the arms and blades, wet the windshield and check for correct operation at all speeds and settings. Check that the blades 'park' correctly.

Motor in the park position

78. **Worksheet** Remove and refit central door-locking actuator.

Disconnect battery

Remove trim

Note: This is a generic procedure; refer to the specific manufacturer's data for detailed instructions. Fit a memory keeper and disconnect the battery ground. Remove the interior door handles, lock lever covers, window winder and plastic boxes, etc. as required. Using a flat-forked lever under the plastic clips, remove the interior door trim panel.

Door Locking Actuator If fitted, remove the plastic waterproofing cover. Be careful not to tear this or be prepared to replace as required. Make sure the window is fully closed to allow access into the door cavity. Note: The inside edges of the door structure are often sharp. Wear protective gloves as necessary.

Sharp – take care

Tracing the Circuit Trace the wires from the lock actuator and disconnect the multiplug. On some cars, this is part of the actuator, but on others, it may be inside the sill area or even under the carpets beneath the seats. Unscrew the actuator fixings and unhook it from the pull rod. Remove the actuator from the vehicle. Refitting is a reversal of the removal process.

Disconnect wires

Undo securing screws

Unhook actuator

Remove from door cavity

Summary There are many 'remove and refit' task on the electrical system. Most are quite simple, after you've had some practice and gained experience. As usual, refer to the manual for specific instructions. You don't need to know everything – just where or how to find out everything!

Read the previous section again and note down some key bullet points here:

-
-
-
-

Fault diagnosis

Checking the System

Introduction System performance checks are routine activities that occur during all servicing work. They start at pre-delivery and continue for all scheduled service intervals.

Systems need checking regularly[2]

79. **Worksheet** Check electrical circuits.

The following procedure is a generic test sequence that is useful for checking any electrical circuit on a vehicle. First, carry out 'hand and eye checks'. This means looking for loose wires, loose switches and other obvious problems. Always make sure all connections are clean and tight. Check that the battery is at least 70% charged.

Checking the system

Electrical Circuits Check any motor linkage, bulbs, solenoids, etc. for security and general condition. Test the fuse continuity but do not trust your eyes. Check for a voltage at both sides with a meter or a test lamp. If used, check that the relay clicks. Note that this means although the relay has operated, it is not necessarily making contact.

Testing a fuse in position

Voltage Supplies Check the voltage supply to the switch. It should be battery volts, and when operated the supply from the switch, should be battery volts. The supply from the switch to the relay should be battery volts but note that on some systems, ground switching is used. The readings should therefore be zero volts. Alternatively, check from the battery positive terminal to the switch and it should read battery volts. The feed out of the relay, when it has operated, should be the same as the feed in to it.

Checking a voltage supply

Component Connections The final voltage supply to the motor, bulb, or whatever is being operated should be within about 0.5V of the battery voltage. The earth or ground connection should have a continuity of 0 ohms or a voltage of 0V.

Check the earth or ground connection

Summary The procedure outlined over the last few screens is generic. In other words, it is designed so that with some modification it can be applied to most systems. Of course, where manufacturers' procedures are available, they should always be followed.

Cranking Performance When the engine is being started, it is possible to check the charge warning- light operation and listen to the operation of the starter motor. Whenever any fault is suspected, further checks and diagnostic tests should be carried out.

Warning lights

Early Diagnosis A defective battery or charging system will often lead to a vehicle breakdown. This can be prevented by early diagnosis of a developing problem.

80. **Worksheet** Inspect the condition of the battery, the state of its charge and that it is securely fastened to the carrier and the vehicle itself. Fast and slow charge batteries.

Vehicle battery

The battery is one of the most important components on the vehicle. Checks of the battery need to be carried out carefully. Batteries are heavy and filled with a corrosive acid. Fire can result from electrical short circuits or from ignition of the gasses that are produced during charging.

Battery Condition Open the hood to see the battery. Look all around the battery to check its general condition. Look at the battery casing for cracks, leaks, abnormal shape and cleanliness.

This terminal needs cleaning

Battery Security Check the condition of clamps or other holding devices and make sure the battery is securely fastened to the battery carrier. Look around the battery for signs of acid damage or corrosion.

Battery security clamps

Terminal Corrosion Look at the terminals for corrosion, which is an indication of acid or vapor escaping from the battery. Where acid has leaked from the battery or been spilled on the vehicle, remove the battery and wash the affected areas. Use lots of water for this task. Any damage to the paintwork also will need to be fixed.

Check terminals for corrosion

Clean and apply battery grease

Electrolyte Level Remove the cell caps and check the level of the electrolyte. Do not rely on what you can see by looking through the transparent casing. It is possible for these to stain and give a false impression of the electrolyte level.

Check battery electrolyte level

Hydrometer Test If it is possible, carry out a hydrometer test for relative density before topping off the battery. If necessary, top off with water specially prepared for batteries. Distilled and de-ionized water are recommended. Tap water or rainwater should not be used.

Hydrometer test

Topping up

Terminal Corrosion The general recommendation is that the battery terminals should be checked and cleaned regularly. Naturally occurring lead oxide forms on the surface of the terminals and battery posts. This oxide acts as an insulator and restricts the current flow to and from the battery. The terminals and the battery posts can be cleaned with abrasive paper or a wire brush.

Cleaning terminals

Secure Contacts A clean, metal-to-metal, and tight joint on battery terminals is necessary for effective electrical current flow. To keep terminals clean while in service, it is recommended that they be coated with a petroleum jelly or proprietary battery grease.

Terminals with battery grease

Cable Terminations Check the battery cables for tightness, corrosion and breakage of individual strands of wire, particularly close to the cable terminations. Look closely at the ground cable's connection to the vehicle body.

Checking the battery cables for tightness and condition

Earth Connection If any problems occur at the ground point, clean the terminal and the point on the body where the connection is made. Fit an internal star-lock washer on reassembly in order to make a good electrical joint.

Earth or ground cable

Cables and Connections Finally, make a careful check of all cables connecting the battery to the alternator and the starter motor, and check the condition and tension of the alternator drive belt.

Alternator cables to battery

Starter cables

Battery State of Charge The battery state of charge can be checked with a hydrometer or a voltmeter. A hydrometer is an instrument that takes a small quantity of electrolyte from each cell. This lifts a calibrated float to give a reading of the specific gravity (relative density). A rubber bulb on the top of the hydrometer is depressed before the pick-up tube is put into the cell. Once the tube is below the electrolyte level, the bulb is released to draw a sample into the hydrometer.

State of charge checks with a hydrometer

State of charge checks with a voltmeter

Hydrometer Reading The reading is taken from the float, where it aligns with the surface of the sample. A fully charged battery should have a relative density reading of about 1.280. All cells should be within 0.01 to 0.02 of each other. A partially charged battery should be recharged before carrying out any further tests. Any large variation between cells will indicate defects in individual cells and will usually require replacement of the battery.

Hydrometer readings…

Discharged…

Half charged…

Fully charged

Maintenance-Free Batteries Maintenance-free batteries, with a built-in hydrometer, show a green dot when charged, a black dot when partially charged and a yellow dot when an internal fault exists. If a yellow dot is visible, do not attempt to charge the battery or connect another battery for jump-starting. Likewise, do not use a fast battery charger with an engine starting facility.

Maintenance free built in hydrometer

Voltage Tests A conventional battery in good condition will have a voltage of 12.6 or more – when fully charged. A maintenance-free battery may be slightly lower on average but not less than 12.6 volts. The voltage is checked with a digital voltmeter connected across the battery terminals. Make sure that the polarity of the meter matches the polarity of the battery. The off-load and partial-load voltages should not vary by more than 1 V. A partial load can be applied by turning on the vehicle headlamps.

Battery voltage readings…

Discharged…

Half charged…

Fully charged

Discharge Tester A battery-heavy discharge test is carried out to check the ability of the battery to provide a high current over a short period. The discharge test draws a very high current. Therefore, it should only be carried out on a fully charged battery. The test time is usually about 10 seconds. However, the time specified by the individual tester should not be exceeded.

Blow away any hydrogen gas before starting the test

Battery heavy duty discharge test

Discharge Test Settings The setting for discharge can be adjusted on some types of testers. This is usually set at three times the amperage of the ampere-hour rate (Ah) of the battery. The test current for a 40 Ah battery would, therefore, be set to 120 A.

A good battery under test

Test Procedure Connect the test cables or probes firmly across the battery terminals. Switch on or connect the tester for the time specified. During the test, read the voltage from the gauge. Typical readings are between 9 V and 11 V depending upon the capacity of the battery. The voltage should be maintained for the period of the test. Compare with the specifications provided with the equipment. If the battery voltage falls below 9 volts, discontinue the test. This indicates that the battery is no longer serviceable.

For most car batteries the voltage should hold at 9 or 10 V for 9 or 10 seconds

Volt-Amp-Tester To test a battery more thoroughly, it is now preferred to use a volt, amp tester (VAT). There are many variations on the market; however, this section will outline just one type. Snap-on produce a compact and very useful tester called the MicroVAT. This equipment will carry out a range of diagnostic tests. The device, as with many similar types, will do not only battery condition tests, but also tests on the charging and starting system.

This VAT takes advantage of new impedance/ current test technology to detect the full range of battery failure modes including bad cells, sulphation, internal short circuits, and other chemical and physical failures. Testing takes less than 5 seconds and will even work on batteries discharged down to as low as one volt.

MicroVAT (Source: Snap-on)

Key features of a VAT The MicroVAT uses a fan cooled 50 A load and integrated amp probe to test the quantity and quality of alternator output with an alternator ripple test. Many late model computer-controlled charging systems virtually shut down under no load conditions. Diagnostic tests that can be carried out with this tester, when an amps probe is also used, are as follows.

Starting test data

- Average cranking current
- Maximum cranking current
- Pre-set voltage
- Pre-set load voltage
- Average cranking voltage
- Minimum cranking voltage.

Battery test data

- Diagnosis
- Actual CCA
- Percentage capacity

- Open circuit voltage
- Impedance (often described as internal resistance).

Alternator test data

- Diagnosis
- Failure mode
- Charging at idle
- Charging volts under load
- Average current at idle
- Peak current
- Peak to peak ripple at idle
- Peak to peak ripple under load.

81. **Worksheet** Checking voltage supplies.

The testing routine described here is generic; refer to manufacturers' procedures and circuits for specific details.

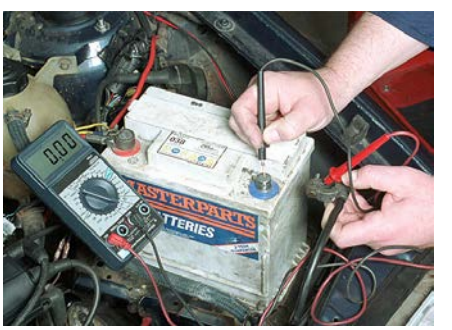

Testing the circuit

Hand and Eye Checks First, carry out 'hand and eye checks'. This means looking for loose wires, loose switches and other obvious faults. All connections must be clean and tight. Check that the battery is at least 70% charged. Visually check components for security and general condition. For fuse continuity, do not trust your eyes. Check for voltage at both sides with a meter or a test lamp.

Checking a fuse

Switches and Relays If fitted, check that the relay clicks. However, if it does, it only means that the relay has operated and is not necessarily making contact. The supply to and from the switch should be battery volts. If there is no supply out from the switch when it is operated, then the switch is faulty. The supply to and from the relay (if fitted) should be battery volts. If there is no supply out from the relay, but it clicks when the switch is operated, the relay is faulty.

Voltage Supply The voltage supply to the light should be within 0.5V of the battery. The ground circuit continuity should be 0 ohms or give a reading of 0V. Finally, after any work such as this, check the operation of all lights.

Voltage reading being taken

82. **Worksheet** Check operation of gauges and warning lights.

Most gauges and warning lights can be checked as the vehicle is run normally. However, some require a more detailed examination. Specific tests are explained over the next few screens.

Checking operation of the gauges

Gauges To test the fuel gauge, simply compare the reading with how much is in the tank! However, make sure you wait for the gauge to settle after the ignition is switched on. The temperature gauge is checked by starting the engine from cold and noting the gauge movement. Note that the gauge reading may appear wrong but it is, in fact, accurately showing a cooling system fault. The speedometer, including the odometer (mileage counter), can be checked on a road test or by supporting the vehicle so that the driven wheels can be run freely in the workshop. A rev-counter can be checked against a test meter reading.

Temperature gauge

Charging and Oil Warning Lights There are numerous warning lights on modern vehicles. Some of the main ones are covered here. The oil pressure warning light should come on with ignition and go out as soon as the engine starts. It should remain out at idle speed. The charge warning light is to indicate that the alternator is operating correctly. The light should come on with ignition and go out as the engine is started. On some older vehicles, it may just flicker at idle speed, but must remain out at all other engine speeds.

Charge and oil light

Other Warning Lights Many cars have a 'check engine' warning light. This is activated if the system detects any faults that affect the engine management. If this light activates, the fuel and ignition systems should be checked. Cars fitted with ABS have a warning light to indicate that the system is functioning correctly. This light should come on with ignition and go out after a self-test has been completed. Other warning lights include the indicators and the main beam warning lights. These are simple to test!

'Check engine' warning light

83. **Worksheet** Check electric window operation and reset position memory.

Window control pack showing safety switch

Check operation. (Note that this is a generic procedure; refer to specific information at all times). Ensure that the battery is charged and then switch on the ignition. Operate each window from the driver's switch pack. Check, in each case, for one-touch operation as well as limited movement. Operate each window from the appropriate passenger's switch. Move the driver's safety switch to the 'isolate rear' position and then check that the rear windows are locked.

Bounce Back Check the manual to determine whether a bounce-back or back-off feature is included. Check this by putting a magazine or some similar item in position so that the window will bounce back when hits the item**.**

Global Closing If a 'global closing' feature is included check the operation by opening one or more windows and then locking the car with the remote key. Some vehicles require the key button to be held for a few seconds to make this feature operate. Switch off the ignition.

Position Memory Reset Note: This is a generic procedure for anti- trap systems only; check specific manufacturer's data. Carry the following procedure out on each window in turn. Press the switch to close the window, hold it until the window is fully closed and then for an additional second. Release the button and then press it to the close position again for a second, three more times. Open the window fully, press the close switch once and check operation. The window should close fully in automatic mode. Repeat the previous procedure if it does not. Note that the anti-trap function is disabled until the position memory has been reset.

Operating the switch

84. **Worksheet** Check central door-locking and alarm operation.

Note that, as usual, different systems operate in different ways, so check specific data as necessary. Close all of the doors and operate the central locking from the driver's door lock using the key manually. All doors and the tailgate should lock. If a double locking system is fitted, turning the key again double locks all openings.

Central Locking Check manually that all doors and openings have locked. Repeat the above procedure using the remote key if available. Repeat again from the passenger's door lock.

Alarm Operation Open one of the windows and then fully lock the car. Reach inside the car. If a movement sensor is incorporated, the alarm will sound! If not, then reach in and open the door from the inside. The alarm should now sound! Press the remote or use the key in the driver's door to reset. Finally, close all windows and lock the car.

85. **Worksheet** Checking voltage supplies.

Testing the circuit

The testing routine described here is generic; refer to manufacturers' procedures and circuits for specific details.

Hand and Eye Checks First, carry out 'hand and eye checks'. This means looking for loose wires, loose switches and other obvious faults. All connections must be clean and tight. Check that the battery is at least 70% charged. Visually check the bulbs, or even better, test them with an ohmmeter. For fuse continuity, do not trust your eyes. Check for voltage at both sides with a meter or a test lamp.

Removing a rear light bulb for testing

Switches and Relays If fitted, check that the relay clicks. However, if it does, it only means that the relay has operated, and it is not necessarily making contact. The supply to and from the switch should be battery volts. If there is no supply out from the switch when it is operated, then the switch is faulty. The supply to and from the relay (if fitted) should be battery volts. If there is no supply out from the relay, but it clicks when the switch is operated, the relay is faulty.

This type of relay is very common

Voltage Supply The voltage supply to the light should be within 0.5V of the battery. The ground circuit continuity should be 0 ohms or give a reading of 0V. Finally, after any work such as this, check the operation of the lights.

86. **Worksheet** Check fuse and bulb condition. Replace as required.

Checking fuses and bulbs is a simple task but there are a number of points where extra care must be taken. There are two key points to remember:

Only replace fuses or bulbs with the recommended type and rating.

Do not touch the surface of quartz halogen bulbs.

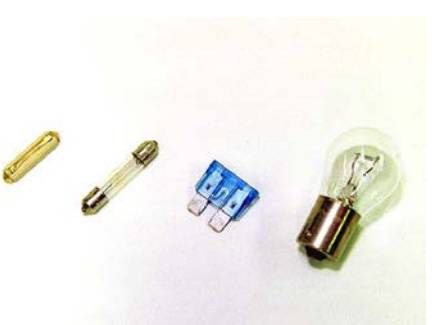
Fuses and bulbs

Fuses Check fuse and bulb condition. Replace as required.

Checking fuses and bulbs is a simple task but there are a number of points where extra care must be taken. There are two key points to remember:

Only replace fuses or bulbs with the recommended type and rating.

Do not touch the surface of quartz halogen bulbs.

Fuses in the fuse box

Bulb Holders Check the vehicle handbook or workshop manual for bulb replacement methods. Most rear lights are accessible from behind the light cluster inside the vehicle. Headlight bulbs usually have a small cover that can be removed. Side and turn signal light units are sometimes removed as a unit after a spring clip is released.

Rear light holder

Bulbs Checking the continuity of the bulb filament by eye is acceptable. However, it is safer to use an ohmmeter if in doubt. A reading of a few ohms will indicate that the bulb is in good working order. Do not touch the glass of halogen headlight bulbs. This can create a localized hot spot due to grease contamination. This may cause the bulb to blow because the glass can crack. Clean the bulb carefully if touched accidentally. Replace a faulty bulb with one of the correct rating, voltage and wattage, as well as the correct fitting. In some cases, bulbs are colored. Check all lights for correct operation when work is complete.

Halogen bulb

Summary System performance checks are often quite simple. However, they are important. Cars are used at high speed and sudden breakdowns can be dangerous. The systems should therefore function correctly at all times.

Read the previous section again and note down some key bullet points here:

-
-
-
-
-

Inspect and Measure Components

Introduction The main inspections and measurements carried out on the system are included in this section. Inspections should take place at scheduled service intervals and if problems have been reported.

Inspections and measurements are important[2]

Workshop Tasks A worksheet for inspections and measurement of the electrical components is included in this section. Refer to the safety precautions in the Health and Safety sections before carrying out any practical work on vehicles. The worksheet can be printed and used as part of a practical training program. It gives general instructions only, and should therefore be used together with a manufacturer's workshop manual, or other good source of information.

87. Worksheet Inspect and measure electrical/electronic circuits and components.

Many of the measurements noted here have been covered in a previous section. However, they are worth repeating because learning these test methods is very important. Just a few examples are given. More are included on the worksheet. Refer to modules three and four, if necessary, for more details.

Component under test

General Test Procedures Resistors (e.g. plug leads) can be measured using an ohmmeter. Make sure it is on the correct range. To check a switch (e.g. ignition switch); measure the voltages at the input supply and at the output. The readings should be the same. To check a bulb (e.g. twin filament headlight type), simply connect it to a battery or measure the resistance of each filament. You should get a reading of almost zero ohms in each case. The best way to test a relay (e.g. for fog or driving lights) is to energize the coil with 12V (pins 85 and 86) and measure the resistance between the contact terminals (30 and 87). Most general circuit connections (e.g. wiring harness plugs) can be tested by measuring the voltage while wiggling!

Testing a distributor sensor

Scope Tests When you look at a waveform on a screen, you must remember that the height of the scale represents voltage and the width represents time. Both of these axes can have their scales changed. They are called axes because the 'scope' is drawing a graph of the voltage at the test points against time. The time scale can vary from a few µs (microseconds) to several seconds. The voltage scale can vary from a few mV to several kV.

Typical Waveforms For each of the following items, a typical waveform is shown:

1. Inductive pulse generator output
2. Hall effect pulse generator output
3. Primary circuit pattern
4. Secondary circuit pattern
5. Alternator ripple voltage
6. Injector waveform
7. Lambda sensor voltage
8. ABS wheel speed sensor output

88. **Worksheet** Check charge circuit operation

Alternator and drive belt

Crankshaft pulley

The most common cause of undercharging is a defective drive belt. Look at the belt very carefully and replace it if there is any doubt about serviceability. The belt is made from a rubber compound reinforced with a fabric webbing. It is possible for the webbing to weaken and the belt to look fine when cold but to slip when warm because the rubber becomes pliable.

Belt Tension A vee belt grips the sides of the pulleys and any slippage will polish the belt and pulleys. If this is found, replace the drive belt. The pulleys may also need replacing if excessively worn. The belt tension is important and, as a rule, the free play on the long side of the belt should be about half an inch or 13mm. Multi-vee belt tension may be checked in a similar way. However, it is important to follow the vehicle manufacturer's instructions for this adjustment.

Vee belt and pulley

Alternator Output The output from an alternator has two values – the regulated voltage and the current output. The voltage should always be the same, as this is controlled by the regulator at the rated voltage. Modern alternators are usually 14.2 (+/- 0.2) volts, but some older types are higher. Check the manufacturer's data for this value, and for the maximum current output.

Alternator output voltage

Voltage and Current Tests A basic method to carry out a quick check is to connect a digital voltmeter across the battery. A clamp-on ammeter should also be connected on the alternator output cable (not the starter motor feed).

Voltmeter connected to check alternator output

Ammeter connected to check alternator output

Running Tests Start the engine and take voltage and current readings at both idle speed and at about 3,000 rev/min. The voltage should be as specified in the manufacturer's data (14.2 volts). The current will vary according to the state of charge of the battery and the load being used by the vehicle electrical systems.

Alternator regulated voltage

Maximum Current Output Test Check that the alternator can supply all electrical systems at the same time and still charge the battery. Switch on the vehicle headlamps, fog lamps, heated rear window, air conditioning and any other systems. Check that the alternator output current is near its rated output. If necessary the output of the alternator can be made to increase nearer to its maximum. Discharge the battery by leaving lights on for a few minutes before starting the engine and begin the test.

Turn on vehicle…

Electrical systems…

To check alternator…

Current output

Regulator Bypass Test Some alternators can be tested by bypassing the regulator terminals so that the alternator provides the maximum output. Carefully follow the manufacturer's instructions. This test is not often necessary, so refer to manufacturer's recommendations.

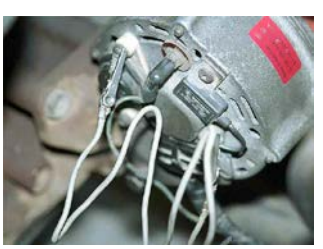
Regulator bypass test for alternator maximum output

Charge Warning Light Check that the charge warning light comes on before the engine is started. The final charging system check is to make sure that the warning light goes out when the engine speed is increased.

89. **Worksheet** Check starter operation.

Check battery before checking starter operation

The battery must be fully charged for correct starter motor operation. The main problems experienced with starter motor systems are poor cable connections and starter motor defects.

Visual Checks The basic starter system test procedure used to identify any faults should start with a visual inspection of the battery terminals and cables. Look closely for signs of corrosion and cable strands that may be broken close to the terminals. Check the terminals on the starter motor and solenoid for the main motor feed and for the control circuit.

Checking starter cables and terminals

Battery Voltage When Cranking Connect a digital voltmeter across the battery terminals and note the voltage. Follow the vehicle manufacturer's instructions for disabling the ignition circuit to prevent the engine from starting, and, if necessary, the injectors, so fuel does not enter the exhaust and catalytic converter. Crank the engine for about 10 seconds and note the voltage reading. The cranking voltage should not drop below 10 volts.

A digital voltmeter connected to show…

…Cranking volts

Starter Voltage When Cranking Connect a digital voltmeter between the main starter terminal and the starter body. Crank the engine and note the voltage. The reading should be no more that half a volt less than the reading taken at the battery.

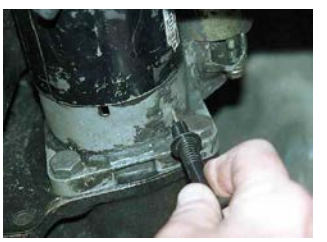
Voltmeter connected to starter earth…

…And starter supply

Earth Circuit Tests To check the ground, connect the probes to the motor body and battery ground terminal. A reading of 0.5 volts during cranking should not be exceeded.

Voltmeter connected to check earth circuit

Solenoid Feed To check the solenoid feed from the ignition/starter switch, connect the probe to the solenoid switch feed cable at the solenoid. Voltage readings with the terminal connected should be within 0.5 volts of the battery voltage.

Voltmeter connected to check solenoid supply

Main Contacts The solenoid main contacts can be checked by connecting the meter probes across the solenoid main terminals. The meter reading during cranking should not exceed 0.5 volts. However, a reading of 0 volts is normal.

Voltmeter connected to check solenoid contacts

Starter Faults If the battery, cables and connections are all in good shape but the motor is not operating correctly, it will need to be removed for further tests. The main components to look at are the brushes and internal windings. If the motor is failing to engage correctly, the drive pinion and starter ring gear on the engine should be inspected.

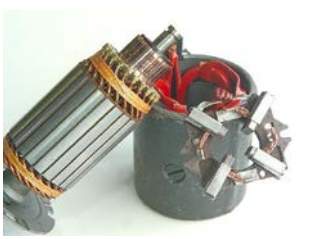
Starter motor components

90. **Worksheet** Workshop task: Inspect and measure electric window heaters.

Note: Most window heaters work on a timer relay. This prevents unnecessary load on the battery and charging system. Make sure the relay is switched on when testing the system. The procedure here can be applied to front or rear window heaters. Some systems require the engine to be running. Check manufacturers' data. Measure the battery voltage. It should be 12.6V or just slightly higher.

Screen heater elements

Electric Window Heater Switch on the ignition and the front/rear window heater switch. Check that the warning light has illuminated. Where connections can be accessed, connect a voltmeter across the supply terminals. It should read within about 0.5V of the battery voltage. Switch off the system and connect an ammeter in series with the heater. This can be done by connecting in place of the fuse using suitable adapters.

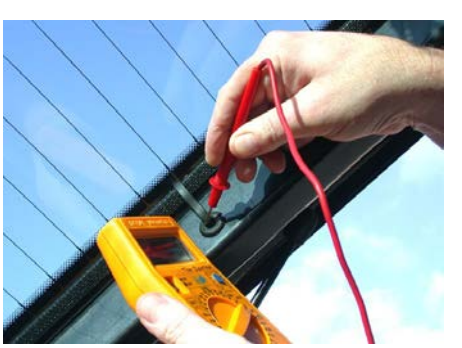
Voltage test

Current Draw Measure the current draw. Readings will vary, but figures in the region of 20A or more are to be expected. A low reading would indicate a high resistance in the circuit. Some cars with hatchbacks have contacts that meet when the hatch closes. Double-check these for operation and cleanliness. As a final, simple test, switch on the heater and breathe heavily on the window! The condensation should disappear quickly.

Screen heater current draw

91. **Worksheet** Inspect and measure wiper motor operation.

Note: Wipers should not be operated for long periods on a dry window. Take extra care when operating wipers with the linkage exposed, as it is easy to catch your hands and cause injury. Run through the washer and wiper operations to check for correct operation. Most wipers have a slow, fast, intermittent and wash/wipe function. Check that the blades park when the switch is turned off. Switch off the ignition.

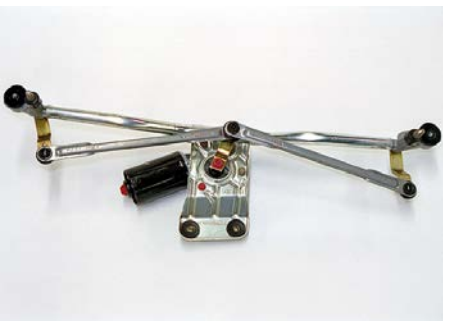
Wiper motor and linkage

Wiper Operation Connect an ammeter in series with the motor supply. This can be in place of the fuse, if necessary, by using suitable adapters. Run the wipers at each speed after wetting the window (using the washers is probably easiest). Measure the current draw.

Current draw

Current Testing Readings will vary, but figures in the region of 12A or more are to be expected. A low reading would indicate a high resistance in the circuit. Inspect the circuit and make sure connections are clean. Connecting a voltmeter across a connection is a good way of testing it.

Reading the current draw

Volt Drop Testing A reading of almost zero volts is to be expected when the motor is operating. A high reading would indicate a motor fault or a partially seized linkage. Check the linkage and lubricate/renew as required. Refit any covers removed and make sure all fuses are refitted.

Circuit volt drop test

Airbag System – Special Procedures NOTE: Careless or incorrect diagnostic work could deploy the air bags, causing serious injury. Leave well alone if in any doubt. The only reported fault for air bags should be that the warning light is staying on! If an air bag has been deployed then all the major components should be replaced. Some basic tests that can be carried out are described on the following screen.

Supplementary Restraint Do NOT carry out any electrical tests on the airbag circuit. Ideally, access fault codes with an appropriate scanner. It is extremely dangerous to set off an air bag. Refer to manufacturers' special instructions at all times. However, it is acceptable to look for basic problems or faults.

Air bag position

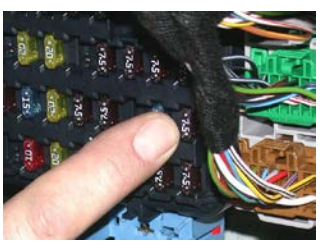
SRS fuse

System Tests Disconnect the supplementary restraint system (SRS) fuse or the battery ground cable. This is to prevent the risk of accidental deployment of air bags or belt tensioners. Wait for at least ten minutes to allow the igniter capacitors to discharge. Carry out hand and eye checks. This means looking for loose components and general security of connections. Pay particular attention to the slip-ring connections on the steering wheel. Refit the fuse, or reconnect the battery, switch the ignition on and note the SRS warning light operation.

SRS operation scenario…[2]

Air bag Operating The activation of an air bag during a crash test is shown here. It saves lives in these cases but can also be very dangerous when worked on. Be careful.

92. **Worksheet** Check temperature and fuel sender resistances.

Remember to disconnect the wires before testing resistance. This will ensure an accurate reading.

Fuel sender

Temperature sender

Temperature and Fuel Sender Resistances Remove the wire or wires from the temperature sender. Note that if two wires are used, these are the connection points. If one wire is used, the circuit is from there to the body of the unit. Connect the ohmmeter and measure the resistance. Set the range on the ohmmeter to suit. Compare with specifications and replace if required. Many types read about 1800 ohms at room temperature, but this varies, so check data.

Checking temperature sender resistance

Manufacturers Specifications Remove the wire or wires from the fuel tank sender. Note that if two wires are used, one is usually for a low fuel switch. Connect the ohmmeter and measure the resistance. Set the range on the ohmmeter to suit. Compare with specifications and replace if required. Many types read about 20 ohms full and 200 ohms empty, but this varies, so check data.

Checking fuel sender resistance

Check Operation of Instruments Reconnect all wires and check the operation of all instruments. This is an important step because it is easy to knock another wire loose while carrying out these tests. Make sure the readings are related to the vehicle condition.

Instrument panel

93. **Worksheet** Inspect and measure output from road speed sensor.

There are many types of road speed sensor. Most are described as inductive, Hall effect, dc or quenched oscillator types.

Taking a voltage measurement

Inductive Sensors Disconnect the wires from the sensor. There are usually two, but if a third is used it will be a screen connection to prevent interference entering. Measure the resistance and compare the reading against specifications. This may be about 800 ohms, but double check. Next, support the vehicle wheels off the ground and run the car in gear. Measure the ac voltage output and compare against specifications. This is often about 5 volts ac, but it will vary with speed. Finally, check the output signal on a scope. An ac waveform showing a frequency that varies with speed should be observed.

Other Types Requiring a Power Supply Hall effect and other types require a power supply. Do NOT use an ohmmeter as this can damage some sensors. Checking the output signal on a scope is the best testing method. A waveform with a frequency that varies with speed should be observed. This may be a sine wave or a square wave. The dc types produce a voltage that rises with speed. This can be measured on a multimeter. When tests are complete, remember to reconnect all components.

94. **Worksheet** Check and adjust headlight alignment (beam setting).

To set the headlights of a car using a beam setter, follow the procedure outlined over the next screens. Always follow manufacturers' instructions where available. If any form of automatic adjuster is fitted, make sure it is moved to the setting position.

Beam setter

Headlight Beam Setting Park the car on level ground and place the beam setter in front of each light in turn. The setter should be positioned exactly in line, and square to the front of the car. The car should not be loaded, except for the driver. Bounce the suspension to ensure it is level.

Beam setter correctly positioned

Alignment Set the controls on the beam setter to the required value. This is usually 1 to 1.2% dip for asymmetric lights. With the lights set on low beam, adjust the cut-off line to the horizontal mark by turning the adjusters. The break-off point should be adjusted to the center line of the headlight.

Asymmetric dipped beam pattern

Headlight Adjusters Two screws are usually used for making the adjustments. One for vertical movement and one for horizontal movement. On older vehicles, these adjusters are easy to break if they are damaged from corrosion. Warn customers about this before you start work so they will understand why new parts may have to be fitted.

Adjustment is made here on this vehicle

95. **Worksheet** Check stoplight operation and adjust switch position.

Some early brake light switches worked on brake fluid pressure, but now most are operated by the pedal movement. The switch is usually located above the pedal.

Checking Stoplights Remove the two wires from the brake light switch and bridge them together with a fused jumper wire. The ignition may need to be switched on, but the brake lights should light. If not, trace the circuit for a break starting with the fuse. If the lights work when the switch is bridged, the switch needs replacing or adjusting.

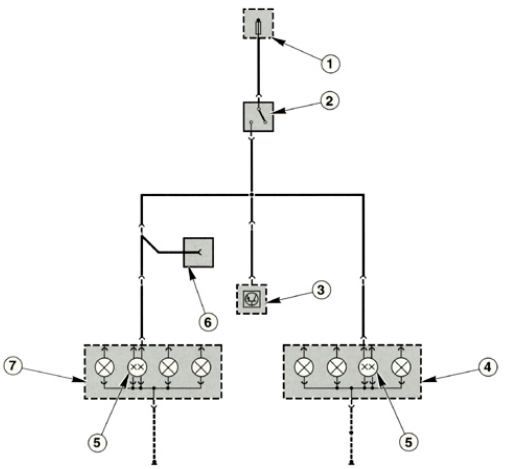

Stoplight circuit[1]

Stoplight Switch Most switches are positioned above the brake pedal and have a screwed body with adjusting nuts. These switches make contact as the plunger springs out. Adjust the switch position so that the lug on the brake pedal allows the plunger to move as soon as the pedal is pushed down.

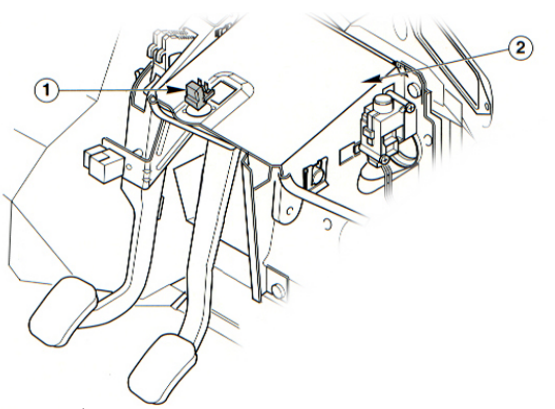

Switch in position[1]

Correct Adjustment Check that the switch operation is not too sensitive, such that the lights flash on due to vibration for example. Secure all wires and adjusting nuts. Always check operation again when work has been completed. On some vehicles, the brake light switch provides a signal to the ABS. Therefore, correct adjustment is very important.

Pedal box

Summary Some repairs can involve significant work. However, do not make any compromises. Keep your customers, and yourself, happy and safe.

Read the previous section again and note down some key bullet points here:

-
-
-
-
-

Faultfinding and Inspections

Introduction The secret with finding faults is to have a good knowledge of the system and to work in a logical way. Use manufacturers' data and recommended procedures. This section includes specific faultfinding procedures. Tests for electronic components, sensors and actuators are stated. However, you should always refer to the manufacturer's recommendations.

Check data before starting work

Symptoms and Faults Remember that a symptom is the observed result of a fault. The next few screens each state a common symptom and possible faults. It is important to note that faults in one system can produce symptoms that may appear to be caused by another.

Electronic Component Testing Individual electronic components can be tested in a number of ways, but a digital multimeter is normally the favorite option. The following screens suggest some methods of testing electronic components when **removed** from the circuit. Some sensors must be connected to the circuit in order to produce an output. However, if measuring resistance, the item must always be **disconnected**.

Electronic components

Resistors Measure the resistance value with an ohmmeter and compare this to the value written or color-coded on the component.

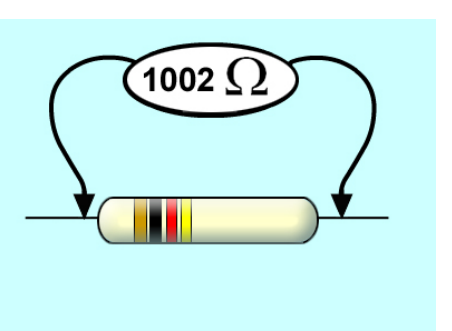

Testing a resistor

Capacitors 💻 A capacitor can be difficult to test without specialist equipment. However, you can try this: Charge the capacitor up to 12V and connect it to a digital voltmeter. As most digital meters have an internal resistance of about 10 M ohms, calculate the expected discharge time (*T = 5CR*) and see if the device complies! A capacitor from a contact breaker ignition system should take about five seconds to discharge in this way.

Diodes and LEDs Many multimeters have a diode test function. If so, the device should read open circuit in one direction, and about 0.4 to 0.6V in the other direction. This is its switch on voltage. If no meter is available with this function then wire the diode to a battery via a small bulb. It should light with the diode one way and not the other. Most LED's can be tested by connecting them to a 1.5V battery. Note the polarity though; the longest leg or the flat side of the case is negative.

The rectifier must be removed for testing

Transistors (Bipolar) Some multimeters have transistor-testing connections, but if not available, the transistor can be connected into a simple circuit and voltage tests carried out. Voltage tests on a transistor that show about 0.7V between its base and emitter usually indicate correct operation. It is fair to point out that without specific data it is difficult for the non-specialist to test unfamiliar circuit boards. However, it is always worth checking for obvious breaks and dry joints.

Transistor test socket on a multimeter

Digital Components 💻 A logic probe can be used. This is a device with a very high internal resistance, so it does not affect the circuit under test. Two different colored lights are used; one glows for a 'logic 1' and the other for 'logic 0'. Specific data is required in most cases, but basic tests can be carried out.

Testing Sensors Testing sensors to diagnose faults is usually a matter of measuring their output signal. In some cases, the sensor will generate an output (an inductive sensor for example). In other cases, it will be necessary to supply the correct voltage to the device to make it work (Hall sensor for example). In this case, it is normal to check that the vehicle circuit is supplying the voltage before proceeding to test the sensor.

Sensor under test

Inductive (Reluctance) Sensor A simple resistance test is good. Values vary from about 800 to 1200 ohms. The 'sine wave' output can be viewed on a 'scope' or measured with an AC voltmeter.

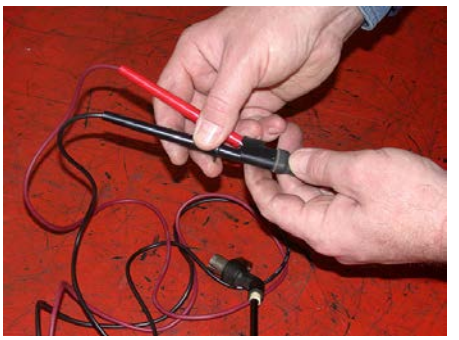

Testing a wheel speed sensor

Hall Effect Sensor The square wave output can be seen on a scope or the voltage output measured with a DC voltmeter. This varies between 0 to 8v for a Hall sensor, used in a distributor, as the Hall chip is magnetized or not.

Check the output from a Hall sensor with a voltmeter or scope

Thermistor Most thermistors have a negative temperature coefficient (NTC). This means the resistance falls as the temperature rises. A resistance check with an ohmmeter should give readings broadly as follows:

0 ^{0}C = 4500 ohms

20 ^{0}C = 1200 ohms

100 ^{0}C = 200 ohms.

(Figures vary so remember to check manufacturers' specs.)

Checking thermistor resistance

Flap Air Flow Sensor The main part of this sensor is a variable resistor. If the supply is left connected then check the output on a DC voltmeter. The voltage should change **smoothly** from about 0V to the supply voltage (often 5V).

Flap type sensor

Hot Wire Air Flow Sensor This sensor includes some electronic circuits to condition the signal from the hot wire. The normal supply is either 5 or 12V. The output should change between about 0 and 5V as the air flow changes.

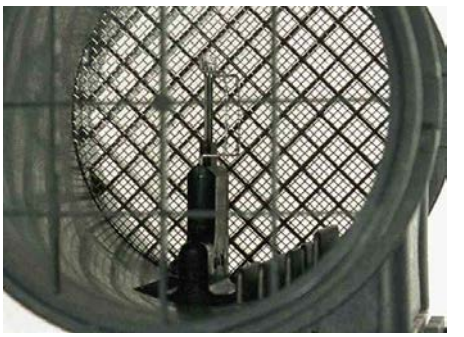
Hot wire sensor

Throttle Potentiometer This sensor is a variable resistor. If the supply is left connected then check the output on a DC voltmeter. The voltage should change **smoothly** from about 0 to the supply voltage (often 5V). If no supply is connected, then check the resistance, again it should change smoothly.

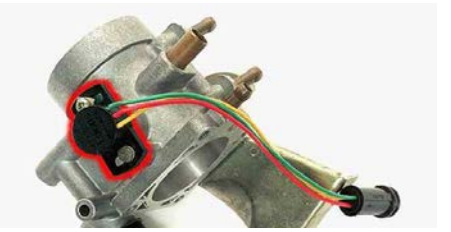
Check the 'throttle pot' with a voltmeter

Oxygen (Lambda) Sensor The lambda sensor produces its own voltage, a bit like a battery. This can be measured with the sensor connected to the system. The voltage output should vary smoothly between 0.2 and 0.8V as the mixture is controlled by the ECU.

Lambda sensor in position

Pressure Sensor The normal supply to the externally mounted manifold absolute pressure (MAP) sensor is 5V. The output should change between about 0 and 5V as the manifold pressure changes. As a rough guide 2.5V at idle speed. Use a vacuum/pressure gauge and pump to make the readings change.

Pressure sensor test

Testing Actuators Testing actuators is simple as many are operated by windings. The resistance can be measured with an ohmmeter. Injectors, for example, often have a resistance of about 16 ohms. A good tip is that where an actuator has more than one winding (stepper motor for example), the resistance of each should be about the same. Even if the expected value is not known, it is likely that if the windings all read the same, then the device is in order. With some actuators, it is possible to power them up from the vehicle battery. A fuel injector should click, for example, and a rotary air bypass device should rotate about half a turn. Be careful with this method, as some actuators could be damaged. If in doubt – seek advice!

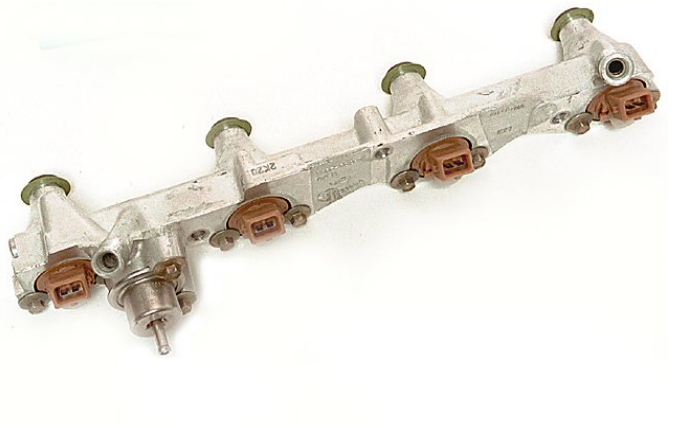

Test fuel injector resistance

Tools and Equipment The tools and equipment required for the inspection of the battery and charging and starting components are meters or dedicated test equipment. There are testing devices manufactured specifically to test the battery or the starting system or charging system. Some manufacturers make a test kit to cover all of these areas. Specialized electrical component repair workshops will have an alternator test bed that incorporates meters and a motor to run the alternator.

Multimeter

Ammeter

Alternator test bed

Armature growler

96. **Worksheet** Carry out starter motor and circuit tests.

The tests shown here are all carried out with a voltmeter. Making connections to disconnected feed terminals will show the full voltage if a live feed exists. Do not short or touch to the ground live feeds to check for a live supply. This practice on modern vehicles can damage electronic components.

Voltmeter checking live feed to a solenoid terminal

Voltage Drop Tests The connection of the voltmeter to terminals (while they are still connected) will indicate a voltage drop in the circuit. There usually will be some voltage drop, and maximum values are specified in manufacturer's data. These should be used to compare results of tests.

Meter connected to solenoid terminal

Starter Circuit Tests The basic tests for a motor that is not operating (and methods for finding the defect) are shown on these circuit diagrams. Some nominal values that would indicate a satisfactory condition are also given.

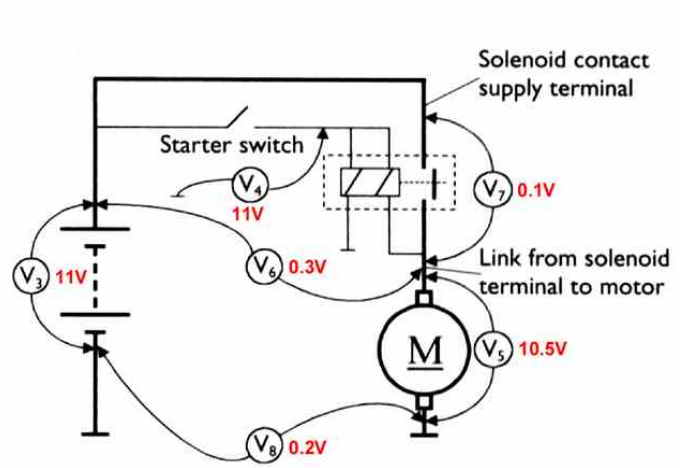

Starter circuit showing good voltmeter readings

Solenoid Testing If the solenoid is not operating, remove the motor and then the solenoid. Check that the plunger is free to move and carry out a resistance test to check continuity of the windings.

Solenoid removed from pre-engaged motor

Motor Examination If the motor is found to be defective, it should be removed, stripped and the brushes and commutator checked.

Brushes and commutator

Pinion Assembly If the pinion gear engagement is not operating, check the lever attachment and the pinion drive through the one-way clutch. The lever should have sufficient throw to bring the gear into mesh with the starter ring gear on the flywheel or torque converter drive plate. The one-way clutch should drive in a forward direction and the free wheel in the opposite direction.

Solenoid and lever assembly

Checking the Bushes Check the bushes and bearings for wear by offering up the spindle. Gauge the wear by the amount of free play found. Free play should be minimal. If it is possible to tilt the spindle, the play is excessive. The wear is usually in the bearing, but also check the condition of the shaft bearing faces.

97. **Worksheet** Carry out alternator and circuit tests for correct charge rates.

Alternator

These tests can be carried out with dedicated test equipment or with a voltmeter and an ammeter. An alternator should produce a steady voltage at a specified engine speed. Refer to the manufacturer's instructions for specific data.

Voltage Readings The voltage reading shown here would indicate that the alternator is working satisfactorily.

Engine stationary…

…Engine running

Fuel AND Temperature Gauges Read Incorrectly Possible causes of this symptom are:

Voltage stabilizer working at incorrect level or open circuit
Tank sender AND temperature sensor faulty at the same time (this is possible but unlikely)

Loose or broken wiring, connections or fuse.

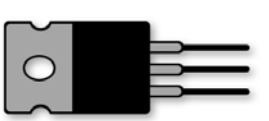
Voltage stabilizer

One Gauge Reads Maximum or Minimum Possible causes of this symptom are:

Short or open circuit sensors
Short or open circuit wiring

Gauge unit fault.

Fuel and temperature gauge assembly

No Reading from One Gauge Possible causes of this symptom are:

Loose or broken wiring, connections or fuse
Sender units (sensors) open or short circuit

Gauge unit fault.

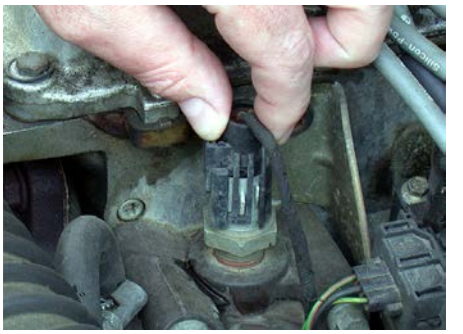
Loose connection to temperature sender

Systematic Testing Working through a logical and planned systematic procedure for testing a system is the only reliable way to diagnose a problem. Use these six stages of faultfinding as a guide.

Verify the fault

Collect further information

Evaluate the evidence

Carry out further tests in a logical sequence

Correct the problem

Check all systems.

Faultfinding Procedure As an example of how these stages are applied, assume the reported symptom is that the fuel gauge is not working. Carrying out the procedures, outlined over the next five screens, would be a recommended method.

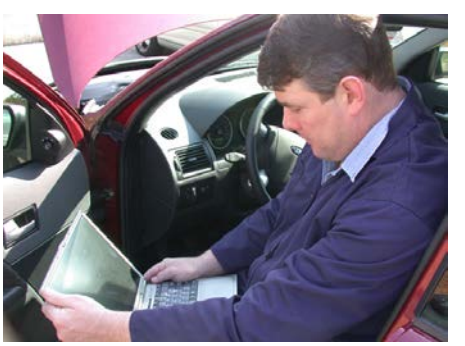
Check the latest data

Verify the Fault This stage is quite simple; switch on the ignition and see if the gauge moves! The reason that it is important to verify the fault is that sometimes customers do not describe the symptoms correctly. This is not meant to be critical. It is quite understandable that they may not have the necessary technical knowledge. In addition, you may note that the gauge does move, but not to the correct position.

Fuel and temperature gauges

Collect Further Information Once the fault has been verified, you should collect further information. This may mean getting manufacturer's data, but in this case, it may also mean testing other gauges on the vehicle and talking to the customer. For example, the customer may say that it does work sometimes, and you may further note that the temperature gauge works correctly.

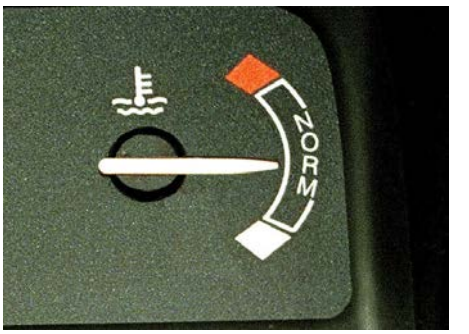

Temperature gauge

Evaluate the Evidence Evaluate the evidence means stop and think. Consider at this stage what you know – NOT what you don't know! The small amount of evidence we have at this stage can tell us a lot. Because the temperature gauge is working, the fault must be after the voltage stabilizer. Moreover, as it still works sometimes, it is likely to be a loose connection, or a worn tank sender unit. Nothing is certain, but the chances are good!

Stop and think!

Carry Out Further Tests The task now is to check the circuit associated with the gauge and sender unit. The fault is probably the sender unit, but at this stage, we can't be certain. Of course, it could be the gauge itself, so always keep an open mind. The normal test procedure is to short the sender unit lead to ground, but check the manufacturer's data first. As the lead to the tank unit is shorted to ground, the gauge should read full. When the lead is removed, the gauge should read empty. If it does, the sender unit is at fault and it should be replaced.

Testing at the tank unit

Correct the Problem When you carry out the repair, make sure it will be a permanent repair. Use new parts where necessary to ensure a good job is done. If a tank sender unit needs replacing, take care with the fuel in the tank. This should be removed with special equipment if necessary.

Draining the fuel tank

Check All Systems It is possible, when fixing one fault, to accidentally knock another terminal and cause a new problem. It is also possible that another fault exists, and it may appear to the customer that you have caused it! For both of these reasons, check that ALL systems work correctly when any repairs have been carried out.

Fuel and temperature gauges reading correctly

Radio Interference Faults that are possible causes of this symptom are:

Tracking HT components

Static build-up on isolated body panels

High-resistance or open-circuit antenna ground

Suppression device for open circuit.

Aerial earth or ground connection

Electric Windows Not Operating
Faults that are possible causes of this symptom, if ALL the windows were not operating:

Open circuit in electrical supply

Electrical fuse blown

Relay coil or contacts open circuit or high resistance.

Faults that are possible causes of this symptom, if ONE window is not operating:

Fuse blown

Control switch open circuit

Motor seized or open circuit

Back-off safety circuit signal incorrect.

Checking the fuse

Control switches

Cruise Control Will Not Set Faults that are possible causes of this symptom are:

Brake switch sticking on
Safety valve/circuit fault
Vacuum diaphragm holed
Actuating motor open circuit or seized
Steering wheel slip ring open circuit
Supply/ground/fuse open circuit.

Brake switch

SRS Warning Light Stays On Faults that are possible causes of this symptom are:

Wiring fault
Fuse blown or removed
ECU fault
Crash sensor fault
Igniter fault.

Do not work on air bag circuits unless fully trained.

Wipers Do Not Operate Faults that are possible causes of this symptom are:

Loose or broken wiring/connections/fuse

Corrosion in wiper connections

High-resistance contact on switch or wiring

Relay/timer not working

Motor brushes or slip-ring connections worn

Limit switch contacts open circuit or high resistance

Blades and/or arm spring in poor condition.

Wiper switch

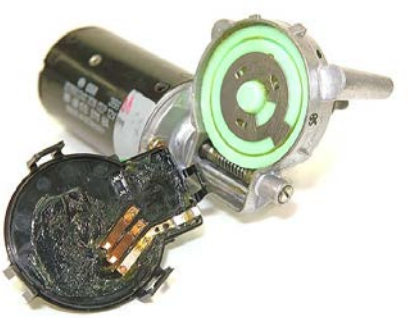
Wiper motor

Systematic Testing Working through a logical and systematic procedure for testing a system is the only reliable way to diagnose a problem. Use these six stages of faultfinding as a guide.

Testing a Circuit The procedure outlined on the next screen is very generic but with a little adaptation can be applied to any electrical system. Refer to manufacturer's recommendations if in any doubt. The process of checking any system circuit must follow a logical procedure. After each step, the expected result of the test is stated.

Checking data

Generic Test Procedure

Hand and eye checks (loose wires, loose switches and other obvious faults) - all connections clean and tight

Check the battery - must be 70 percent charged

Check motor/solenoid/linkage/bulbs/unit - visual check for security, etc.

Fuse continuity - (don't trust your eyes) check both sides with a meter or test lamp

If used does the relay click - the relay has operated it may not be making contact

Supply to switch - battery volts

Supply from the switch - battery volts

Supplies to relay - battery volts

Feed-out of the relay - battery volts

Voltage supply to the 'component' - within 0.5V of the battery

Ground circuit voltage - 0V.

Battery test

Fuse test

Supply test

Earth test

Faultfinding Procedure As an example of how the stages are applied, assume the reported symptom is that the wipers do not work on fast speed. The recommended method would be to carrying out the procedures outlined over the next five screens.

Verify the Fault Carry out a full test of the wipers to confirm the symptoms. Run through all of the functions. In particular, remember to check the wash/wipe operation and the intermittent wipe operation.

Collect Further Information If possible, speak to the customer. Ask if the problem developed suddenly or over a period. Run through a check of other systems on the car such as the rear wipers, if fitted. Let's assume, for the purpose of this example, that the symptoms developed over time, but now fast speed does not operate at all. Also, assume that all other systems operate correctly.

Wiper switch check

Evaluate the Evidence It may sound strange, at this stage, but consider what you know about the system, not what you don't know! What this means is that working out what parts of the circuit or system are in good order gives us a starting point for other tests. At this stage, for example, we know that the electrical supplies to the motor and switch must be good, the intermittent relay is OK and that the linkage must be in working order. Consider what components or circuit are only associated with 'fast' speed. These are: the switch, the motor and just one wire that joins the two. Keep an open mind, but at this stage, you would be right to be suspicious of the motor, and in particular, the fast-speed brush. Check the circuit diagram, if available, for the 'fast speed' wire color.

Switch

Motor

Circuit

Fast speed 'third' brush

Carry out Further Tests The next tests may depend on how easy it is to access certain components. For example, if the multiplug on the motor is accessible, test for a supply when the switch is moved to the fast-speed position. If a supply were present (use a voltmeter or test lamp), it would indicate that the switch and wire were in good order. If a supply were not found, then it would be necessary to check the output from the switch. Assume that a good supply was found. The fault, therefore, must be the motor.

Check supply to motor

Fix the Problem Remove the motor for repair or replacement. It is likely that the fault could be repaired by replacing the fast-speed brush. However, it is fair to consider that if this brush has worn, then other components in the motor may also be coming to the end of their working lives! For this reason, many technicians will recommend that a new, or reconditioned, motor be installed.

New motor assembly[4]

Check All Systems 💻 Run through all of the wiper functions after the new motor has been fitted. It is also important to check other associated systems in case a connection, for example, had been disturbed during the replacement work. Get it right – the first time!

Lights Dim Possible causes of this symptom are:

High resistance in the circuit
Low alternator output

Discolored lenses or reflectors.

One dim headlight

Headlights Out Of Adjustment Possible causes of this symptom are:

Suspension fault
Loose fittings
Damage to body panels

Adjustment incorrect.

Incorrectly adjusted lights will dazzle other road users

Lights Do Not Work Possible causes of this symptom are:

Bulbs blown
Fuse blown
Loose or broken wiring/connections/fuse
Relay not working
Corrosion in light units

Switch not making contact.

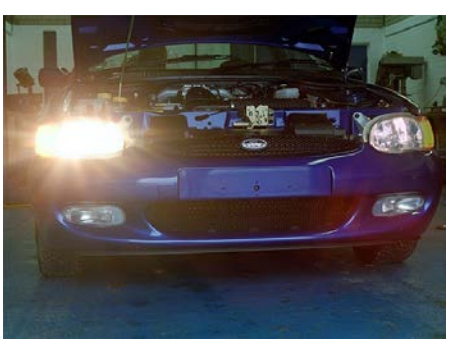
One light not working

Systematic Testing 💻 Working through a logical and planned systematic procedure for testing a system is the only reliable way to diagnose a problem. Use these six stages of faultfinding as a guide.

Verify the fault
Collect further information
Evaluate the evidence
Carry out further tests in a logical sequence
Correct the problem
Check all systems.

Faultfinding Procedure As an example of how these stages are applied, assume the reported symptom is that the headlight high beams are not working. Carrying out the procedures outlined over the next five screens would be recommended.

Check the latest data

Verify the Fault This stage is quite simple; switch on the lights and see if the high beam works! The reason why it is important to verify the fault is that sometimes customers do not describe the symptoms correctly. This is not meant to be critical; it is quite understandable that they may not have the necessary technical knowledge.

Headlights NOT on!

Collect Further Information Once the fault has been verified, you should collect further information. This may mean getting manufacturers' data, testing other lights on the vehicle, and talking to the customer. For example, the customer may say it just happened when the car hit a bump. Let's assume that she did, and all the other lights work on the vehicle, including the high beam warning light.

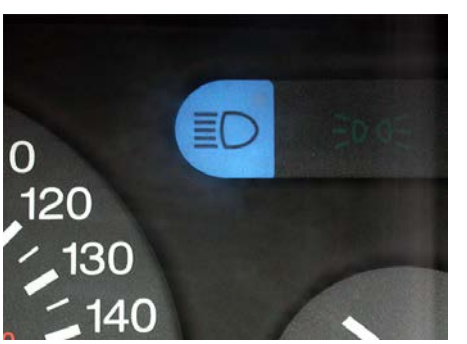

Main beam warning light

Evaluate the Evidence Evaluating the evidence means stop and think. Consider at this stage what you know – NOT what you don't know! The small amount of evidence we have at this stage can tell us a lot. Because the warning light is working, the fault must be after the low beam switch. Additionally, since it happened after a bump, it is likely to be a loose connection. Nothing is certain, but the chances are good!

Carry Out Further Tests The task now is to check voltages from the low beam switch to the lights as described previously. The fault is probably between the low beam switch and a point where there is a connection, which splits the two main beam lights. Of course, it could be two blown bulbs, so check the obvious first.

Taking a voltage reading

Correct the Problem When you carry out the repair, make sure it will be a permanent repair. If, as in this case, the fault was a loose terminal in a connector block, make sure the others are secure. Use new parts where necessary to ensure a good job is done. If a wire needs a new terminal, use quality parts and follow instructions for crimping or soldering the joint carefully.

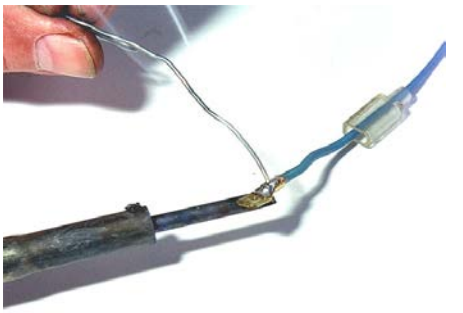

Securing an open circuit connection

Check All Systems It is possible, when fixing one fault, to accidentally knock another terminal and cause a new problem. It is also possible that another fault exists, and it may appear to the customer that you have caused it! For both of these reasons, check that ALL systems work correctly when any repairs have been carried out.

Check all the lights

Summary Faultfinding work is rewarding – when you find the fault! Remember to always work in a logical way. The stages of faultfinding can be applied to all systems on the vehicle, complex or simple.

98. **Additional Worksheet** Reported fault – discharged battery

Read the previous section again and note down some key bullet points here:

-
-
-
-
-

Engine Performance

Safety, tools & equipment and customer care

Health and Safety

We Have Ignition! Always follow all safety procedures and observe safety precautions when working on vehicles.

Some specific hazards associated with the ignition system follow.

High Voltages Ignition circuits use pulses of electrical energy in excess of 10,000 volts. These are created in the ignition coil and conducted through the coil and spark plug wires. Although shocks from ignition systems are rarely fatal, the reaction to the shock can cause serious injury. The reactions can cause involuntary movement of hands and arms or whole body movements into hazardous areas, such moving engine parts.

Shocking isn't it!

Running Engines Whenever carrying out tests on running engines, an awareness of rotating components must be maintained. This is particularly important when using a stroboscopic timing light because it can give the impression that the engine is stationary. Exhaust extraction equipment should always be used.

Cooling Fans Keep fingers away from electrically operated cooling fans because they are likely to start without warning during running engine tests.

Automatic Transmission For vehicles with automatic transmission, ensure that vehicle is in "Park" and is kept there during all engine running tests. As an added safety precaution, work to the side of the vehicle whenever possible.

Always select 'Park'

Short Circuits As with all electrical work, there is a risk from short circuits to ground, causing fires and very hot strands of wire. Follow standard procedures with the removal and reconnection of the battery ground cable whenever working on electrical components. This is advisable for all tasks except when the battery has to be connected for the work to be carried out. Note that it may be necessary to use a "keeper" to keep memory circuits alive if the battery is disconnected.

Battery connections

Short circuit

Overheated Coils Contact-breaker ignition coils can become very hot if the ignition is left on without the engine running. However, most electronic systems require the engine to be started to trigger the switching of the primary circuit. These systems will not overheat.

Conventional coil

DIS coil

Instruments Observe all standard procedures for the use of electrical instruments. Always observe the correct polarity, range selection, and connections for the instrument.

Multimeter

Engine analyzer

Range switch

Correct connections are very important

Arcing and Sparking! For all electronic ignition systems, avoid causing arcing when disconnecting terminals. This is achieved by disconnecting the battery ground cable or at least turning off the ignition. Do not allow high-voltage secondary circuit sparks of more than 5 to 6 mm during test procedures. This can cause damage to electronic components. If the vehicle is being arc welded, the recommendation is to remove the electronic modules.

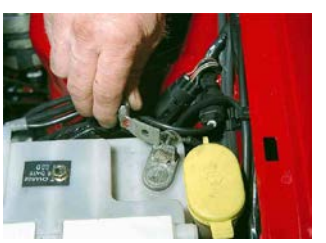
Disconnecting the battery

Disconnecting the electronic module

Replacement Components Always use replacement components that are specifically designed for the vehicle and match exactly the original equipment specifications. Ensure that all electrical connections are clean and tight.

Check for correct specifications

Caution Attention Achtung! All types of fuel – and particularly the vapors – are highly flammable. They can be ignited from a number of sources. Any open flame, a cigarette and, under the right conditions, even a hot object will start a fire.

Danger

Electrical Sparks The most common cause for starting fuel fires on vehicles in the repair shop is from electrical sparks. These can occur during the connection and removal of electrical terminals. Sparks also occur when the engine is cranked with the ignition on and the spark plugs removed. The plugs are removed to check cylinder compressions and for drying out flooded cylinders. Disconnect the coil or connect the HT cables directly to ground to prevent this.

Avoid Fires To avoid fires where fuel or vapor is likely to be around, the main safety precaution is to disconnect the vehicle battery whenever it is not required for the current task. Mark off the work area with warning signs cautioning about open flames. Obtain, and keep close by, a suitable fire extinguisher such as one containing CO_2. When checking cylinder compressions or any similar task, disable the ignition system.

Check which extinguishers are safe to use on fuel fires

Draining Fuel Never drain fuel into an open container such as a bowl, oil drain tray or cans where there is a risk of spillage from overfilling. Always use a pumped, sealed and grounded tank that is specially constructed for the job.

Fuel drainer

Skin Care All fuels and oils are harmful to skin and internal organs. The range of hazards is from drying out of the skin to dermatitis and cancers. Avoid prolonged or frequent contact with fuels and oils. Use a barrier cream or suitable gloves and wash after any skin contact as soon as reasonably possible. Replace skin oils with a lanolin cream. Never keep contaminated cloths in pockets.

Barrier cream and gloves

Pressurized Systems Many fuel systems are pressurized. The hazard from pressurized fuel occurs when the pressure is released. In the case of gasoline, the risk is from a spray when a pipe or hose is loosened or punctured. The gasoline spray could cause a fire if ignited and a personal injury if sprayed into the eyes. Involuntary movement into a rotating component is also possible. Always wear safety goggles when working with pressurized fuel lines.

Fuel is under pressure

Releasing Fuel Pressure Most gasoline fuel-injection systems have a method for releasing the fuel pressure. In some cases, a pressure release valve is fitted to the fuel rail. In others, it may be necessary to disable the fuel pump by removing a fuse or relay and running the engine until it stalls. Some systems may need a pipe union or joint to be gently eased to release the pressure. In all cases, follow the manufacturer's instructions.

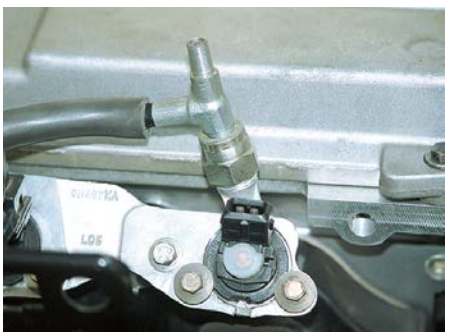

Fuel pressure valve

Compressed Air Sometimes an airline is required to clean components or fuel pipelines. Be careful when using compressed air. It must not be directed toward the skin. Always wear safety goggles when using an airline.

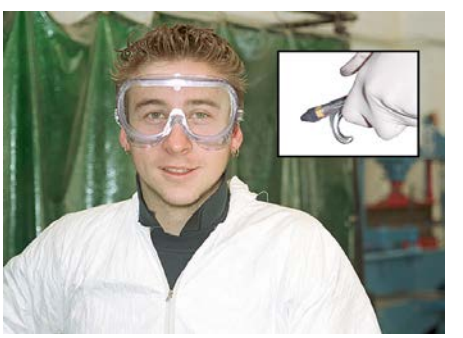

Take care with compressed air

Running Engines Many tests require that the engine runs. If so, remain aware of the risk from rotating components. Electrically driven cooling fans on the radiator can operate without warning, so keep fingers clear of these fans.

Electronic Systems Modern fuel systems use electronic control. Follow the manufacturer's procedures for all work. Do not disconnect or connect terminals when the ignition is turned on, the engine is running or if the electrical supply is live. There is a risk of damaging the electronic components.

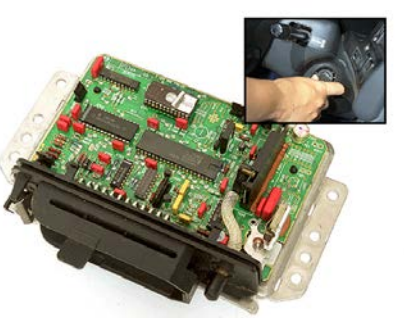

Electronic control unit (ECU)

Arc Welding Electronic modules should be removed from the vehicle whenever any electrical arc welding is being carried out on the vehicle.

Remove ECU before welding

Test Instruments Observe all standard procedures for the use of electrical instruments. Always observe the correct polarity, range, and connections.

Snap-on multimeter

Bosch MultiScope

Replacement Components Always use replacement components that are specifically designed for the vehicle. Components should match exactly the original equipment specifications. Ensure that all electrical connections are clean and tight.

Filter

Fuel pump

Safety First Before carrying out any service or repair work on the air supply, exhaust or emission control systems, refer to the general health and safety sections. Always follow all safety procedures and observe safety precautions when working on vehicles. Some of the specific hazards associated with the air supply, exhaust or emission control systems are listed in this section.

Exhaust system

Running Engines Running engines are sometimes needed for diagnostic and system checks. A running engine presents two hazards; the first is the risk from rotating components and the second from the accumulation of exhaust gas in the workshop. Remain aware of rotating parts such as the fan, belt and pulleys in the areas where you are likely to be working.

Electrically Driven Fans An electrically driven fan is switched on automatically, when the temperature of the coolant in the radiator rises above the switch operating temperature. This can occur even when the ignition is switched off. Always keep fingers out of the fan cowl and always remove the battery grounding lead when the engine does not need to be running for diagnostic tests.

Exhaust Emissions When carrying out exhaust emission measurements, it is important to prevent the build-up of exhaust gas in the workshop. Use extraction equipment that has special adapters for the gas probe or provide good ventilation.

Emissions check

Fuel Pipes The removal and replacement of air supply and exhaust emission components will often involve the removal of fuel pipes and hoses. Always disconnect the vehicle battery grounding lead and depressurize the fuel line before undoing or removing any fuel connection. When fuel is likely to drain from a pipe, either empty the system into a specially made retrieval tank or plug the pipe.

Fuel pipes

Working Below Vehicles There are two common hazards to avoid when working below vehicles, on or near the exhaust system. One is the very high temperature of exhaust manifolds, down pipes and catalytic converters, which can cause severe burns. The other risk is the possibility of getting rust and dirt particles in the eyes. Avoid these problems by keeping clear of hot surfaces and by wearing goggles whenever working below vehicles.

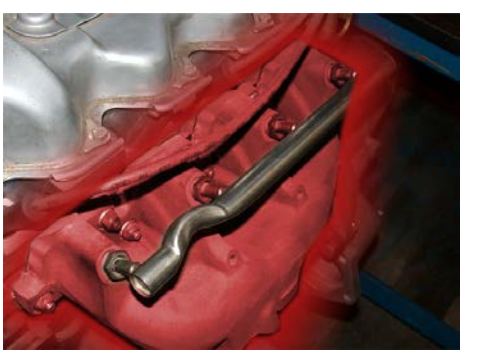

A very hot manifold!

Heavy Loads Another risk may be experienced if the task requires the lifting and moving of heavy loads, such as engines and sub-frames. Always tackle these tasks in an appropriate manner by using the recommended lifting equipment.

Engine crane[5]

Hoist[5]

Oxy-Acetylene When removing parts of the exhaust system, it may be necessary to use an oxy-acetylene flame to heat and separate pipes. Always follow standard safety precautions for use of the equipment. Be very careful that the flame is directed ONLY onto the exhaust pipe joint and always pointing away from fuel pipes and the vehicle floor. Use protective screens where flammable substances are in the area of the flame, or consider another method if the fire risk is high.

Take care with open flames

Original Equipment Be considerate and careful to use approved parts for all components that can affect exhaust emissions. Original equipment manufacturer's (OEM) parts may be required to meet the regulations.

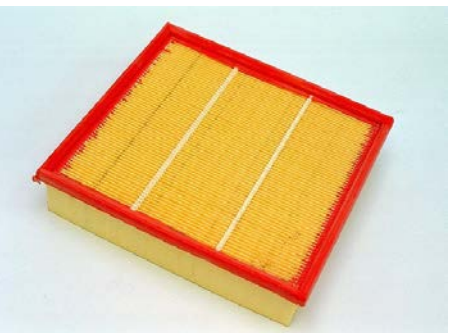

Use quality parts

Read the previous section again and note down some key bullet points here:

-
-
-
-

Tools and Equipment

Dedicated Test Equipment On early ignition systems, diagnostic tasks could be carried out with general workshop tools and equipment. New systems require specialized diagnostic and measuring equipment. Refer to manufacturer's workshop manuals and data books for precise instructions on the applications and uses of these special items.

Tools and Equipment The following screens include some of the tools and equipment that may be needed.

Feeler Gauges Standard feeler gauges are used for contact-breaker ignition service. Plastic or non-ferrous feeler gauges are used for checking the air gap on “limb”-type inductive-pulse generators.

Standard feeler gauges

Test Meters A standard range of analog or digital meters for volts, amps and ohms can be used, but vehicle technicians usually prefer a special meter, which includes dwell readings. A dwell meter is used to measure the ignition dwell angle or dwell period when the coil is switched on. This is a critical adjustment on early contact-breaker ignition systems. The dwell meter is connected to the primary circuit on the coil negative terminal and to the battery ground terminals. A wide fluctuation and oscillating reading would indicate wear in the distributor drive mechanism.

Standard electrical multimeter

Meter in use

Automotive multimeter

Scanner[5]

Stroboscopic Timing Lights Stroboscopic lights are triggered by the secondary circuit pulses to No. 1 cylinder spark plug and flash a strobe light onto the timing marks to show the position of the ignition spark. The stroboscopic light is used for dynamic ignition timing checks and adjustments.

Advance Tests For testing ignition advance mechanisms, a test light with a built-in meter is used. This has an adjusting knob that is twisted to position. The light flashes at a reference point such as tdc (top dead center) or the timing marks. Alteration from the actual secondary pulse to the repositioned flash is shown on the meter as degrees of advance or retard.

Instruments and Test Meters A tachometer is used to measure engine speed in revolutions per minute (rpm or rev/min). It is connected to the ignition primary circuit. Switches on the instrument select the number of cylinders and the type of engine. Some of these instruments have two scales, one for low engine speeds and the other for high engine speeds. Select the scale to suit the test or adjustment being carried out.

Analyzer screen

Reading being taken using an automotive meter

Test Programs 💻 A range of engine analyzers is available. All are capable of running electronic and electrical test programs. The use of any individual item of test equipment must follow the manufacturer's procedures. Refer to the manufacturer's publications and instructions for the equipment.

Dedicated Test Equipment 💻 Dedicated test equipment is used for specific vehicle applications. These are usually required for a specific vehicle manufacturer or for a specific system.

Fuel System Inspection and Repair The abbreviation R&R is short for the removal and replacement of components, or remove and reassemble components. The fuel system components will usually be removed, inspected and repaired or replaced only when faults occur. Before starting any work on fuel systems, always consider safety precautions applicable to the type of fuel. Obtain all safety equipment that may be needed for the task. Refer to manufacturer's instructions for any special precautions and particularly for releasing fuel pressure.

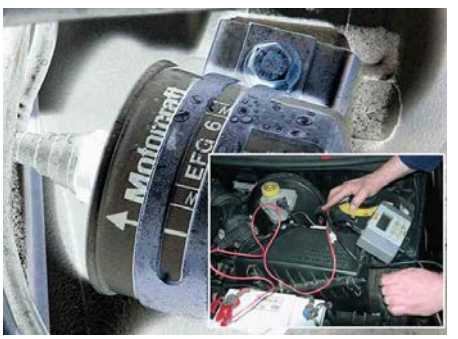

Fuel system components

Correct Adjustments It is important to follow manufacturers' instructions for all work that is carried out. The fuel systems must perform to environmental regulations. In order to ensure that the systems continue to meet regulations, they need to be correctly fitted and adjusted. It is not possible to guarantee any work unless it conforms to the original specifications.

Airflow meter adjustment

Cleanliness All fuel systems have components built to fine-engineering tolerances. In service, fine mesh fuel filters keep the components clean. It is equally important during repair work that the same standard of absolute cleanliness is maintained. On gasoline systems, small particles of dirt can block the very small holes in carburetor jets and fuel injectors. On diesel systems, small particles of grit that enter the injector pump or injectors can cause expensive damage. Always cap any open pipes or unions.

Fuel filter

Air filter

Special Tools There is a wide range of special tools that is needed to carry out repair and adjustment of fuel systems. Most of these are specific to one type of vehicle or one type of fuel system.

Adjusting Keys Special tools for use on the gasoline fuel-injection system include adjusting keys for Bosch Jetronic mixture strength. A special relay may be used in place of the pump relay so that fuel flow rates through individual injectors can be measured. Calibrated measuring containers are used for this test.

Adjustment key

Diagnostic Equipment There are many items of diagnostic equipment available to test fuel-system components. These include engine and exhaust gas analyzers. Multimeters can be used to check electrical and electronic component voltages and resistance.

Multimeter display and controls

Measuring Fuel Flow There is specific system equipment for measuring fuel flows from individual fuel injectors. This is to allow checks against specifications and for comparison against each other.

Injector flow test

Special Wrenches and Pullers
There is a range of special wrenches and pullers for removing and replacing injectors, sensors and other components on gasoline injection systems. There is also an injector cleaning system that can be used to remove a build-up of deposits in gasoline-injector nozzles. Fuel additives can also be used for this purpose.

Injector tools…

Come in many shapes…5

And sizes5

Pressure Gauges For carrying out pressure tests, there is a range of pressure gauges with adapters to suit all vehicle and fuel system types.

Fuel pressure gauge5

Adapter kit5

Electronic Diagnostic Equipment 💻 Electronic diagnostic equipment is used for many tests on the electrical and electronic circuits or components of fuel systems. Further tests include visual inspections for the condition of terminals and wiring. A useful test for intermittent faults or electrical failure is a 'wiggle' test of the wiring to see if this has any effect.

Strap Wrenches For removing and replacing fuel injectors, some special socket wrenches and pullers are required. These vary as to the type of injector and engine manufacturer. Strap wrenches used for engine oil filters can also be used on canister-type fuel filters.

Filter…5

Wrenches5

Other Systems For all engine repair work, it is worthwhile to remember that other systems can contribute to the symptoms, or be responsible for the failure of a specific component. Blocked air filters, defective catalytic converters and failure of emission-control components are three examples. All of these can affect the function of the fuel system.

Pressure Chargers Overhaul of pressure chargers may require special equipment. Bearings may need to be replaced or components set to very accurate dimensions. Manufacturer's tool kits will include the mandrels, supports and jigs, which should be used to ensure proper completion of the work.

Many special tools…[5]

Are used for turbo work[5]

Tools for Exhaust Removal Some useful tools for exhaust system removal are chain wrenches, for twisting seized pipes and oxyacetylene welding equipment for freeing off rusted joints. An air chisel may be necessary for cutting off components that will not be reused.

Chain cutter

Air cutter[5]

Chisels[5]

Hammer[5]

Exhaust Materials Exhaust materials, which are used frequently, include jointing compounds and a range of pipe clamps and hangers. These can be adapted to suit many applications. Use only recommended or genuine replacement parts.

Exhaust 'U' bolts

Exhaust sealant

Read the previous section again and note down some key bullet points here:

-
-
-
-
-

Test Equipment

Workshop Tools On early fuel systems, many diagnostic tasks could be carried out with general workshop tools and equipment. New systems require specialized diagnostic and measuring equipment. Refer to manufacturers' workshop manuals and data books for precise instructions. The following screens include some of the tools and equipment that may be needed when inspecting and working on fuel systems.

Exhaust Gas Analysis For exhaust-gas analysis, a special meter is needed. There is a range of individual gas meters as well as those that are part of an engine analyzer. Some meters give carbon monoxide (CO) and hydrocarbon (HC) readings only but are still very useful. For accurate analysis of relevant exhaust gas constituents (and statutory test purposes), a four-gas analyzer is needed. This will provide a readout on carbon monoxide (CO), carbon dioxide (CO_2), hydrocarbon (HC) and oxygen (O_2). Some of these analyzers have an additional readout to check the operation of catalytic converters.

CO meter

Exhaust gas analyzer

Electrical Meters A standard range of digital meters for volts, amps and ohms can be used to measure the operation of sensors and actuators. A dwell meter can also be used to measure the injector fuel-delivery pulse time or pulse width.

Calibrated Containers Special equipment consisting of calibrated containers is used to measure the quantity of fuel delivered by a set of injectors. These tests will determine whether all injectors are operating within specified limits. At the same time, the spray pattern can be examined. Injector sprays should show an even cone pattern.

Injector calibration

Timing-Advance Testing The advance-degrees meter has an adjusting knob, which is twisted to position the light flashes at the reference point. The meter shows the degrees of advance needed to reposition the strobe light flashes to the reference point. The meter reading is compared with the manufacturer's data.

Strobe light meter

Tachometer A tachometer is used to measure engine speed in revolutions (revs) per minute (rpm). It is connected to the ignition coil on gasoline engines or a pressure transducer on an injector pipe on diesel engines. Switches on the instrument select the number of cylinders and the type of engine.

Snap-on tachometer

Engine Analyzer There is a range of engine analyzers for use on both gasoline and diesel engines with electronic-control units. All are capable of running electronic and electrical test programs. The use of any individual item of test equipment must follow the manufacturer's procedures.

Engine analyzer in use

Dedicated Test Equipment Dedicated test equipment is used for some vehicle applications. These are usually required for a specific vehicle manufacturer or for a particular system.

Diagnostic and Test Equipment A general range of diagnostic and test equipment is available and can be used as a substitute for some of the dedicated test equipment functions. These tools include diagnostic test sequences, fault-code readouts and memory-clearing facilities.

Fault code reader

Snap-on scan tool5

Draining and Refilling Fuel Tanks Draining and refilling fuel tanks in a workshop is a high-risk activity. The chances of fuel spills and ignition leading to a fire and serious personal injuries or fatalities cannot be ignored. For this reason, it is always advisable to use a fuel-recovery system. This item of equipment allows almost complete collection of the fuel in a tank and makes it safe to remove and handle the tank with other appropriate safety precautions. The system consists of a large tank, an electrical pump, and hoses to reach the fuel in the tank. Bonding cables ground the vehicle to the recovery tank and to a suitable electrical supply. Follow the manufacturer's instructions for the use of this equipment.

Fuel recovery tank

Read the previous section again and note down some key bullet points here:

-
-
-
-
-

Customer Care

Customer Care Ignition problems account for many vehicle breakdowns. There are early warning signs that are often ignored by drivers. These include slight misfires, uneven running (particularly when the engine is cold), taking slightly longer to start than normal, and other similar problems, which are unlikely to prompt the owner to seek repairs. It is these sorts of problems that develop and lead to a vehicle breakdown at the most inconvenient times.

Keep the customer informed…

…at all times

Cold Starting Problems A cold starting problem may occur even though the car started without problem when the weather was warmer. If the driver had had the vehicle inspected earlier, the problem would not have arisen. A new set of plugs may have been all that was needed.

Customer Records There are two ways that a company can help customers to prevent ignition system breakdowns. The first is to maintain customer records and a system whereby customers would be contacted about the replacement of necessary parts at specified intervals.

Customer records

Seasonal Advice The second is to provide advice at suitable times of the year regarding the types of problem that may be experienced and how to identify the early warning signs. Most of these problems are seasonal, and a seasonal advice program may be a sensible approach in some parts of the country.

Short Journeys Infrequent use and short-trip use can lead to premature failure of the spark at the spark-plug tip. This occurs when the self-cleaning action of the spark plug tips fails as a result of the engine never reaching a normal operating temperature. This results in a build-up of carbon compounds on the insulator nose, which conducts the secondary circuit to ground, and therefore no spark is produced. There are two ways to overcome this problem.

Fouled spark plug

Advising Customers One is to suggest to the customer that the vehicle regularly be driven at longer intervals so that the engine fully warms up and the self-cleaning action of the plugs is achieved. The other is to have the plugs removed and cleaned at regular intervals, before the carbon compound build-up develops to a point where engine performance is affected.

Catalytic Converters For vehicles fitted with a catalytic converter, it is important that no excess fuel is allowed to enter the converter. If it does, it will burn and overheat the converter, causing premature failure. Advise customers that any misfire – however slight – should be corrected as soon as possible.

A damaged catalytic converter

Customers will appreciate advice that saves them money!

Fuel Leakage Concerning vehicle fires caused by fuel leaks, show customers where to look for fuel leaks and what to look for. Always advise customers to report any leaks or the smell of fuel around the vehicle or under the hood.

Keep customers informed if you find a leak

The Wrong Fuel… Advise customers of the potential harm if the wrong fuel is added to the fuel tank. Gasoline should never be put in a diesel vehicle vice versa. Tell them that if quantities greater than 5 percent have been added, then they should not attempt to start the engine but should have the system drained, cleaned and refilled.

Take care…

Service Schedules Most vehicle service schedules provide advice on the frequency for replacing the air filter element and cleaning the crankcase ventilation system. In some regions, there is a requirement for regular inspections of the exhaust emissions. Keeping records and advising customers of these requirements is a good service to provide.

Keep customer records up to date

Catalytic Converters Catalytic converters can be damaged when an excess amount of fuel is allowed to enter the converter and burn. This overheats the converter and can cause irreparable harm. Excess fuel can be passed into the converter while driving with a misfire, ignoring an engine management system warning light, or when attempting to jump start the engine. Advise customers of these situations and of the importance of reading the driver's instruction booklet that was supplied with the vehicle.

Tow starting is not recommended

Expensive Repairs Always encourage your customers to come back to you whenever they feel that something is wrong, no matter how small. These things can often be corrected before it develops into an expensive repair.

Advise customer to return if in any doubt

Dusty Conditions A vehicle that is only used for short journeys or in very dusty conditions may require a modified service schedule. Most manufacturers publish recommendations for abnormal use, and you can use these to schedule more frequent servicing for your customer.

Air cleaner details being pointed out to customer

Read the previous section again and note down some key bullet points here:

-
-
-
-
-

Theory and technology

Introduction and Engine Operating Cycles

Technology The modern motor vehicle engine is a complex machine and the power plant of the vehicle. The engine burns fuel to obtain power. The fuel is usually gasoline or diesel, although liquid petroleum gas (LPG) is sometimes used, and specialty fuels have been developed for some engines, such as those in certain racing cars.

E

ngine

Internal Combustion Engine Motor vehicle engines are known as 'internal combustion' engines because the energy from the combustion of the fuel and the resulting pressure from expansion of the heated air and fuel charge is applied directly to pistons inside closed cylinders. The term 'reciprocating piston engine' describes the movement of the pistons, which go up and down in the cylinders. The pistons are connected by a rod to a crankshaft to give a rotary output movement of the engine.

Air and Fuel In gasoline engines, the fuel is metered into the engine together with an air charge. . In diesel engines, the fuel is injected into a compressed air charge in the combustion chamber. In order for the air and fuel to enter the engine and for the burnt or exhaust gases to leave the engine, a series of ports are connected to the combustion chambers. The combustion chambers are formed in the space above the pistons when they are at the top of the cylinders. Valves in the combustion chamber at the ends of the ports control the air charge and exhaust gas movements into and out from the combustion chambers.

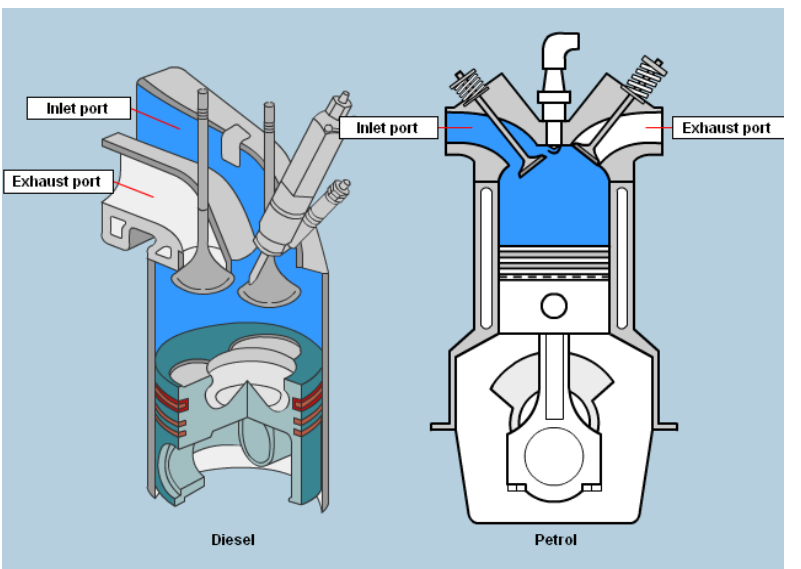

Poppet Valves The valves are 'poppet' and have a circular plate at right angles to a central stem that runs through a guide tube. The plate has a chamfered sealing face in contact with a matching sealing face in the port. The valve is opened by a rotating cam and associated linkage and closed and held closed by a coil spring.

Valves

The Four-Stroke Cycle (or Otto cycle) 💻 The opening and closing of the valves and the movement of the pistons in the cylinders follows a cycle of events called the four-stroke cycle or the Otto cycle after its originator.

✍ Sketch the four strokes of the 4-stroke cycle here

The Induction / Intake Stroke 💻 The four strokes of the four-stroke cycle are:

The induction or intake stroke when the piston is moving down in the cylinder from top dead center (tdc) to bottom dead center (bdc) and the inlet valve is open. The movement of the pistons increases the volume of the cylinder and air and fuel enter the engine.

The Compression Stroke 💻 The second of the four is the compression stroke when the piston moves upward in the cylinder. Both the inlet and exhaust valves are closed and the space in the cylinder above the piston is reduced. This causes the air and fuel charge to be compressed, which is necessary for clean and efficient combustion of the fuel.

The Combustion / Power Stroke 💻 The second of the four is the compression stroke when the piston moves upward in the cylinder. Both the inlet and exhaust valves are closed and the space in the cylinder above the piston is reduced. This causes the air and fuel charge to be compressed, which is necessary for clean and efficient combustion of the fuel.

The Exhaust Stroke Once the energy from the fuel has been used, the exhaust valve opens so the waste gases can leave the engine through the exhaust port. To complete the exhausting of the burnt gases, the piston moves upward in the cylinder. This final stroke is called the exhaust stroke.

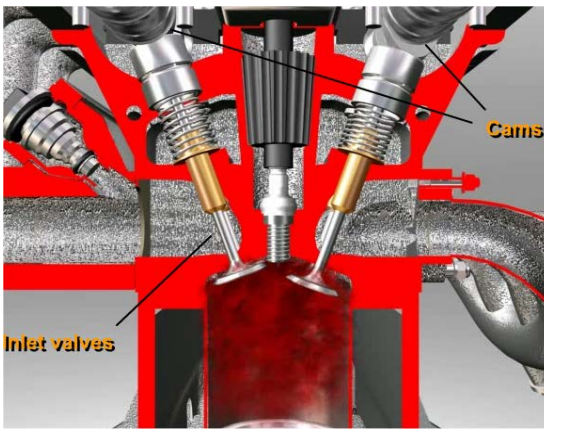

Four-Stroke Cycle The four-stroke cycle then repeats over and over again as the engine runs.

The Induction or Intake Stroke On the induction stroke of a gasoline engine, air and gas enter the cylinder, so the inlet valve in the inlet port must be open. On a diesel engine, only air enters the cylinder. A rotating cam on the camshaft provides a lifting movement when it runs in contact with a follower. A mechanical linkage is used to transfer the movement to the valve stem, and the valve is lifted off its seat so that the inlet port is opened to the combustion chamber.

Cylinder Charge The air and gas charge or air charge can now enter the cylinder. The inlet valve begins to open shortly before the piston reaches top dead center (tdc). The exhaust valve, which is operated by its own cam in the same way as the inlet valve, is beginning to close as the piston passes top dead center (tdc) at the end of the exhaust stroke. Valve overlap helps clear the remaining exhaust gases from the combustion chamber. The incoming air charge fills the combustion chamber as the last quantity of exhaust gas leaves through the exhaust port. This is known as 'scavenging' and helps cool the combustion chamber by removing hot exhaust gases and providing a completely fresh air charge.

Top Dead Center (tdc) and Bottom Dead Center (bdc) The terms 'top dead center' and 'bottom dead center' are abbreviated ''tdc' and 'bdc,' respectively. They are used to describe the position of the piston and crankshaft when the piston is at the end of a stroke and the axis of the piston and crankshaft bearing journals are in a straight line and at 0^0 (tdc) and 180^0 (bdc) of crankshaft revolution. To indicate degrees after and degrees before top dead center or bottom dead center, the letter 'a' or 'b' is added to 'tdc' or 'bdc.'

Rotational Position The rotational position in degrees of crankshaft revolution is used in engine data to show the timing positions for ignition, diesel fuel injection, and the opening and closing of the valves. The data may refer to an actual degree of revolution or be given a relative position before or after top dead center or bottom dead center.

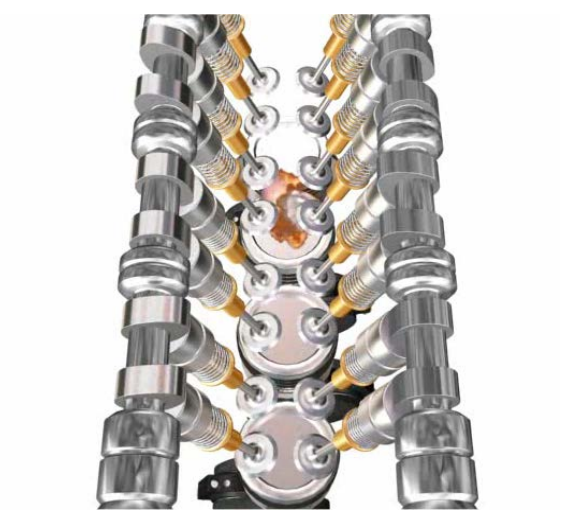

Explain the four-stroke cycle and why it can be described as ‘suck, squeeze, bang, blow…’

Read the previous section again and note down some key bullet points here:

-
-
-
-
-

Cooling Components and Operation

Coolant The coolant is a mixture of water and antifreeze. The antifreeze is needed because of the way in which water expands as it freezes. The force from that expansion is powerful enough to cause engine cylinder blocks and radiators to burst.

Antifreeze Suitable antifreeze is needed for the climate in which the vehicle is operated. Modern antifreeze formulations are also designed to give year-round protection by increasing the boiling point of the coolant for hot weather use.

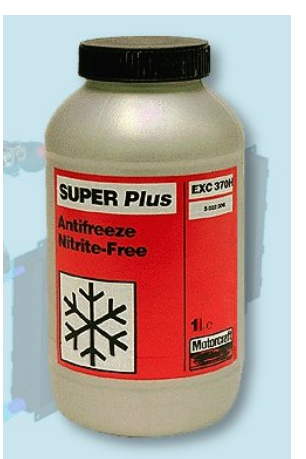

Antifreeze concentrate

Heat Transfer All three forms of heat transfer are used in the cooling system.

Convection occurs in the water jacket, creating internal coolant flows from the cylinder block to the cylinder head.

Conduction occurs through the cylinder and combustion chamber surfaces as heat passes to the coolant.

Radiation of heat occurs from the radiator and cooling fins when heat is passed to the atmosphere.

Heat can be transferred by…

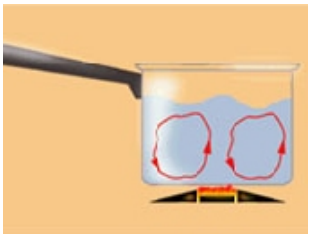

…convection

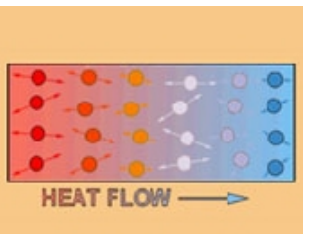

…conduction

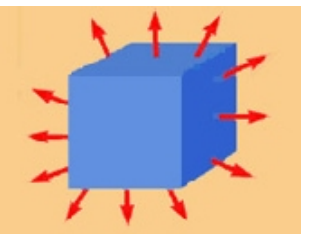

…and radiation

Rate of Heat Transfer The amount of heat transfer is dependent on four main factors:

The temperature difference between the engine and coolant.

The temperature difference between coolant and the air stream passing through the radiator.

The surface area of the radiator tubes and fins.

The rate of air and coolant flow through the radiator.

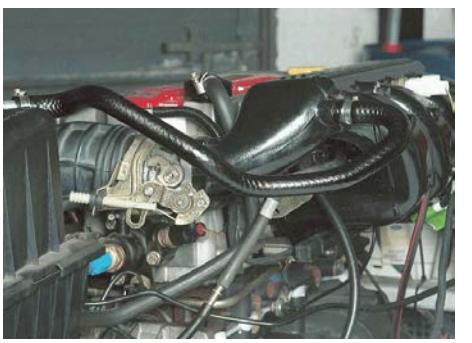

Components are designed for optimum performance

Thermostat Liquid cooling systems traditionally use a thermostat in the outlet to the top hose to control engine temperature.

A thermostat is a temperature-sensing valve that opens when the coolant is hot and closes as the coolant cools down. This allows hot coolant to flow from the engine to the radiator where it cools down and returns to the engine. The cooled coolant in the engine acts on the thermostat and it closes.

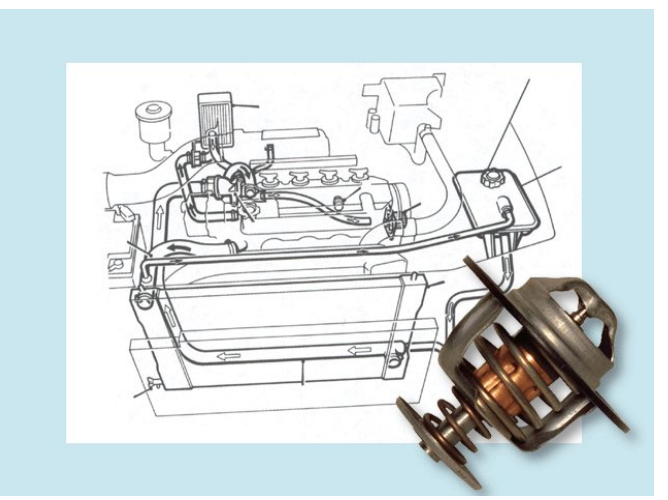

Cooling system and Thermostat

Coolant Flow The coolant re-heats in the engine. The thermostat opens and the cycle of hot coolant flow to the radiator and cool coolant returning to the engine starts again. Although this system provides a reasonably effective method of engine temperature control, it does produce a fluctuating temperature. However, a steady temperature is required for very clean and efficient combustion.

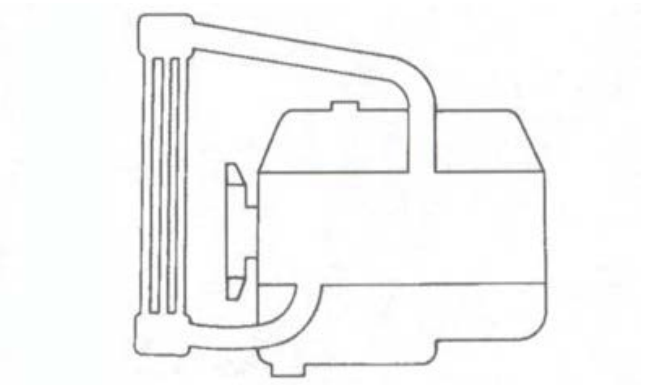

Hot and cold coolant flow

Bypass Mixing Cooling System Modern engine design is moving toward a system with the thermostat in the radiator bypass channel. When the thermostat opens it allows cold water from the radiator to mix with the hot water flow in the bypass, as it enters the water pump. This system provides a steady engine temperature and prevents the fluctuating temperature cycle of the earlier system. The modern system is shown here with arrows indicating the coolant flow.

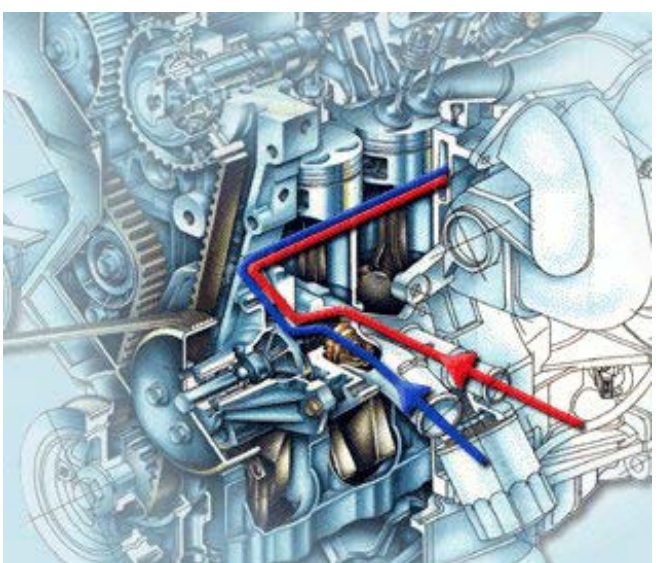

Coolant flow[1]

Heat Distribution The heat distribution within the engine needs to be controlled. The temperature around all cylinders and combustion chambers should be very similar. To achieve this, the heat removed by the cooling system has to be consistent for all areas of the engine. All modern engines have a fairly rapid coolant circulation within the engine so that an even temperature distribution occurs.

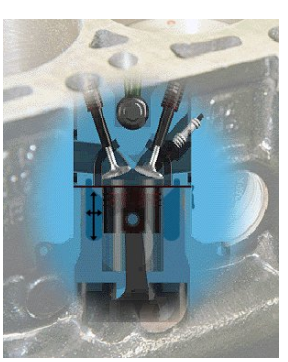

A water jacket

Water (Coolant) Pump The water (or coolant) pump draws the coolant through a radiator bypass channel when the engine is cool and from the radiator when the engine is hot. The impeller on the water pump drives the coolant into the engine coolant passages or water jacket. Careful design of the water jacket passages directs the coolant around the cylinders and upward over and around the combustion chambers.

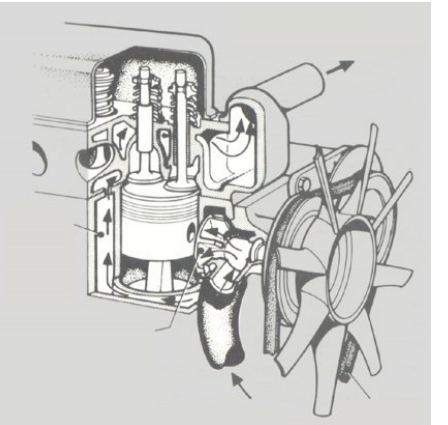

Water pump action

Coolant Density The density of coolant falls as it heats up, and as the temperature approaches the boiling point, bubbles begin to form. These bubbles can create areas in the water jacket where the coolant is at a lower density and the actual mass of coolant in that area is reduced. The reduced mass of coolant cannot be effectively heated in order to carry heat out of the engine.

Cavitation Another problem of poor heat transfer and lowered coolant density occurs when the rapid flow of coolant into and out of restrictions in the water jacket induces a phenomenon known as ”cavitation.” This results in localized drops in pressure and density in the coolant.

Heat Distribution The two causes of localized coolant density change – bubble formation and cavitation – can seriously affect the performance of the cooling system. This is because an even heat distribution around the cylinders and combustion chambers is not maintained.

Boiling water

Pressurized Cooling Systems To overcome these problems, all liquid cooling systems are pressurized. When hot, most modern systems have an operating pressure equivalent to about one atmosphere (1bar, or 100 kPa).

Expansion The pressure is obtained by restricting the loss of air above the coolant in a radiator header tank or an expansion tank. As coolant heats up, it expands. If the air above the coolant has less space to occupy and it cannot immediately escape, it increases in pressure.

Expansion tank

Radiator Pressure Cap A pressure-sensing valve in the radiator cap allows pressure that exceeds the system pressure to escape, but retains the operating pressure.

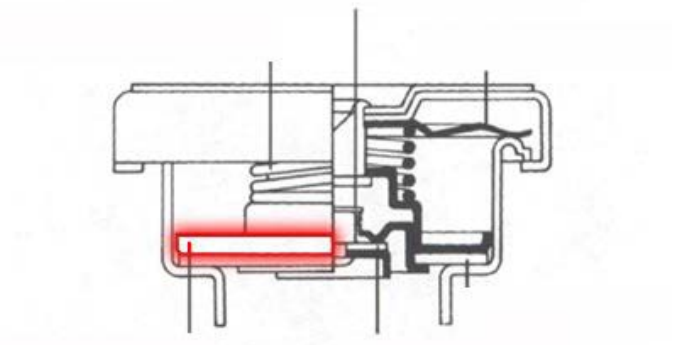

Radiator pressure cap details

Increased Coolant Density The pressure in the system acts on the coolant to increase the density, which would otherwise have fallen without the increase in pressure. This helps to reduce the risk of cavitation and to increase the boiling point of the coolant under pressure. The advantages are a more efficient cooling system with a higher safe operating temperature. It can also be used at high altitudes without the need for modification.

Pressure Cap Vacuum Valve As the engine cools down, the coolant contracts and the pressure drops. A vacuum valve in the pressure cap allows air to return to the system. This prevents depressurization below atmospheric pressure and the risk of inward collapse of components. An early sign of the failure of this valve to open is a top hose that has collapsed.

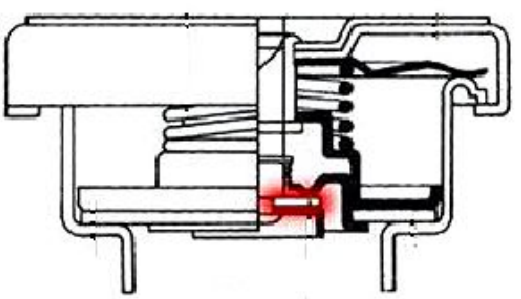

Vacuum release

Caution, Attention! The main danger from a pressurized cooling system is one of personal safety. If the coolant were not pressurized, it would be possible for the temperature to exceed the boiling point.

Cap Removal The risk of severe burns and scalds is highly likely if the pressure is suddenly released. Removing the pressure cap when the engine is hot can create the conditions for instantaneous boiling throughout the cooling system. A violent jet of steam and boiling water is likely to be ejected from the radiator or expansion tank.

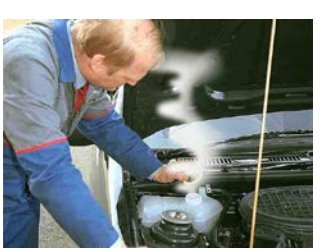

Coolant may boil if pressure is released

Adding Water to a Hot Engine A similar jet of steam occurs when water is added to an overheated engine that is still very hot. Adding cold water or even hot water to a dry, hot engine can cause cracking in the cylinder block and cylinder head. Cracks can also be found in engines that have run dry of coolant and overheated in and around the combustion chambers and cylinder block.

Do NOT add coolant to a hot dry engine!!

Summary A cooling system is needed to prevent engine damage caused by overheating.

It also helps to reduce emissions by shortening the engine warm-up time.

Heat is used from the cooling system to operate the heater.

Name and state the purpose of FIVE main cooling system components.

Read the previous section again and note down some key bullet points here:

-
-
-

Exhaust Systems

System Requirements The exhaust system has to carry the exhaust gases out of the engine to a safe position on the vehicle, silence the exhaust sound and cool the exhaust gases. It also has to match the engine gas flow, resist internal corrosion from the exhaust gas and resist external corrosion from water and road salt.

System Components The exhaust system has to carry the exhaust gases out of the engine to a safe position on the vehicle, silence the exhaust sound and cool the exhaust gases. It also has to match the engine gas flow, resist internal corrosion from the exhaust gas and resist external corrosion from water and road salt.

Exhaust system

High Temperatures The exhaust gases are at a very high temperature when they leave the combustion chambers and pass through the exhaust ports. The exhaust manifold is made from cast iron in order to cope with the high temperature. The remainder of the exhaust system is made from steel, which is alloyed and treated to resist corrosion.

Down Pipe or Front Pipe The down pipe or front pipe is attached to the manifold with a flat or ball flange. This joint is subject to bending stresses with the movement of the engine in the vehicle. To accommodate the movement, and reduce stress fractures, many flange connections have a flexible coupling made from a ball flange joint and compression springs on the mounting studs.

Exhaust Movement Another system, to accommodate movement, is a flexible pipe made up from interlocking stainless steel coils or rings. Where a flexible joint is not required, the front pipe may be supported with a bracket welded to the pipe and bolted to a convenient position on the engine or gearbox. Where a catalytic converter is used, it is fitted to the front pipe so that the exhaust heat is used to aid the chemical reactions taking place. The front pipe connects to an expansion box or silencer. The exhaust gases are allowed to expand into this box and begin to cool. The gases contract and slow down as they cool.

Flexible joint

Silencers or Mufflers Silencers are constructed as single or twin skin boxes. There are two main types. These are the absorption type, which uses a glass fiber or steel wool to absorb the sound, and the baffle type, which uses a series of baffles to create chambers. In the baffle type, the exhaust gases are transferred from a perforated inlet pipe to a similarly perforated outlet pipe. These silencers have a large external surface area that radiates heat to the atmosphere. Additional pipes and silencers carry the exhaust gas to the rear of the vehicle.

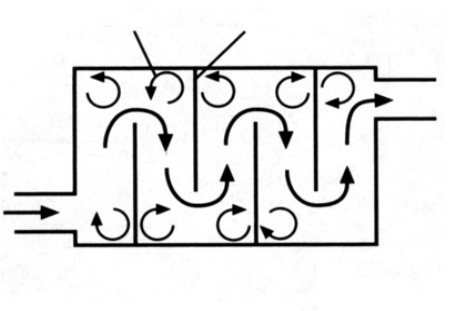
Baffle silencer

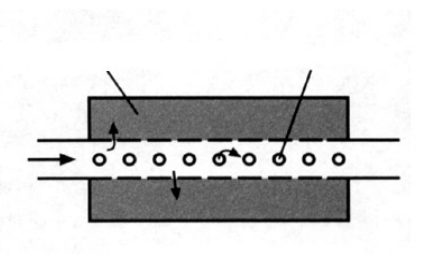
Absorption silencer

Joints Pipes are joined by a flange or clamp fitting. Flange connections have a heat resistant gasket and through bolts to hold the flange together. Clamp fittings are used where pipes fit into each other. The larger pipe is toward the front and the smaller fits inside. A ring clamp or 'U' bolt and saddle are tightened around the pipes to give a gas tight seal. An exhaust paste is usually used to improve the seal of the joint. The exhaust system must be sealed in order to prevent toxic exhaust gases from entering the passenger compartment.

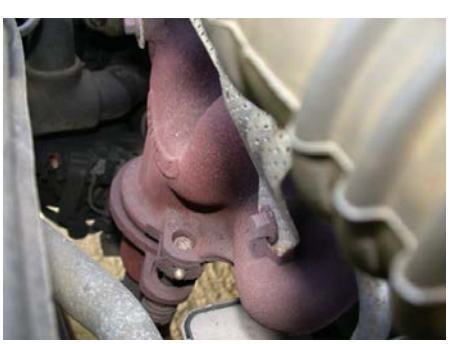
Flange connections

Pipe connections

Exhaust Mountings A small water drain hole may be used on the underside of some silencers. This is to reduce internal corrosion from standing water in the silencer body. The exhaust is held underneath the vehicle body on flexible mountings. These are usually made from a rubber compound. Many are made as a large ring that fits on hooks on the vehicle and the exhaust pipe brackets. Other mountings are bonded rubber blocks on two steel plates.

Flexible…

Mountings

Heat Shields Heat shields are fitted to the exhaust or to the vehicle floor, to prevent the ignition of sound deadening and anticorrosion materials. Catalytic converters become very hot in operation. It is important that all heat shields are correctly fitted and positioned to insulate the vehicle from the high temperature of the catalytic converter.

Describe the difference between a baffle and absorption silencer.

Read the previous section again and note down some key bullet points here:

-
-

Air Pollution from Motor Vehicles

Introduction Atmospheric pollution has become a serious problem to the health of people and to the environment. Many urban areas are now heavily polluted, with people suffering from the effects of vehicle exhaust pollution.

Fossil Fuels There have been many changes in climatic conditions in the world. Many of these have occurred over a long period and animals and plants have adapted to the changes naturally. However, the rapid burning of fossil fuels during this century has increased carbon dioxide levels in the atmosphere. The greenhouse effect is a global problem that could bring about warming of the planet.

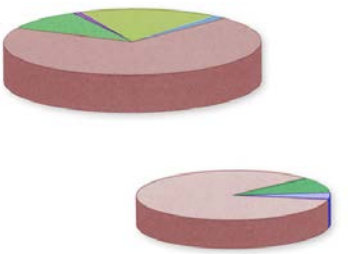

Composition of exhaust

Carbon Dioxide Carbon dioxide allows the sun's heat in, but reduces the heat radiated outward, causing the earth to warm up. Many studies of the warming process indicate that the rate of earth warming is increasing too quickly for animals and plants to adapt. During the history of the Earth, similar rapid changes have brought about the extinction of some species of animals and plants.

Weather Patterns When weather patterns change, arid areas become wet and wet areas become dry. Drought conditions become common in the heavily populated areas and other areas suffer severe flooding. As the distribution of populations and agricultural production are linked they end up in the wrong climatic conditions. The consequences are severe shortages of water and poor agricultural production.

Ozone Layer A layer of ozone in the stratosphere filters harmful radiation. Ozone (O_3) is a form of oxygen. Vehicle emissions and other industrial chemicals such as the CFCs used in refrigeration, air conditioning and aerosols, rise up into the stratosphere and chemically combine with the ozone. This causes it to break down into less beneficial substances. The deterioration of the ozone layer allows an increase in the harmful radiation that reaches the Earth's surface. This harmful radiation can cause skin and other cancers.

Radiation is harmful

Environmental Regulations Environmental regulations are now in place to find safer alternatives or to reduce the production and use of the most harmful pollutants. Other regulations and agreements are seeking to reduce the production of carbon dioxide by improving the efficiency of fossil fuel burners. Improvements in retaining the energy produced by insulation and other methods will also be used.

Alternative Fuel Sources Motor vehicles burn a large amount of fossil fuels and are responsible for a significant amount of carbon dioxide and airborne pollution. Vehicle designs are concentrating on weight reduction, aerodynamics, reducing rolling resistance, and on fuel-efficient engines. Alternative fuel sources have also been developed in order to reduce fossil fuel usage and to conserve the world's stock of these fuels.

Ford Prodigy - Hybrid vehicle[2]

Lead Lead has, until recently, been used as an additive in gasoline in order to slow down the combustion process. This helped eliminate knocking or pinging in the engine. It also made engines more efficient; but the lead does not burn. Lead passed into the atmosphere from the exhaust and created airborne concentrations that were capable of causing health problems.

Lead Poisoning Lead poisoning causes many physical disabilities including brain damage. For this reason lead additives are no longer used. Modern engines are now designed to run on lead free fuel in order to remove airborne lead pollution. There may be a small portion of naturally occurring lead in some fuels but the amount would be very low.

Lead additives have now been replaced

Sulfur Another naturally occurring substance in fossil fuels, particularly diesel, is sulfur. The sulfur chemically reacts during combustion with oxygen in the air to form sulfur dioxide. This is released from the engine into the atmosphere. In the atmosphere, it combines with water to form sulfuric acid. This falls as acid rain and destroys trees, plants and other vegetation and aquatic life in streams, rivers and lakes. Fuel suppliers remove or reduce the amount of sulfur during the refining process.

Combustion The combustion of fuel inside the engine is a chemical process that combines the carbon and hydrogen in the fuel with oxygen in order to release energy. Slightly less than 20% of air is made up from oxygen. Complete combustion produces carbon dioxide (CO_2) and water (H_2O). Neither of these is directly harmful. Both occur naturally in large concentrations in the atmosphere, but carbon dioxide concentrations are increasing and contributing to the greenhouse effect.

Incomplete Combustion Incomplete combustion leaves some of the carbon and oxygen not fully combined. The result is carbon monoxide (CO), which is toxic. Small quantities of carbon monoxide are dangerous because it attaches to red blood cells. This reduces the oxygen that they normally carry around the body. The result is oxygen deprivation, brain damage and fatality.

Unburnt Fuel Another product of incomplete combustion is particles of fuel that have not been burnt. These are carried with the exhaust gases into the atmosphere and are called unburnt hydrocarbons (HC). Even small amounts of hydrocarbons in the atmosphere can cause respiratory problems.

Engine Oil Engine oil drawn into the combustion chamber, either from the inlet valve stem or by bypassing the pistons, can also be sources of hydrocarbon pollution. Oil vapors form in the engine crankcase and can escape into the atmosphere. A positive crankcase ventilation system is now used to draw the vapors into the engine where they are burnt to form water and carbon dioxide.

Evaporative Emissions Vapor in the tank was vented to the atmosphere at one time. This is no longer the case. A charcoal filter is used to prevent the loss of fuel vapor but will still allow for the expansion of the fuel when the weather is hot. The fuel tank must be vented to the atmosphere to allow air to flow into the tank as the fuel is used. The fuel vapor in the charcoal canister is drawn into the engine and burnt.

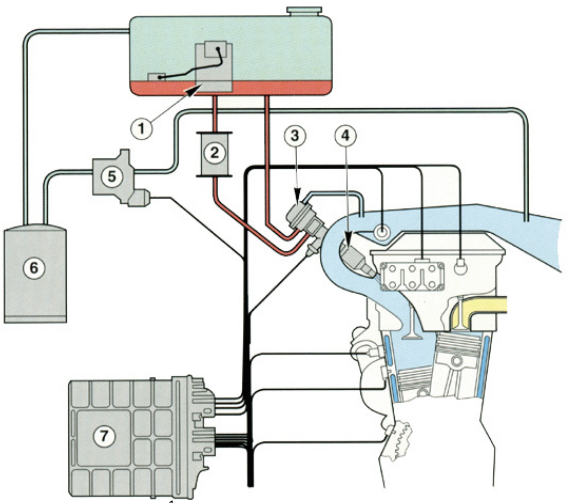

Emissions control system[1]

Nitrogen Oxides Air consists of approximately 80% nitrogen, which under normal circumstances is an inert gas. An inert substance is one that has very little chemical reaction and does not burn or mix easily with other chemicals. Nitrogen however, will mix with oxygen under high temperature to form nitrogen oxides (NO_x). These combine in exceptional geographical and meteorological conditions to form smog, acids and increases in low-level ozone. This can create a very unpleasant atmosphere in which to live. Many respiratory and asthmatic fatalities occur in these conditions.

Air-Fuel Ratio Air consists of approximately 80% nitrogen, which under normal circumstances is an inert gas. An inert substance is one that has very little chemical reaction and does not burn or mix easily with other chemicals. Nitrogen however, will mix with oxygen under high temperature to form nitrogen oxides (NO_x). These combine in exceptional geographical and meteorological conditions to form smog, acids and increases in low-level ozone. This can create a very unpleasant atmosphere in which to live. Many respiratory and asthmatic fatalities occur in these conditions.

Exhaust Gas In order to reduce the amount of oxygen in the air charge a gas that is low in oxygen can be introduced. This maintains the total air charge mass to give good compression pressures and efficient operation of the engine. The available gas is the exhaust gas that has already used up its oxygen content during combustion. The addition of a regulated charge of exhaust gas reduces the oxygen content of the new charge to suit the amount of fuel delivered. This in turn reduces the combustion temperature and limits the formation of nitrogen oxides. Catalytic conversion of any remaining harmful gases can create a clean exhaust gas.

Read the previous section again and note down some key bullet points here:

-
-
-
-

Environmental Protection

Reducing Pollution Vehicle engine and component manufacturers have put a great deal of effort into reducing pollution. Lead is no longer needed in gasoline, as other less damaging substitutes have been found. The changes in the fuel have required hardened valves and valve seats and changes to the ignition timing and fuel delivery systems.

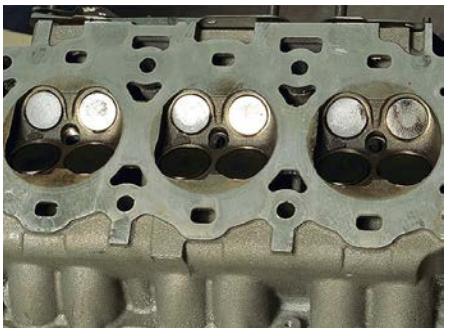
Valves

Air Intake Systems Air intake systems have been developed from a simple ducting to a complex airflow design, which adapts to the changing speed and load conditions of the engine. Filtration is also an important aspect.

Air filter

Electronic Control Electronic control of the combustion process has achieved reductions in CO, NO_x and HC emissions. Exhaust gases are monitored in an electronic engine control module from signals sent from a lambda or oxygen sensor in the exhaust. This allows fuel and air supplies to be closely matched for near perfect combustion.

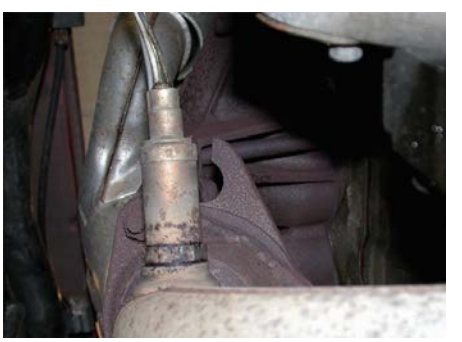
Lambda sensor

Pollutant Control The remaining pollutants in the exhaust gases, which cannot be controlled by the electronic systems, can be converted into less harmful substances. This is done by using air injection into the exhaust and/or a catalytic converter.

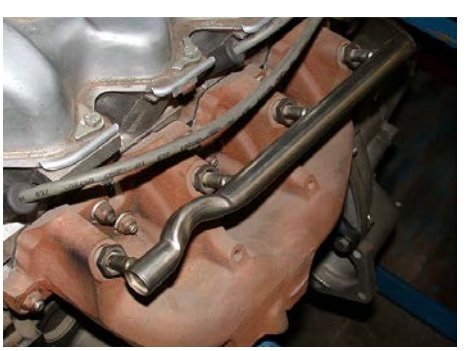
Air injection

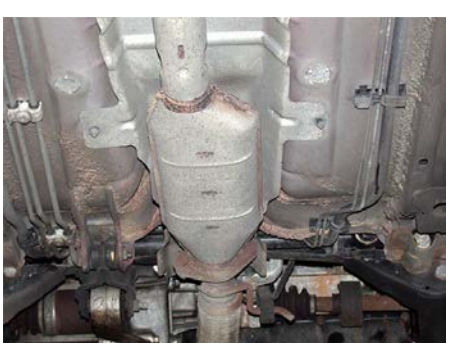
Catalytic converter

Atomization Developments to improve the atomization and mixing of the fuel in the incoming air stream include heating the inlet manifold or heating the air as it enters the inlet manifold. This can be done with a heating element below the carburetor or preheating the air by ducting the air supply over the exhaust manifold.

Air temperature control valve

Oil and Fuel Vapors Oil and fuel vapors are trapped and routed through the engine to be burnt. Positive crankcase ventilation and a charcoal filter in an evaporative canister are used for this purpose. Nitrogen oxide formation is reduced with exhaust gas re-circulation (EGR).

EVAP canister

Super-charging and Turbo-charging Engine performance has been increased without an increase in weight by the use of supercharging and turbocharging. Other emission control devices that correct the ignition timing and fuel delivery are covered in the appropriate learning programs. These devices improve the performance of those systems as well as reducing harmful exhaust emissions.

Turbocharger

State FOUR benefits of electronic control.

Explain why pollution should be controlled.

Read the previous section again and note down some key bullet points here:

-
-
-
-

Air Supply System and Intake Air Temperature Control

Introduction The air supply system has to provide clean air, in sufficient quantity to the engine. It must supply equal quantities of air to each cylinder. This will assist fuel vaporization and even mixture distribution. Creating a swirl in the airflow as it enters the cylinders is also desirable. Warm air for cold starts and then temperature controlled air for normal running is essential. Finally, the system must silence the airflow and provide a flame trap in the event of fire in the inlet manifold.

System Components The air supply systems for most vehicles are similar. They consist of the air intake duct, an air temperature control mechanism, an air cleaner housing and filter, an inlet manifold and inlet ports. A position for an exhaust gas re-circulation system may also be included. For multipoint or port fuel injection engines, the system will also include a throttle body housing and an air flow meter.

Throttle body

Airflow meter

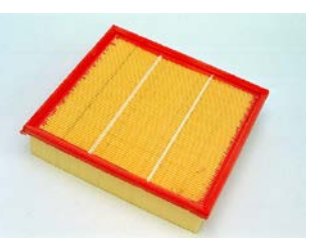
Air filter

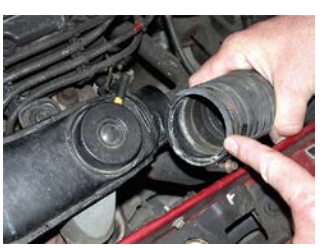
Ducting

Clean Air Clean air is required in the engine to prevent particles of dust and grit from damaging or blocking engine and fuel supply components. Air is filtered through an element in the air cleaner. Most air cleaner elements are micro-porous paper, which allows a good flow of air but traps airborne dust. Other elements have included oiled wire gauze and foam rubber. The air cleaner housing and the filter elements are cleaned or replaced at scheduled service intervals.

Air filter

Paper Elements Paper elements are folded to provide a large surface area and long service life. The element can be wrapped to form a circular element if required. The outside edges are sealed with an integral or separate rubber sealing ring.

Circular type air filter

Air Cleaner Housings Air cleaner housings have internal ducting to distribute the air over the full surface of the filter. The airflow in some filter housings is made to swirl so that airborne dirt is thrown out and falls into a dust trap in the base of the filter. The airflow into a flat filter is from the underside so that dirt falls out from below rather than into the top of the filter.

Filter in its housing

Inlet Manifolds The inlet manifolds on modern engines are usually of the same length and diameter so that all cylinders are supplied with the same volume and airflow characteristics. Early engines with manifolds of different length pipes often produced slightly different combustion patterns in each of the cylinders.

Modern inlet manifold

Old inlet manifold

Throttle Plate At the entrance to the inlet manifold is the throttle plate, which controls the flow and quantity of air entering the engine. Diesel engines do not use a throttle plate unless a vacuum is required for the control or operation of other systems.

Intake Air Heating for Cold Engines Mixture formulation occurs in the inlet manifolds of carburetor and mono-point fuel injection engines. These manifolds are heated to aid atomization and distribution of the fuel in the air charge. This is particularly important when the engine and the air supply are cold. Inlet manifolds were made from aluminum, which readily conducts heat and warms evenly and quickly. However, plastic is now becoming common.

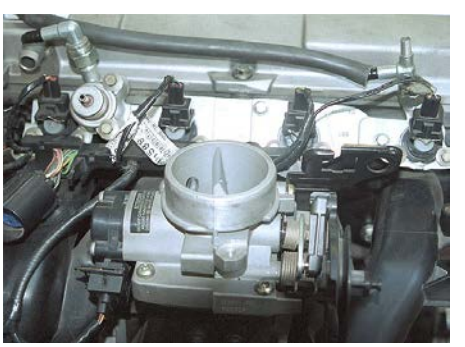
Plastic inlet manifold

Manifold Heating On old type engines, where the inlet manifold sits over the exhaust manifold, a heat exchange is provided by connecting the two manifolds together. This design is not suitable for cross flow and V-shaped engines. One method of inlet manifold heating on these engines uses the engine cooling system. Water passages in the manifold are connected to the water jacket so that coolant flows immediately when the engine is started.

Water heated inlet manifold

Electrical Heating Another method that does not use the cooling system has an electrical heater element under the center of the manifold, which operates when the engine is started from cold. A temperature-sensing switch in the engine coolant cuts off the electrical supply when the engine temperature rises.

Electric manifold heater

Heated Air Supply On some engines, the incoming air supply is heated. Two methods have been used for this. One heats the air below the carburetor and the other before it enters the air cleaner. The early fuel evaporative system has an electrical heater element below the carburetor, to heat the air flowing into the manifold. This has been used on some older engine designs in American vehicles. The heater element is supplied with an electrical current through a relay and controlled by an engine temperature-sensing switch.

Heated air improves vaporization

Air Temperature Control Heating the air entering the inlet duct assists in atomization and fuel distribution in the air charge. The air is warmed by being passed over the exhaust manifold before being drawn into the air duct. This is only necessary when the air is cold. When the engine temperature increases, the air density, and therefore mass, would be reduced if heating of the air were continued. At an engine temperature of about 50ºC, the full air supply is drawn from a cold position in the engine compartment or at the front of the vehicle. Between a cold engine and 50ºC progressive mixing occurs.

Pick up for hot air on an exhaust manifold

Flap Control The ducting of warm or cool air is controlled by a flap in the air cleaner intake. This allows either a normal air flow or one from over the exhaust manifold. Two methods of thermostatic air cleaner operation are used. One type uses a vacuum motor and bimetallic vacuum valve, and the other uses a wax pellet actuator.

Vacuum System The layout of the vacuum system is shown here. The bimetallic valve responds to the temperature of the incoming air stream and opens or closes the vacuum supply from the inlet manifold to the vacuum motor. The motor reacts to the vacuum supply to move the flap and mix warm and cool air.

Wax Pellet Actuator The wax pellet actuator is set in the warm air supply duct and holds the flap across the cool air duct. As the wax pellet is heated by the warmed air, it expands and forces the insert pin or piston out. The pin is connected to a lever, which pulls the flap open to allow a cool airflow. The lever and flap are held by a calibrated return spring and actuated by the force of the expanding wax pellet.

Wax pellet warm air control

Air Intake for Multi-Point Fuel Injection The air supply components for multipoint fuel injection engines have additional items for the control and measurement of the air supply. Sensors for the fuel injection electronic control unit are included in the air supply system. An actuator for controlling the engine fast idle speed is also included. The fuel injectors are fitted into the inlet ports or in a special housing, between the inlet manifold and the inlet ports.

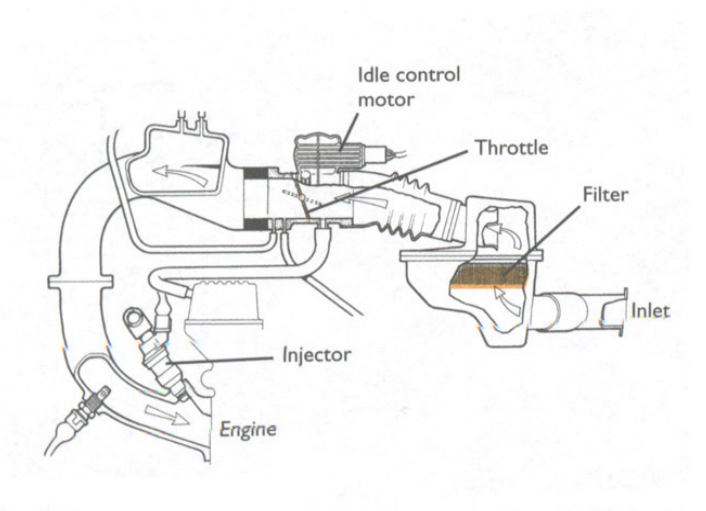

Air supply system

Inlet Manifolds The air supply to each cylinder passes through equal length and diameter tubes of the inlet manifolds. Inlet manifolds made from thermoplastics are replacing the traditional aluminum types. Feeding the manifold tubes is a plenum chamber, which holds a large volume of air so that each intake tube receives an equal air supply. The airflow will swirl in the intake tubes. Careful design of the shape and direction of the tubes is required to make this happen. Another factor affecting the swirl is the amount and speed of the airflow.

Variable Length Inlet Manifolds Many engines have a dual intake system that responds to low and high engine speeds. These systems have valves that open at higher engine speeds to balance the pressure in the two intake manifolds, or open to allow a secondary air supply to provide an adequate airflow for the higher engine speed. These systems have been developed to meet the changing airflow and swirl characteristics, which occur with increases in air mass and speed.

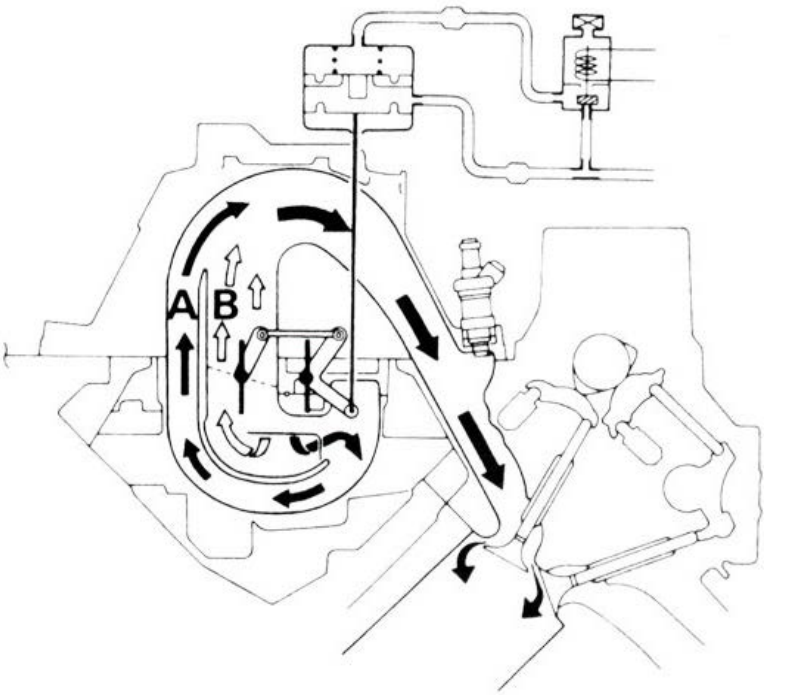

Inlet tracts change at different speeds

Explain why intake air temperature is controlled.

Read the previous section again and note down some key bullet points here:

-
-
-
-

Ignition Introduction

Ignition An ignition system is required for gasoline engines. This system provides a spark in each combustion chamber in order to ignite and start the combustion of the fuel in the cylinder. The abbreviation SI, which stands for Spark Ignition, is sometimes used to describe these engines.

The Spark The spark occurs when a high-voltage electric current is made to jump across the gap between the electrodes of a spark plug.

Spark Plug A spark plug is screwed into the cylinder head with the electrodes sitting just inside the combustion chamber.

Spark plug from inside the engine

High Voltage A high-voltage electric current of approximately 10,000 volts is needed to jump across the gap between the spark plug and electrodes when the engine is at normal operating conditions and all components are properly adjusted. A higher voltage is required if the spark plug gap is too large.

Ignition coil

Ignition Coil The high voltage is produced in the ignition coil and distributed to the spark plugs by thickly insulated cables and conductors in the distributor. These components make up the high-voltage secondary circuit.

Primary Circuit There is also a primary circuit operating at or below battery voltage. The primary circuit controls the secondary circuit for both the production of the high voltage from the coil, and for the ignition timing.

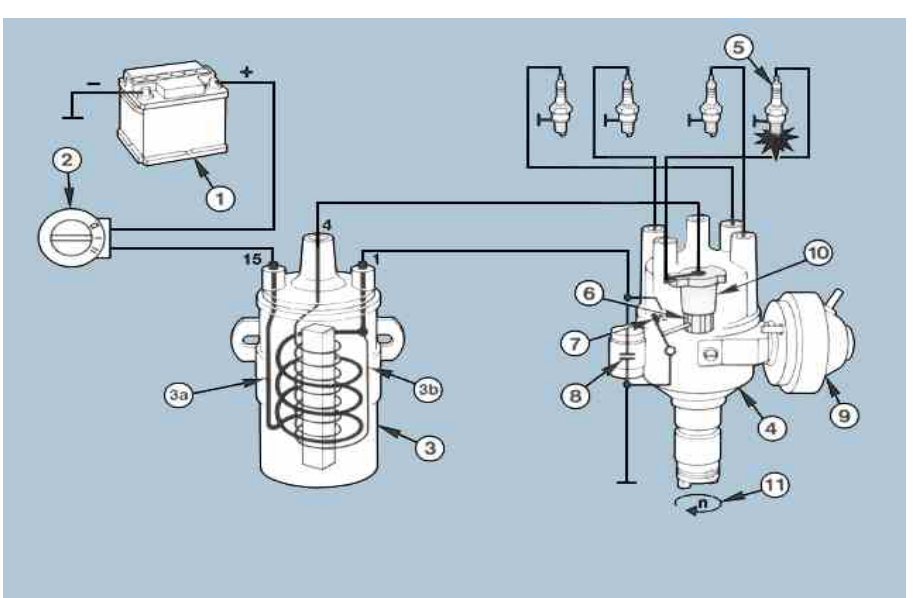

Ignition circuit[3]

Timing Ignition timing is given in degrees of crankshaft rotation. Zero degrees is at top dead center (tdc) of the piston stroke. Degrees before (btdc) or after (atdc) top dead center refer to an amount of crankshaft rotation. Timing marks on the engine at tdc and settings of degrees before tdc are provided for the checking and adjustment of ignition timing. The timing marks are situated on the crankshaft or flywheel and on the engine block or a cover panel.

Timing marks

Advanced Ignition If ignition timing is not to specification, the engine can be damaged. Ignition that occurs too early is called “advanced” and leads to knocking or pinking. This can be heard as a rattle when the engine is under load or accelerating. Fuel consumption and exhaust gas pollution increase. Using gasoline with a lower octane rating than that specified for the engine will also cause pinking.

Damaged piston

Retarded Ignition Ignition that occurs too late is called “retarded.” This causes overheating, poor performance, increased fuel consumption, and exhaust gas pollution.

Emission due to retarded ignition

Development In recent years, ignition systems have been developed to meet the ever more stringent specifications of exhaust emission regulations.

Conventional

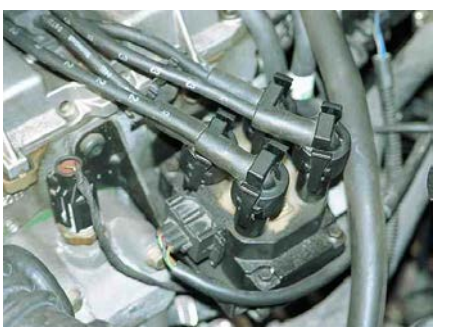
Distributorless

Regulations These regulations have required reductions in all harmful gas emissions and engine designs that ensure the reliability of meeting the specifications for many thousands of miles of vehicle use.

High mileage!

Early Systems Early ignition systems using distributors for control of the ignition spark and timing could not provide accurate and reliable ignition performance for more than a few thousand miles.

State FOUR disadvantages of contact breaker ignition systems.

Read the previous section again and note down some key bullet points here:

-
-
-
-
-

Electronics and System Operation

Microelectronics The developments in microelectronics and solid state circuitry produced suitable replacements for some of the ignition's primary-circuit mechanical-switching components. The use of these reduced some of the wear problems.

Distributor

Pulse generator

Amplifier

Distributor drive

Transistor Switching Transistor switching allowed very low control currents and new types of sensors that send signal currents to the transistors. These have no mechanical contact and are wear-free. These developments improved ignition timing reliability, and further changes improved the primary circuit performance, resulting in better spark generation.

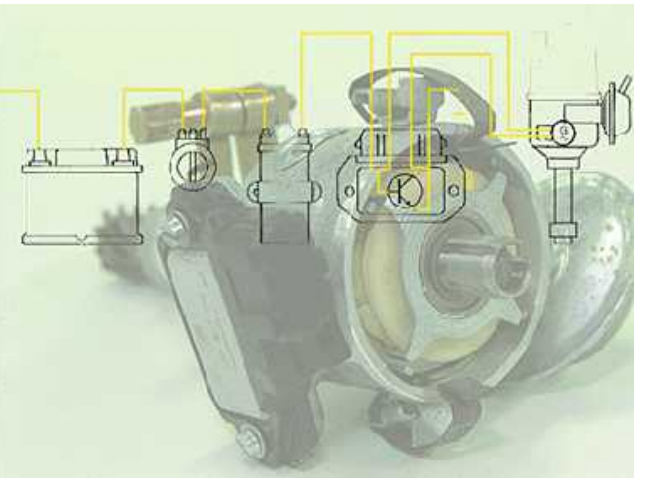
Electronic system

Open Loop Microprocessor ignition systems were originally open-loop systems using engine position, speed, and load sensors to provide data. The data were compared in the engine control module to a pre-programmed map of ignition timing positions for all conditions.

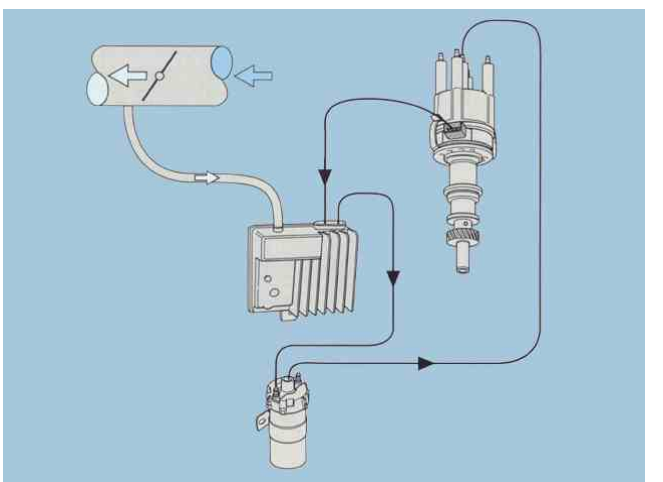
Digital system[1]

Engine Control Module An engine control module carries out all of the functions of the primary circuit, including spark generation control, and the advance and retard of the ignition timing for speed and load conditions. Because there are no moving parts, the system is wear-free and has high levels of accuracy and reliability.

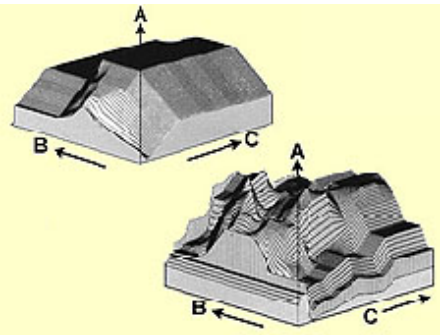

Data maps[3]

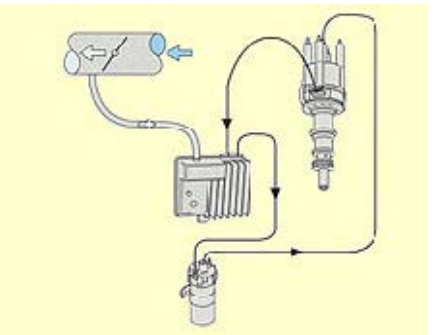
Digital system[1]

Electronic Control Unit Many modern ignition control circuits in the electronic control unit (ECU) are closed-loop systems using a knock sensor to provide feedback to the ECU, which adjusts the timing to a point, just a few degrees after the position where the engine knocks. This provides the most effective ignition-timing position.

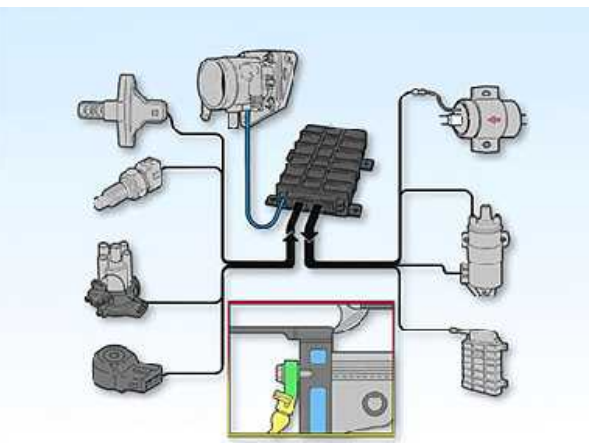
Knock sensor and system[1]

Integrated Systems The integration of fuel and ignition electronic-control microprocessors into one engine management system is now common. The latest developments have seen the connection of all vehicle electronic control systems to form a powertrain control module (PCM) or a vehicle control module (VCM).

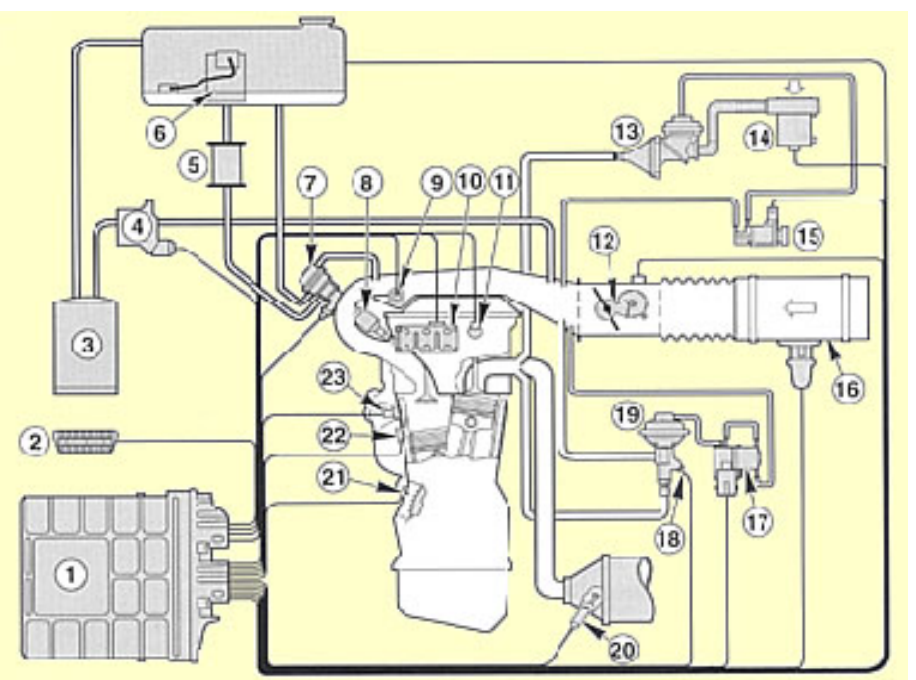

Engine management[1]

Secondary Circuit The ignition secondary circuit components remained similar during the early developments of electronic primary circuit controls. The traditional distributor was fitted with an electrically insulated cap with turrets for each cylinder and the input from the ignition coil.

Rotor and Cap A rotor fitted to the distributor spindle ran in contact with the center input contact in the cap and aligned with the segment conductors for each cylinder in turn as the rotor rotated. The engine firing order matched the rotation of the rotor and the positions of the turrets on the distributor cap.

Rotor in cap

Secondary Distributor The secondary circuit-switching distributor retains the rotor and cap components, but the primary circuit control is fully electronic.

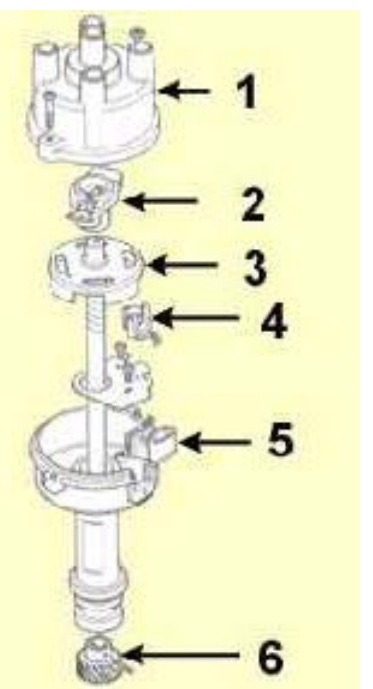

Secondary distributor

Distributorless Ignition Distributorless ignition systems have a coil or coils that are directly connected to the spark plugs.

DIS Coil and leads

Spark Plugs Because of changes in the materials used during the manufacturing process, spark plug life is now much longer than it used to be, and plug performance remains consistent for many thousands of miles.

Old spark plugs

New spark plugs

Ignition Coil The main component of all ignition systems is the ignition coil. It produces the high voltage needed to ignite the fuel by making a spark across the gap between the spark plug electrodes inside the engine combustion chambers. The outputs from the coil are pulses of high voltage that result from automatically switching on and off a control current through the coil. The automatic switching matches the rotation and firing order of the engine and the positions of the pistons.

Transformer Action The ignition coil is a voltage transformer consisting of two insulated coils of copper wire wound around a laminated soft iron core. The coils of copper wire (known as windings) are the primary winding (input winding) of several hundred turns and the secondary winding (output winding) with 15,000 to 30,000 turns. The two windings have a common junction at the primary circuit terminal 1 (standard classification). The primary circuit supply terminal is 15, and the secondary winding output is terminal 4.

Output Voltage The maximum secondary-circuit output voltage in a no-load condition is derived from the ratio between the primary and secondary windings. Depending on the type of coil and primary circuit voltage, the output voltage will be between 10,000 and 30,000 volts. High output coils can be up to 60,000 volts. All of these high voltages are a safety hazard and appropriate precautions must be taken when handling ignition components.

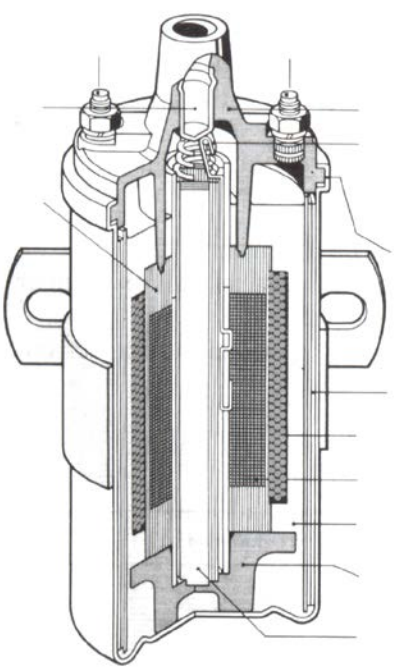

Ignition coil

High Voltage The coil high-voltage output is a pulse of high-energy electricity of over 10,000 volts. The high voltage is an induced voltage in the secondary windings. The induced voltage occurs as a result of changes in a magnetic field around the soft iron core. The magnetic field passes through the secondary windings and excites, or energizes, the electrons in the copper wire.

Magnetic Field The magnetic field is produced by passing an electrical current through the primary windings. The soft iron core is magnetized and the magnetic field remains during the time that the primary windings (primary circuit) circuit is closed. When the primary winding current is opened the magnetic field collapses abruptly and induces a voltage in the primary and secondary windings.

Sketch the magnetic field in an ignition coil

Primary Current The output voltage is determined by the values of the self-induced voltages at the time of interruption, the primary current, the winding ratio of the two windings, and by the rate of collapse of the magnetic field. The battery voltage and the electrical resistance of the entire primary circuit control the maximum primary current, which is usually between 3 to 4 Ohms. This gives a primary circuit current of 3 to 4 amps in a conventional coil ignition system.

Explain how an ignition coil produces a high voltage.

Read the previous section again and note down some key bullet points here:

-
-
-
-
-

Dwell and Timing

Low Impedance Coils Low impedance coils on modern electronic-ignition systems have a lower circuit resistance and a higher secondary current. The coil windings and coil secondary output are matched to the particular engine during the design and development process. The type and condition of the primary circuit or primary circuit switching system determine the rate of collapse of the magnetic field.

Ignition coil

Spark Energy To produce a spark across the electrodes of a spark plug, a high voltage is required. Sufficient residual energy must remain in the coil to maintain the spark duration. This is a measure of coil performance. Some energy remains after the spark cuts out and dissipates as an oscillating and reducing current in the secondary windings. The voltage at the spark plug is shown on this graph.

Coil Charge Time The time taken for the primary current flow to produce the magnetic field in the coil is measured in milliseconds. A typical coil requires about 10 milliseconds, but this is only just sufficient at high engine speeds. The current flows when the ignition is switched on and the automatic switching allows a circuit to flow to ground and back to the battery. As the engine rotates, the automatic switching turns off the current and the induced current flow.

Dwell When the current flows, the technical term for the closed circuit is “dwell angle” or “dwell period.” When no current flows, the technical term for the open circuit is “open angle” or “open period.” The most important of these is the dwell period. That’s because if this is too short, insufficient energy is available to provide effective ignition of the fuel in the combustion chamber.

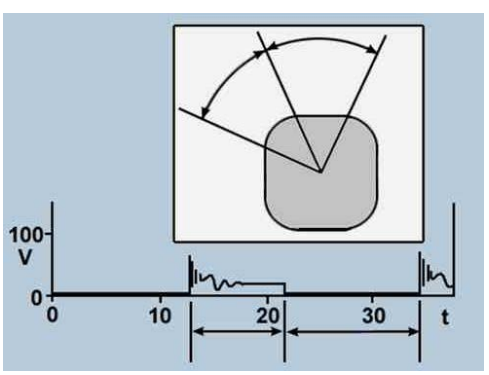

Dwell angle

Timing The ignition timing is a point when the ignition spark arcs across the electrodes of the spark plug. It is measured in degrees of crankshaft rotation before top dead center (btdc) of the piston.

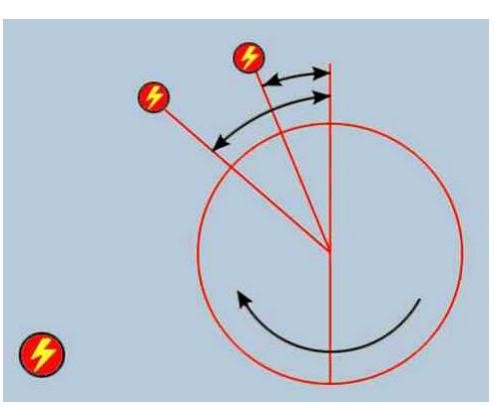

Timing changes with engine speed

Performance Ignition timing has a great effect on the performance of the engine. Only when the timing is correctly set is it possible to have: maximum engine output (power and torque), fuel efficiency, low exhaust pollution, and avoidance of engine knocking (pinking).

Combustion Pressure The ignition timing is correctly set when the combustion pressure exerted on the piston is converted into the maximum possible force for driving the vehicle. This should occur under all conditions such as engine speed, load, fuel quality, starting, idle and cruising. All energy not converted to useful work will be passed into the engine where it can cause mechanical damage and higher running temperatures.

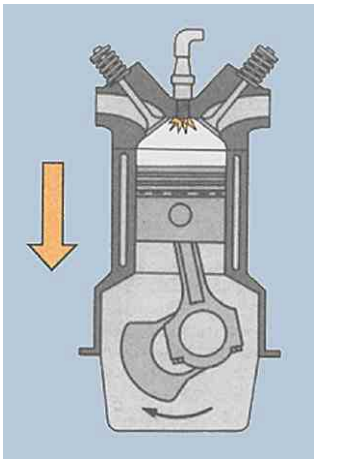

Combustion stroke

Advanced Timing Advanced ignition timing will produce combustion pressure too early. The combustion process becomes erratic and pressure waves are produced that strike the piston crown. The resulting forces have little turning effect on the crankshaft and knocking occurs on the piston, connecting rod, crankshaft and bearings.

Knocking The knocking is heard as a "pinging" or "pinking" sound. This can cause serious engine damage, things such as burnt piston crowns, spark plug insulation fracture, and thinning of the crankshaft shell bearings as though they had been repeatedly struck with a hammer. Some of the energy is used to raise the engine temperature and can cause overheating.

Damaged piston

Retarded Ignition Retarded ignition timing produces a low combustion pressure and reduced engine output. The combustion process slows, and less energy is converted to useful work, with the remainder heating the cylinder walls at a greater rate than normal. Thus, the engine temperature increases.

Explain the importance of ignition timing on the combustion process.

Explain what is meant by dwell angle, dwell percentage and dwell time.

Read the previous section again and note down some key bullet points here:

-
-
-
-
-

Electronic Systems

Transistor Assisted Contacts Development of the contact-breaker type distributor resulted in the fitting of a transistor switching circuit for the coil primary. These used a very low current across the contact breaker to trigger the transistors for switching the primary circuit. This reduced pitting on the points, extended their life and maintained the ignition performance for a longer period. Many of these early transistor units were sold in the accessory market; few were fitted as original equipment.

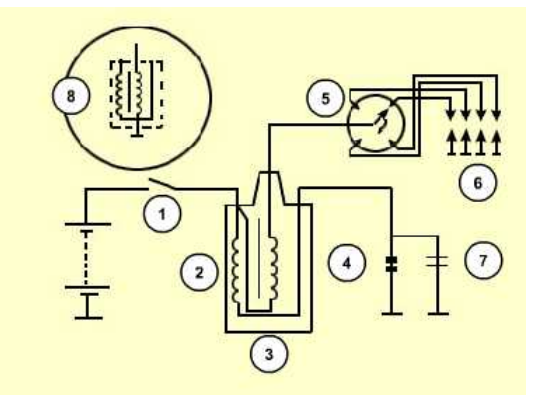

Early transistor system

Electronic Ignition Inductive Pulse Generators This diagram shows an electronic distributor with an inductive-pulse generator and electronic ignition module for control of the primary circuit switching. Mechanical and vacuum control of ignition advance and retard is used on this distributor. These types of distributors were the first electronic distributors in popular use. They have no mechanical switching components in direct contact and therefore, no parts that are liable to wear.

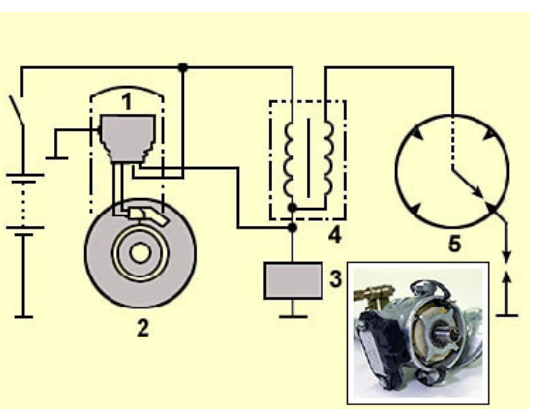

Integral amplifier

Constant Dwell Electronic Ignition With the developments in microelectronics it became possible to produce small components that held complex electrical circuitry. The first types had a constant dwell period similar to contact-breaker distributors and used a pulse generator, usually of an inductive type, to signal a transistor switching unit called an “amplifier” or “trigger module.” They continued to use a ballast resistor for improved starting performance and high resistance (1.5 to 2 Ohms) coils.

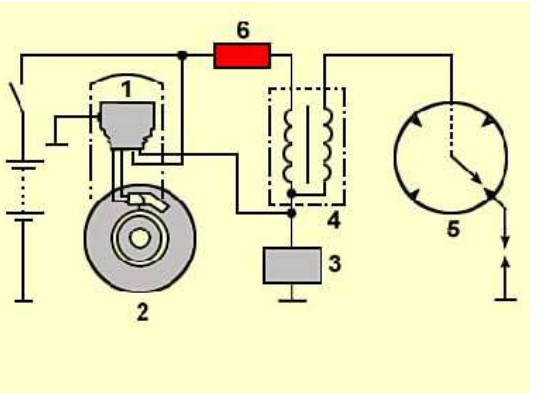

Ballasted electronic ignition

Constant Energy Electronic Ignition Further developments in electronic circuitry led to the constant-energy types that have a variable dwell period. These circuits are able to operate on low electrical currents and to convert and shape the electrical pulses to maximize the coil primary circuit control and, therefore, coil performance. The use of a variable dwell circuit makes it possible to use low resistance (2 to 3 Ohms) coils, which give up to twice the output current of the earlier high-resistance types. A ballast resistor is not needed on these circuits because they produce a good quality spark under all conditions. These systems use coils that are not interchangeable with any of the earlier types of ignition coils.

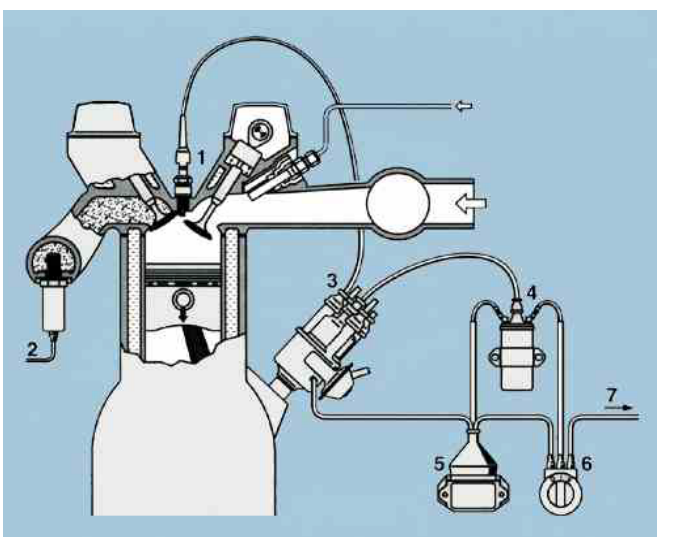

Breakerless system[3]

Pulse Generators The main components of the constant energy ignition system are the pulse generator and ignition module. Three types of pulse generator are used. The two inductive types are the "inductive coil and permanent magnet” and the “pick-up limb,” which has the inductive coil and magnet in one unit. The other main type is the “Hall-effect trigger.” Another rarely used type is an optical unit with an infrared light source, a photosensitive cell, and a segmented disc or chopper in between.

Inductive

Hall effect

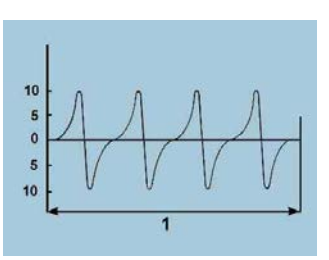

Inductive signal

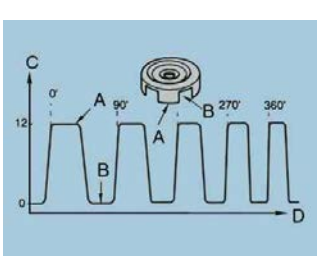

Hall effect signal

Ignition Module All of these units send signal pulses to the ignition module in time with the rotation and position of the engine. These signals trigger the primary circuit switching and therefore the coil secondary-circuit output pulses to the spark plugs.

Amplifier module

Inductive Pulse Generator The inductive coil and permanent magnet type consists of a rotating part called the rotor, trigger wheel, pulse wheel or reluctor, and a stator consisting of the inductive coil and permanent magnet. The rotor is fitted on the distributor spindle where the cam for the contact breaker was originally fitted. The stator is an inductive coil of insulated copper wire wound around a permanent magnet and is attached to the distributor base plate where the contact breaker was originally fitted. The rotor has a set of teeth corresponding to the number of cylinders on the engine. The stator is similarly fitted with teeth.

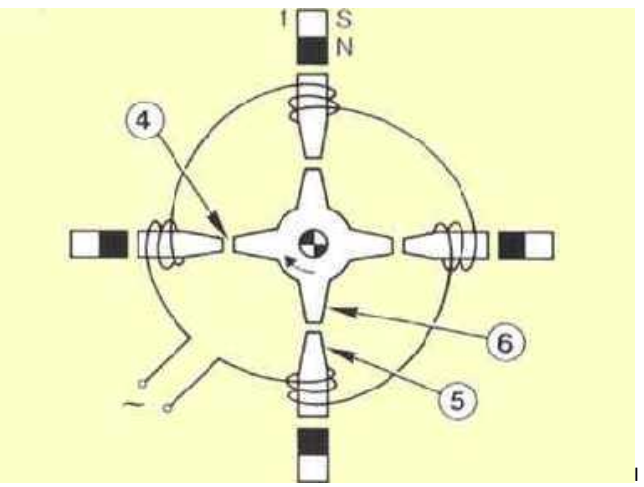

nductive type generator

Change in Magnetic Flux As the rotor rotates, the teeth on the rotor and the stator come together and separate. This changes the air gap between them and causes a change in the magnetic flux (field) around the magnet.

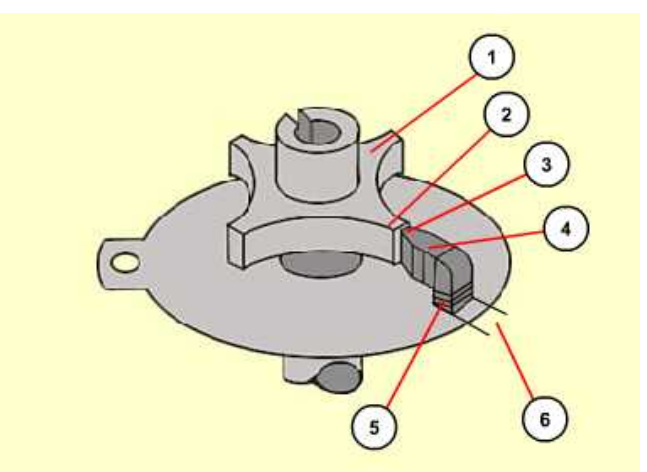

Rotor changes the flux

AC Output Signal This changing magnetic flux induces an AC (alternating current) voltage in the inductive coil. As the teeth approach, the voltage increases to a maximum just before the teeth align. As the teeth move away, the voltage changes its direction and reduces. These changes in voltage direction create an alternating electrical wave pattern that is suitable for 'contactless' ignition control.

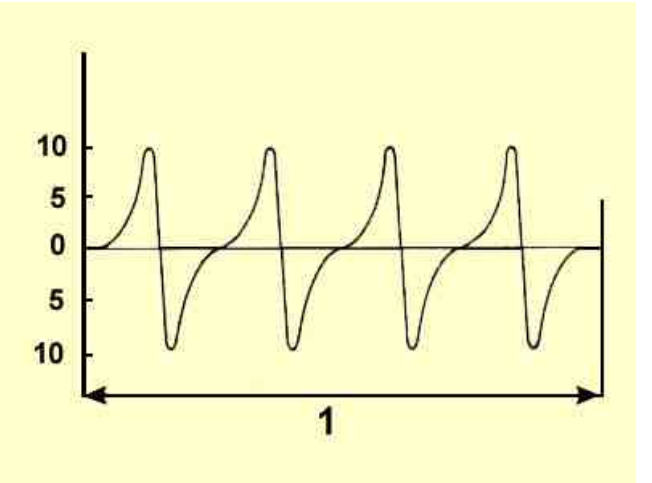

Sensor output

Hall Effect The Hall effect trigger uses a natural electrical phenomenon discovered by Edward Hall in 1879. He found that an electrical current flows across a conductor when there is an electrical current flowing along it and it is in a magnetic field. A suitable conductor for sensor use was found during the developments in semiconductor materials and microelectronics.

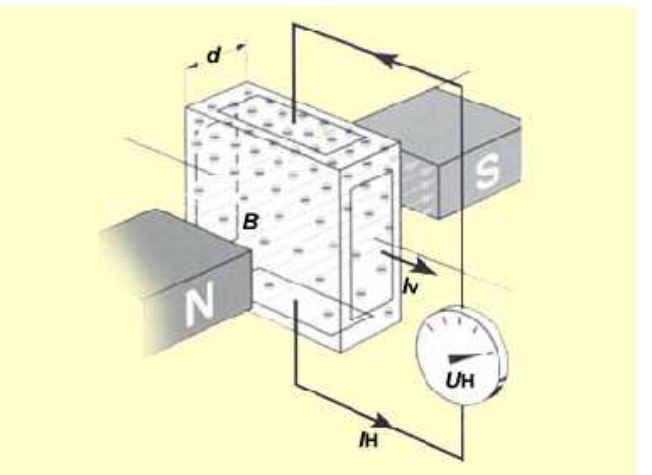

Hall effect principle

Hall Vane Rotation Rotation of the shutter exposes a gap so that a magnetic field is applied to the conductor and a trigger signal voltage is generated. Then a vane screens the conductor so that the signal voltage is cut off. Continual rotation of the shutter sends signal pulses to the ignition module in time with the engine position and speed.

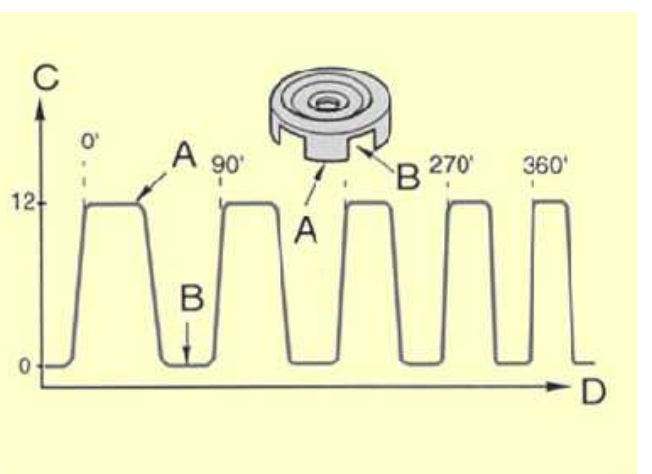

Screening and opening of gap

Hall IC The Hall conductor or layer is a small integrated circuit (Hall IC), which amplifies the small Hall-effect voltage to a suitable signal value. There are two constant electrical supply terminals and two Hall voltage terminals, although the Hall sensor or switch is fitted with three terminals, as the ground terminal is common to both circuits.

Hall supply and output connections

Describe the operation of a Hall sensor AND an inductive sensor.

Read the previous section again and note down some key bullet points here:

-
-
-
-
-

Ignition Module and ECU

Ignition Module Operation The signal voltage from the Hall effect trigger is passed to the ignition module for primary circuit switching and ignition timing. Depending on the type of ignition module, the dwell angle is 'actual' or produced as a calculation from the engine speed to give a dwell period.

Ignition module

Printed Circuit The ignition module is a printed circuit with electronic components mounted on a heat dissipation plate and encased in a protective compound. These units cannot be repaired, and it is never necessary to cut into one to attempt a repair. Some electronic units are filled with harmful chemical compounds as a protective medium. Therefore, never to attempt to open any sealed electrical or electronic unit.

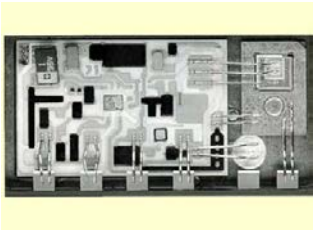

Module internal construction[3]

Circuit Sections The basic ignition module consists of a number of sections. Developments to the basic circuits have been made to provide current overload and further improvements in performance. The main sections of the basic ignition module are the voltage stabilizer, the pulse shaper, the dwell angle control, the driver, and Darlington circuit transistors that provide the primary current switching.

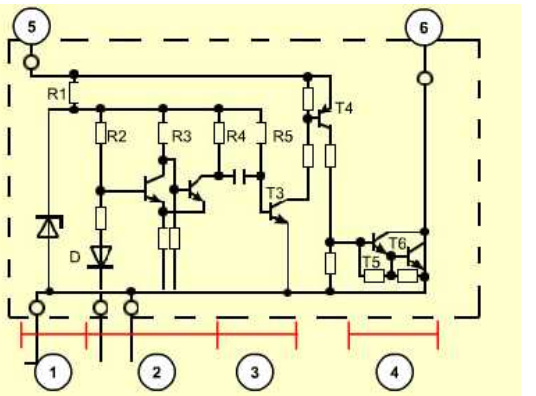

Ignition module circuit[3]

Darlington Stage Looking backward through these stages, the primary circuit switch is made from a pair of transistors called a Darlington pair or Darlington circuit. The transistors are NPN and connected so that they have common base, emitter, and collector terminals. They operate together as a power transistor with the ability to switch a high current, up to 9 amps, and the strength to handle the induced voltages in the ignition coil. A zener diode and capacitor are used to protect the Darlington circuit.

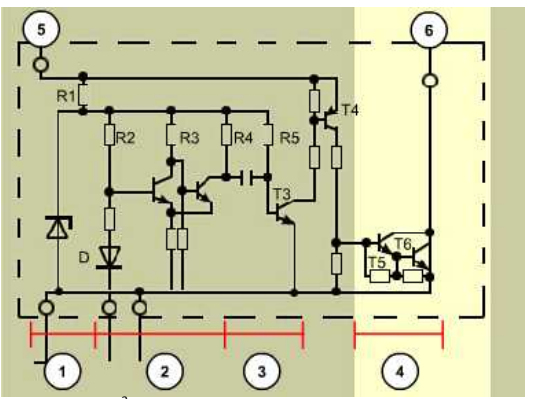

Output circuit[3]

Driver Stage The driver stage or preamplifier switches the Darlington circuit. This circuit consists of a transistor and resistors that amplify the dwell control stage voltages to a suitable level for the Darlington output stage.

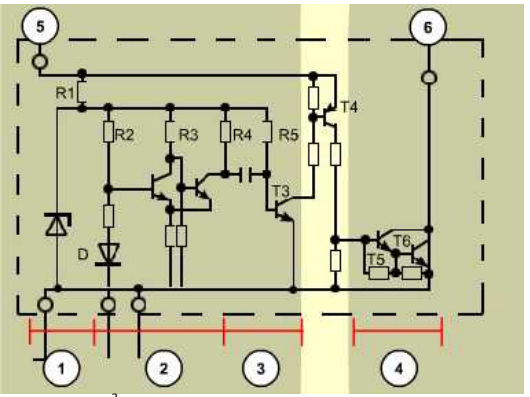

Driver circuit[3]

Dwell Stage The dwell control stage regulates the primary circuit switching for the dwell (switch-through time) and open (blocking time) periods. The dwell control uses transistors for switching and resistors and a capacitor to provide a time base for the dwell period. There are two transistors that are operated alternately to switch the primary circuit on and off.

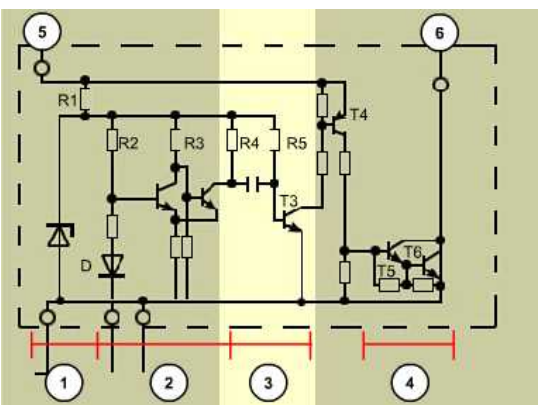

Dwell control[3]

Pulse Shaping The pulse shaper is an electronic circuit that shapes the AC voltage from the pulse generator into the square wave pattern needed for switching the primary circuit. The pulse shaper is an electronic threshold switch called a Schmitt trigger. It consists of two transistors and resistors to give electrical pathways that are dependent on the AC voltage values of the input signal from the pulse generator.

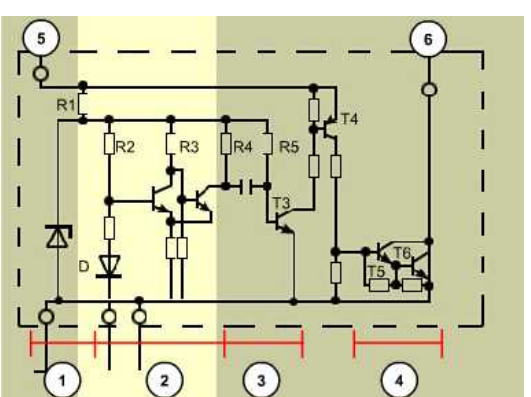

Schmitt trigger[3]

Primary Current Cut-Off Because the initial state of this circuit is with a zero output voltage, the ignition coil is not energized until the engine is rotating. The primary circuit is switched on by the first signal from the pulse generator with sufficient voltage to trigger the circuit.

Ignition module[3]

Module or Amplifier Circuit This diagram shows the complete basic ignition-module circuit with the switching on and off functions at each stage in the control of the ignition-coil primary current. A circuit similar to this is used on all electronic ignition systems for primary circuit control.

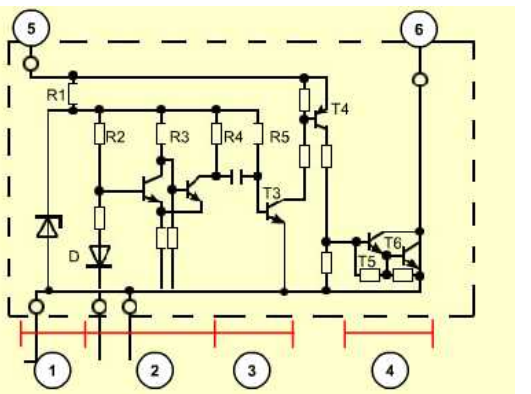

Complete circuit[3]

Distribution This diagram shows a distributor that has no primary circuit function, although some electronic systems use the distributor for crankshaft speed and position sensing. Primary circuit control uses an integrated ignition module and microprocessor, which has a stored ignition map and sensors for data input.

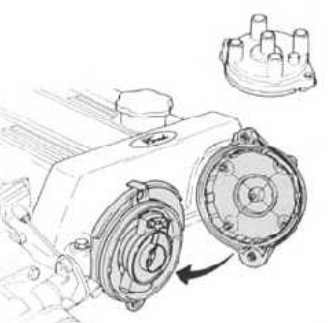

HT distributor[1]

Electronic Spark Advance The data from the sensors is compared in the electronic control unit (ECU) with the stored ignition map in order to control all primary circuit functions, including advance and retard of ignition timing. The ignition map is calculated from experimental running of the engine during the design stage and programmed into the ECU.

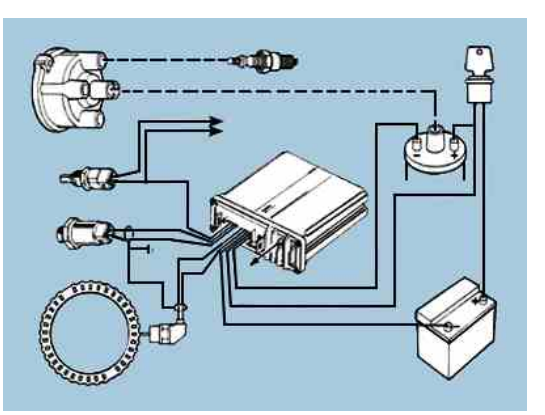

Programmed ignition system

Data Processing Sensors on the engine send voltage signals to the ECU that represent the speed and load conditions and the crankshaft position on some systems. From these signals the ECU compares the data with the stored map and initiates the ignition spark by switching of the control signal to the ignition module.

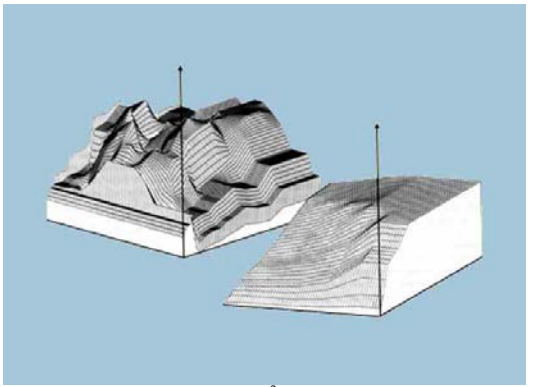

Ignition timing and dwell maps[3]

Engine Speed The sensor that provides data on engine speed is an inductive sensor fitted into a distributor or attached to the crankcase in a position where teeth on the crankshaft induce an electrical current in the windings of the sensor. Hall-effect sensors may also be used.

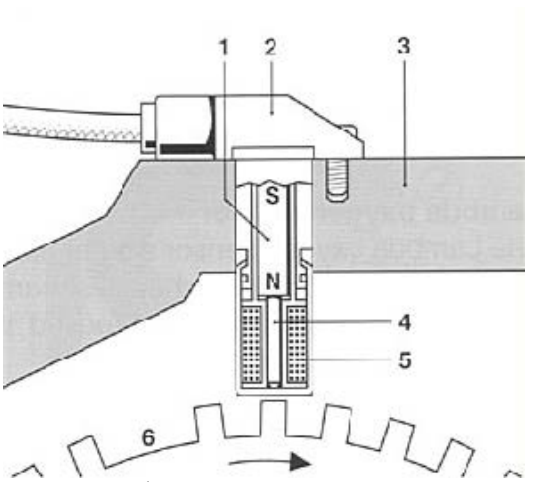

Inductive sensor[1]

Engine Load The engine load is measured by a pressure sensor connected by a vacuum pipe to the inlet manifold. Called a manifold absolute pressure (MAP) sensor, this uses the deflection created by a pressure differential on the sensor components to vary the signal voltage to the ECU.

MAP sensor

Engine Position Where the distributor provides for secondary circuit switching only, a crankshaft position sensor is also needed. The engine speed sensor may be adapted to provide a top dead center (tdc), or specific degrees before tdc reference signal, or a separate sensor may be fitted to the engine at one end of the camshaft. This is usually an inductive sensor, and as a tooth or teeth on the camshaft pulley pass the sensor, an induced current is sent to the ECU.

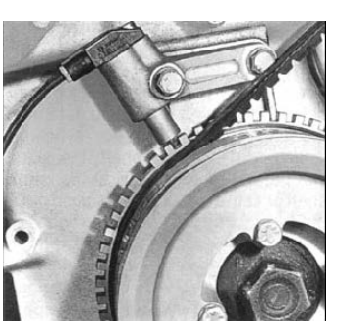

Engine position sensor

Timing Setting Many systems are fitted with an octane adjuster, which is a plug-in resistor that adapts the signal-processing voltage to suit different grades of fuel. The octane adjuster is color-coded and selected to suit the use of the system when fitted to different engines or when the recommended grade of fuel is not available. Change of the octane adjuster may be needed to prevent “pinking” when low-octane fuel is used.

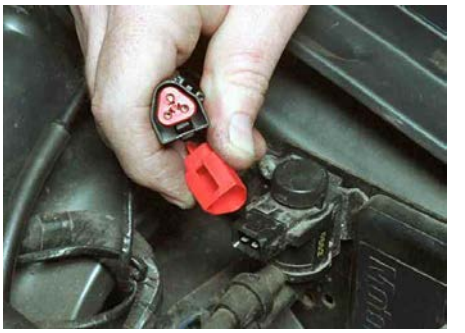

Adjustment plug

Engine Temperature Other sensors on some systems provide a signal for engine coolant temperature and air temperature, as these affect the ignition timing requirements. The timing is adapted to suit the incoming signals.

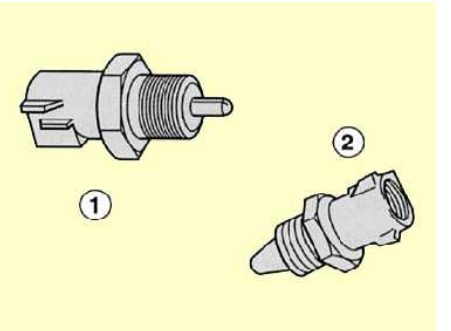

Coolant temperature sensors[1]

Make a sketch to show the ECU, inputs and outputs of a programmed ignition system.

Read the previous section again and note down some key bullet points here:

-
-
-
-
-

Ignition Systems in Use

Engine Management Modern ignition systems are usually part of the engine management, which controls fuel delivery, ignition, and other vehicle functions. These systems are under continuous development and reference to the manufacturer's workshop manual is essential when working on any vehicle. The main ignition components are the engine speed sensor, knock sensors, temperature sensor and the ignition coil. The ECU reads from the sensors, interprets and compares the data, and sends output signals to the actuators. The output component for ignition is the coil. A distributorless coil is shown here.

Introduction Electronic ignition is now fitted to almost all spark ignition vehicles. This is because the conventional mechanical system has several major disadvantages including problems with the contact breakers and their limited lifetime. Current flow in the primary circuit also had to be limited to about 4A or damage occurred to the contacts. Legislation now sets stringent emission limits, which means the ignition timing must stay in tune for a long period. Weaker mixtures also require more energy from the spark to ensure successful ignition, even at very high engine speed. Electronic system can achieve these requirements.

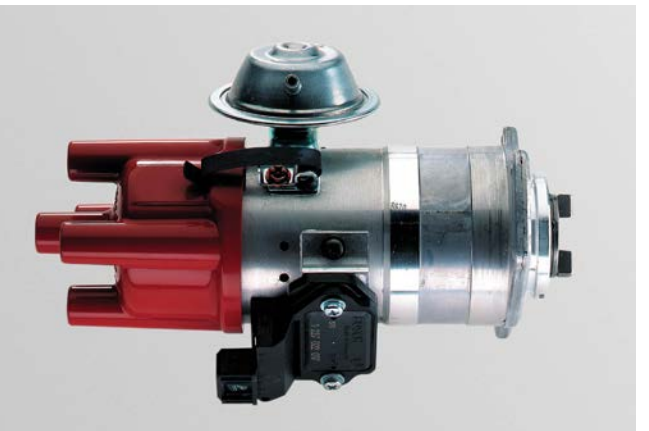

Bosch distributor with ECU fitted[4]

Power Transistor The problems just mentioned are overcome by using a power transistor to carry out the switching function and a pulse generator to provide the timing signal. Very early forms of electronic ignition used the contact breakers as the signal provider. This was a step in the right direction but did not overcome all the mechanical limitations such as contact bounce and timing slip. Most systems today are known as constant energy. This ensures high performance ignition even at high engine speed.

Bosch electronic ignition module[4]

Constant Dwell Systems The term 'dwell' when applied to ignition is a measure of the time during which the ignition coil is charging, in other words when primary current is flowing. The dwell in conventional systems was simply the time during which the contact breakers were closed. This is now often expressed as a percentage of one charge-discharge cycle. Constant dwell electronic ignition systems have now been replaced by constant energy systems.

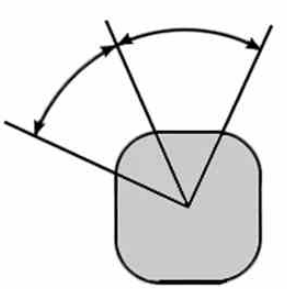

Dwell angle

Constant Energy Systems In order for a constant energy electronic ignition system to operate the dwell must increase with engine speed. This will only be of benefit however if the ignition coil can be charged up to its full capacity, in a very short time. To this end constant energy coils are very low resistance and low inductance. Typical resistance values are less than 1Ω (often 0.5Ω). Constant energy means that, within limits, the energy available to make the spark at the plug remains constant under all operating conditions.

New ignition coil

Old ignition coil

Spark Energy An energy value of about 0.3mJ is all that is required to ignite a static stoichiometric (ideal proportion) mixture. However, with lean or rich mixtures, together with high turbulence, energy values in the region of 3 to 4mJ are necessary. This has made constant energy ignition essential on all of today's vehicles so they can meet the expected emission and performance criteria. These systems, known as closed loop, use current detection to ensure full coil charge at all times.

Spark energy requirement depends on conditions at the plug[4]

High Energy Coil Due to the high energy nature of constant energy ignition coils, the coil can not be allowed to remain switched on for more than a certain time. This is not a problem when the engine is running, as the variable dwell or current limiting circuit prevents the coil over heating. Some form of protection must be provided for however, when the ignition is switched on but the engine is not running. This is known as stationary engine primary current cut off. This feature is built in to the electronic control unit.

DIS coil

Hall Effect Pulse Generator The Hall Effect distributor is very popular with many manufacturers. As the central shaft of the distributor rotates, a chopper plate attached under the rotor arm alternately covers and uncovers the Hall chip. The number of vanes corresponds with the number of cylinders. The vanes cause the Hall chip to be alternately in and out of a magnetic field. The result of this is that the device will produce a square wave output, which can then be used to switch electronic circuits. The three terminals on the distributor are marked '+ 0 -', the terminals + and -, are for a battery voltage supply and terminal '0' is the output signal (usually about 7 or 8 volts). Operation of a Hall Effect pulse generator can be tested with a DC voltmeter, a scope or a logic probe. Note that tests must NOT be carried out using an ohmmeter as the voltage from the meter can damage the Hall chip.

Distributor with a Hall Effect sensor

Inductive Pulse Generator Inductive pulse generators use the basic principle of induction to produce a signal similar to a sine wave. Many forms exist but all are based around a coil of wire and a permanent magnet. The example distributor shown here has the coil of wire wound on the pick-up. As the shaft rotates the magnetic flux varies due to the peaks on the reluctor. The number of peaks or teeth on the reluctor corresponds to the number of engine cylinders. The gap between the reluctor and pick-up can be important and manufacturers have recommended settings.

Inductive distributor

Capacitor Discharge Ignition (CDI) The CDI works by first stepping up the battery voltage to about 400V (DC), using an oscillator and a transformer, followed by a rectifier. The high voltage is then used to charge a capacitor. At the point of ignition the capacitor is discharged through the primary winding of a coil. This rapid discharge through the coil primary produces a very high voltage output from the secondary winding. This voltage has a very fast rise time compared to a more conventional system. Typically the rise time for CDI is 3 to 10 kV/µS as compared to the pure inductive system which is 300 to 500V/µS. This very fast rise time and high voltage, will ensure that even a carbon or oil fouled plug will spark. The disadvantage however is that the spark duration is short, which can cause problems particularly during starting. This is often overcome by providing the facility for multi-sparking.

Some direct ignition systems use CDi

Programmed Ignition Overview

Programmed ignition is the term used by some manufacturers for a digitally controlled ignition system; others call it electronic spark advance (ESA). Constant energy electronic ignition was a major step forwards and is still used on countless applications. However, its limitations lie in still having to rely upon mechanical components for speed and load advance characteristics. In many cases these did not match ideally the requirements of the engine. With a digital system, information about the operating requirements of a particular engine is programmed in to memory inside the electronic control unit. The data, which is stored in read only memory (ROM), is obtained from testing on an engine dynamometer and then under various operating conditions.

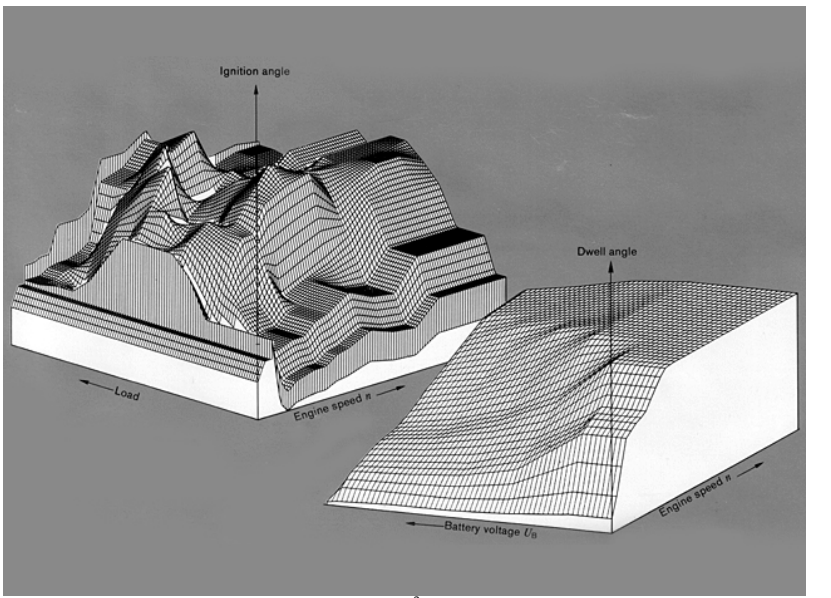

Electronic spark advance system memory maps[3]

Advantages Programmed ignition has several advantages:

The ignition timing can be accurately matched to the individual application under a range of operating conditions

Other control inputs can be utilized such as engine knock signals, coolant temperature and ambient air temperature

Starting is improved, fuel consumption and emission are reduced and idle control is better

The number of wearing components in the ignition system is considerably reduced

Ignition and fueling[4]

Programmed ignition or electronic spark advance, can be a separate system or, increasingly, can be included as part of the fuel control system. In order for the ECU to calculate suitable timing and dwell outputs, certain input information is required. Because this is usually the same info used for fueling requirements, it makes sense to combine the systems.

Engine Speed and Position Sensing A crankshaft sensor is used to get information on engine speed. The device consists of a permanent magnet, a winding and a soft iron core. It is mounted in proximity to a reluctor disc or wheel. The reluctor has a number of teeth spaced at set intervals around the periphery. It usually has two teeth missing 180^0 apart, at a known position BTDC. Most manufacturers use a similar technique. As a tooth from the reluctor passes the core of the sensor the reluctance of the magnetic circuit is changed. This induces a voltage in the winding, the frequency of the waveform is proportional to the engine speed. The missing teeth cause a 'missed' output wave to determine engine position.

Engine speed sensor

Engine Load Sensing Engine load (how hard the engine is working) is proportional to manifold pressure. High load conditions produce high pressure and low load conditions such as cruise, produce lower pressure. Load sensors are therefore pressure transducers – known as manifold absolute pressure (MAP) sensors. They are either mounted in the ECU or as a separate unit and are connected to the inlet manifold with a pipe. The pipe often incorporates a restriction to damp out fluctuations and a vapor trap to prevent gasoline fumes reaching the sensor.

MAP sensor

Engine Temperature Coolant temperature measurement is carried out by a simple thermistor – in many cases the same sensor may be used for the operation of the temperature gauge and to provide information to the fuel control system. A separate memory map is used to correct the basic timing settings. Timing may be retarded when the engine is cold, for example, to assist in more rapid warm up.

Temperature sensor

Detonation Combustion knock can cause serious damage to an engine if sustained for long periods. This knock or detonation is caused by over advanced ignition timing. Conversely, an engine will run at its most efficient, when the timing is advanced as close to the limit as possible. To achieve this, the data stored in the basic timing map will be as close to the knock limit of the engine as possible. A knock sensor therefore provides a margin for error. The sensor itself is an accelerometer often of the piezoelectric type. It is fitted in the engine block between cylinders two and three on in-line four engines. Vee engines require two sensors, one on each side.

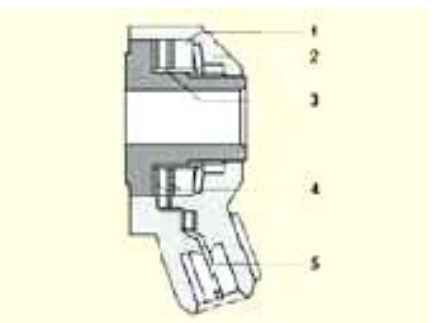

Sensor construction[3]

Knock sensors[4]

Combustion Knock The ECU responds to signals from the knock sensor in the engines knock window for each cylinder, this is usually just a few degrees each side of TDC. This prevents clatter from the valve mechanism being interpreted as knock. The signal from the sensor is also filtered in the ECU to remove unwanted noise. If detonation is detected the ignition timing is retarded on the next ignition pulse for that cylinder, in steps, until knock is no longer detected. The steps vary between manufacturers but about 2° is typical. The timing is then advanced slowly in steps of say 1° over a number of engine revolutions, until the advance required by memory is restored. This fine control allows the engine to be run very close to the knock limit without risk of engine damage.

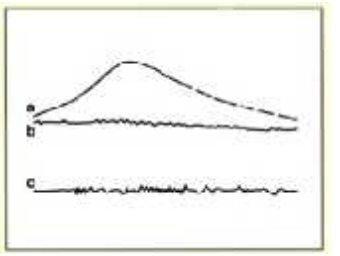

No knock

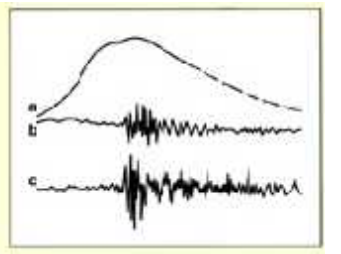

Knocking signal

Battery Voltage Correction to dwell settings is required if the battery voltage changes. This information is stored in the form of a dwell correction map. A lower battery voltage will require a slightly longer dwell and a higher voltage a slightly shorter dwell.

Battery[4]

Electronic Control Unit As the sophistication of systems has increased the information held in the memory chips of the ECU has also increased. Earlier versions of programmed ignition systems achieved accuracy in ignition timing of $\pm 2^{o}$ whereas a conventional distributor is $\pm 8^{o}$. The information, which is derived from dynamometer tests and running tests in the vehicle, is stored in ROM. The basic timing map consists of the correct ignition advance for a range of engine speed and load conditions. A separate map is used which hold speed and temperature data. This is used to add corrections for engine coolant temperature to the basic timing settings. This improves drivability and can be used to decrease the warm up time of the engine. The ECU will also make corrections to the dwell angle, as a function of engine speed and battery voltage, to ensure constant energy output.

ECU[4]

Ignition Output The output of a system such as programmed ignition is very simple. The main switching component, in common with all electronic ignition systems, is a heavy-duty transistor which forms part of, or is driven by, a Darlington pair. This allows the high primary current to be controlled. The switch off point of the coil will control ignition timing and the relative switch on point will control the dwell period.

Power transistor

HT Distribution The high-tension distribution is similar to a conventional system. The rotor arm however, is usually mounted on the end of the camshaft with the distributor cap positioned over the top. The rotor arm is often reinforced with a metal insert to relieve fixing stresses.

Conventional distributor cap

Distributorless Ignition (DIS)
Distributorless ignition has all the features of programmed ignition systems but by using a special type of ignition coil, operates the spark plugs without the need for a distributor. The basic principle is that of the 'lost spark'. On a four cylinder engine, the distribution of the spark is achieved by using two double-ended coils, which are fired alternately by the ECU. The timing is determined from a crankshaft speed and position sensor as well as load and other corrections. When one of the coils is fired a spark is delivered to two engine cylinders, either 1 and 4, or 2 and 3. The spark delivered to the cylinder on the compression stroke will ignite the mixture as normal. The spark produced in the other cylinder will have no effect, as this cylinder will be just completing its exhaust stroke.

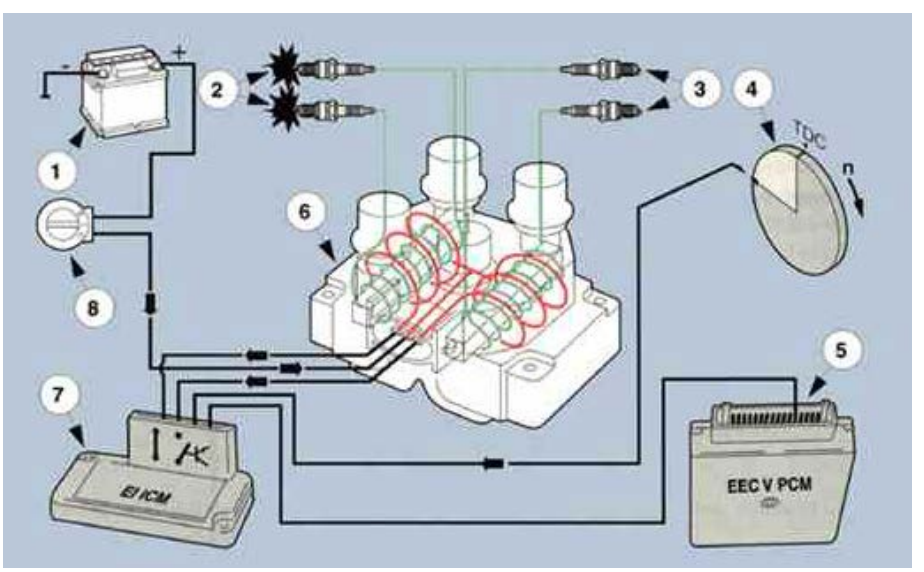

Distributorless ignition system

Spark Voltages Because of the low compression and the exhaust gasses in the 'lost spark' cylinder, the voltage used for the spark to jump the gap is only about 3kV. This is similar to the conventional rotor arm to cap voltage. The spark produced in the compression cylinder is therefore not affected. An interesting point here is that the spark on one of the cylinders will jump from the earth electrode to the spark plug center. A few years ago this would not have been acceptable as the spark quality would not have been as good as when it jumps from the center electrode. However, the energy available from constant energy systems will produce a spark of suitable quality in either direction.

DIS coil in position

System Components The DIS system consists of three main components, the electronic module, a crankshaft position sensor and the DIS coil. In many systems a manifold absolute pressure sensor is integrated in the module. The module functions in much the same way as has been described previously for the electronic spark advance system. The low tension winding of the coil is supplied with battery voltage to a center terminal. The appropriate half of the winding is then switched to earth in the module. The high-tension windings are separate and are specific to cylinders 1 and 4, or 2 and 3 (on a 4-cylinder engine).

C
rank sensor

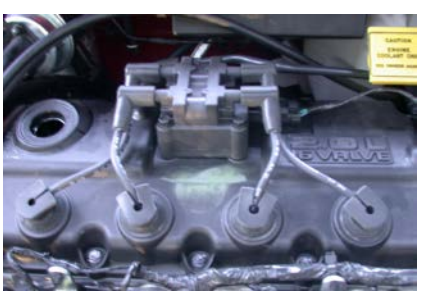
DIS coil and plug wires

E
CU[4]

Direct Ignition Direct ignition utilizes one ignition coil for each cylinder. These coils are mounted directly on the spark plugs. The use of an individual coil for each plug ensures that the charge time for the low inductance primary winding is very fast. This ensures that a very high voltage, high-energy spark is produced. This voltage, which can be in excess of 40kV, provides efficient ignition of the combustion process even under cold starting conditions and with weak mixtures.

Direct ignition coils in position

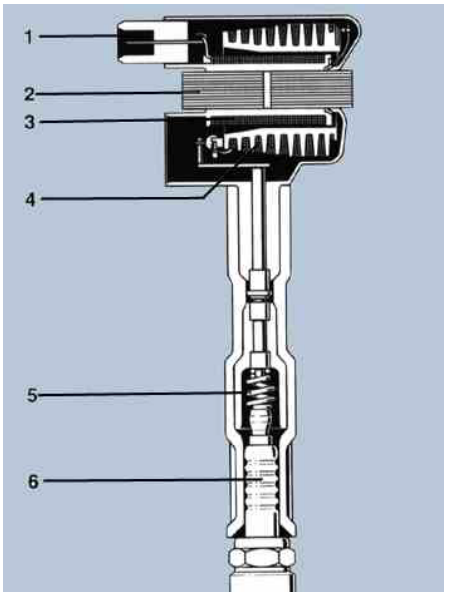

Cross section of a direct ignition coil[3]

Control of Ignition Ignition timing and dwell are controlled in a manner similar to the previously described programmed system. The one important addition to this, on some systems, is a camshaft sensor to provide information about which cylinder is on the compression stroke. A method which does not require a sensor to determine which cylinder is on compression (engine position is known from a crank sensor) determines the information by initially firing all of the coils. The voltage across the plugs allows measurement of the current for each spark and will indicate which cylinder is on its combustion stroke. This works because a burning mixture has a lower resistance. The cylinder with the highest current at this point will be the cylinder on the combustion stroke.

Combustion taking place[2]

Multi-sparking A further feature of some systems is that when the engine has been cranked over for an excessive time, making flooding likely, the plugs are all fired with 'multisparks'. This occurs for a period after the ignition is left in the on position for five seconds. This will burn away any excess fuel. During difficult starting conditions, multi-sparking is also used by some systems during 70° of crank rotation before TDC. This assists with starting and then, once the engine is running, the timing returns to its normal calculated position.

Limp Home Modern ignition systems that are part of an engine management system usually have a limp-home facility that allows the engine to continue to operate when defects are detected by the ECU. Basic settings are substituted and a warning light is illuminated to alert the driver.

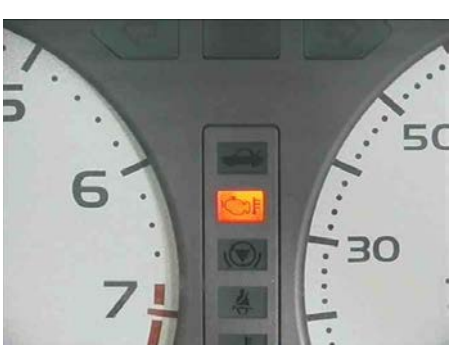
Engine management warning light

On-Board Diagnostics Self-test and on-board diagnostic (OBD) links are provided for diagnostic tests to be carried out. A scanner or code reader is needed for this task.

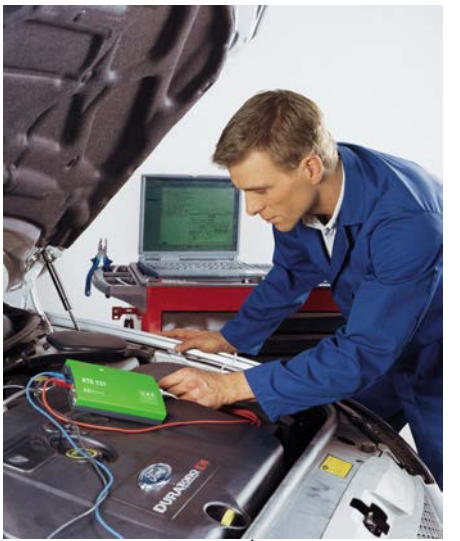

Bosch diagnostic equipment[4]

Summary Ignition systems continue to develop and will continue to improve. Remember, the simple purpose of an ignition system is to light the fuel air mixture every time at the right time. And, no matter how complex the electronics may seem, the high voltage is produced by switching a coil on and off.

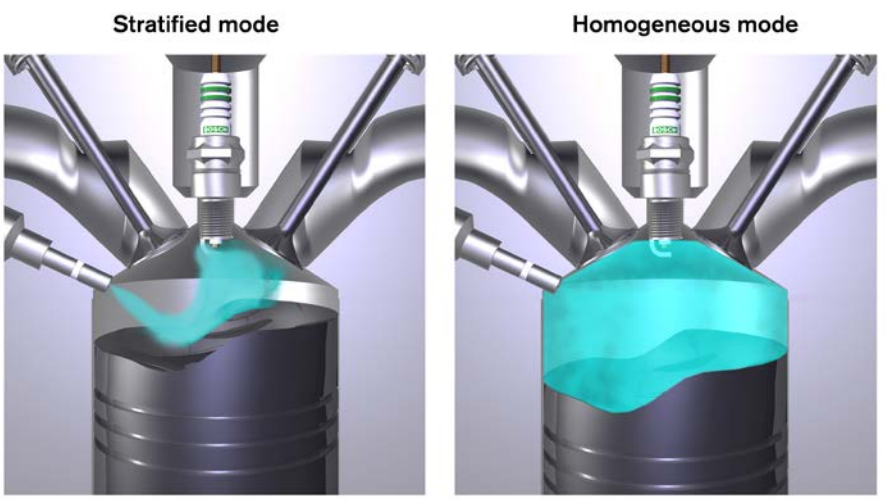

Operating mode of spark ignition engine with direct injection[4]

Explain the advantages of combining the ignition and fuel control systems.

State why digital systems are more accurate that those with mechanical components.

Read the previous section again and note down some key bullet points here:

-
-
-
-
-

Spark Plugs and Secondary Circuit

Spark Plugs The spark plugs are fitted into the combustion chambers at the top of each cylinder. The electrical current in the secondary circuit is sufficient to make the air gap between the electrodes conductive and produce a spark. A higher voltage is needed to initiate the spark than is needed to maintain it. The spark has sufficient heat and energy to ignite the fuel in the combustion chamber.

Plugs in cylinder head

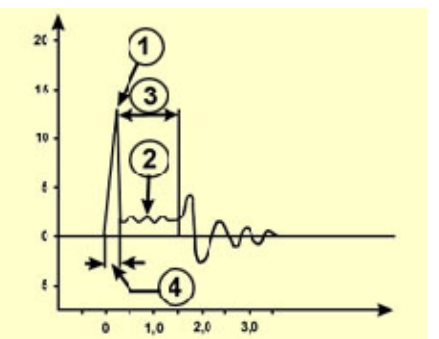

HT waveform[3]

Combustion The conditions in the combustion chamber make the production of a spark difficult. There is a high pressure in the air charge following compression, and the fuel particles make that air charge damp. Insulation of the secondary circuit components must be able to prevent any premature grounding of the high voltage. Damp proofing is also required to prevent an alternative conductive pathway from being formed.

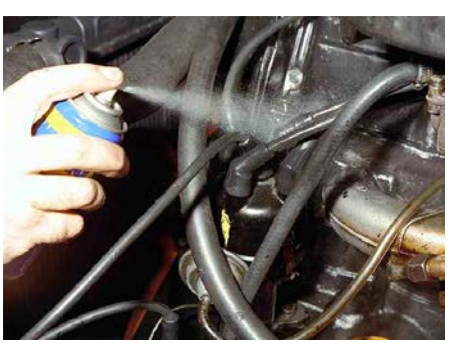
Damp proofing

Electrodes Spark plugs consist of a center electrode in a ceramic insulator fitted inside a steel body and a ground electrode or electrodes welded to the body of the plug. The spark plug body is threaded to fit the cylinder head where it protrudes into the combustion chamber. A gas-tight seal is made between the insulator and body of the plug with sealing rings and crimping of the body to the insulator. Gas sealing at the cylinder head is made with a compressible gasket or taper seat.

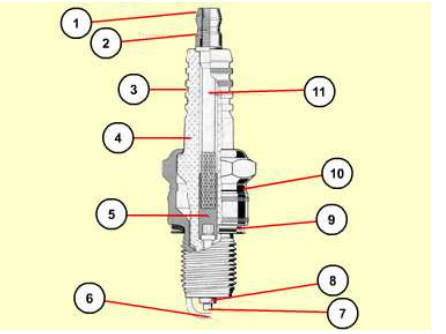

Spark plug in cross section

Matching Spark Plugs Spark plugs are matched to the engine to suit the cylinder head constructional details and for normal driving conditions. They are selected from a range of types. The features of spark plugs are reach and thread diameter, gas sealing method, heat range, and other design features. The gap between the electrodes is specified by the plug and engine manufacturer to match the engine for best possible performance.

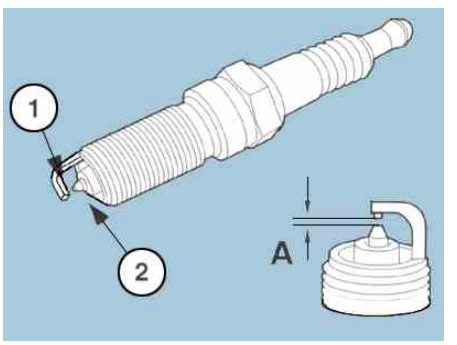

Spark plug gap

Plug features

Plug Reach and Diameter The reach or length of thread and the thread diameter refer to the threaded section of the plug and are used to match the plug to the thread dimensions for fitting into the cylinder head.

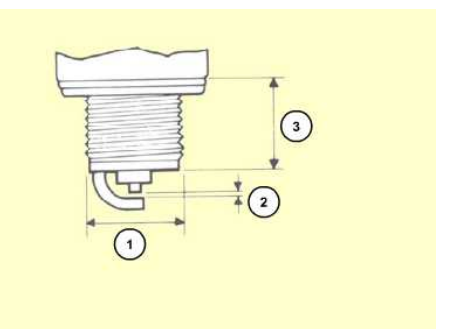

Plug reach and diameter

Sealing Spark Plugs Two common types of gas sealing are used: a compressible copper gasket and a taper seat. These are not interchangeable. The tightening torque of the spark plug into the cylinder head is different for each type of plug. Always refer to torque data and tighten appropriately because correct fitting affects the heat dissipation and, therefore, the performance and life of the plug.

Washer sealing

Taper seat sealing

Heat Range The heat range of spark plugs is determined by the ability of the plug to maintain a constant temperature at the plug tip in the combustion chamber. The normal temperature range at the plug tip should be at least 500°C and about 800°C for optimum performance. The lower temperature is sufficient to give a self-cleaning action at the electrodes and provide extended life.

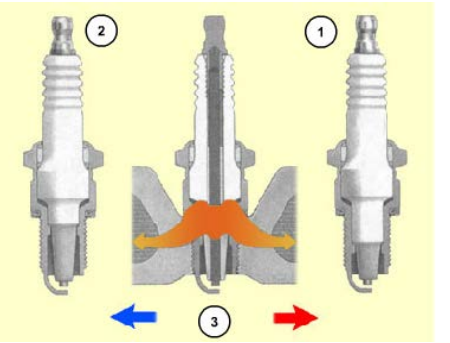

Heat loss paths

Self-Cleaning The self-cleaning action prevents the build-up of soot, oil, and carbon deposits, which are burnt off above 500°C. Carbon deposits on the plug tip and insulator provide grounding paths for the secondary circuit current and cause misfiring of the engine.

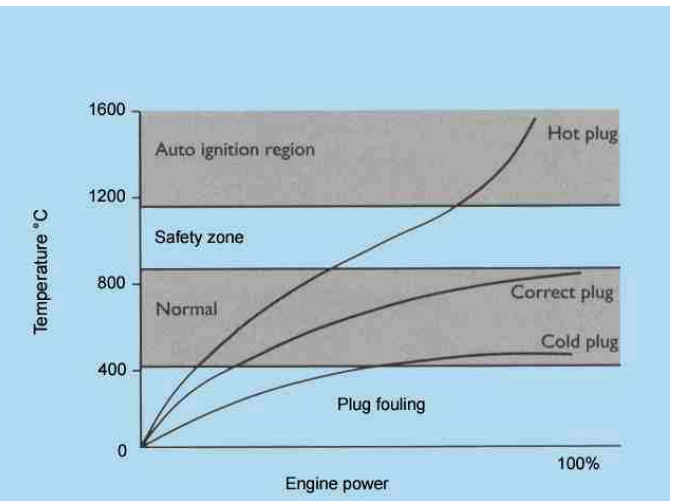

Plug temperature

Pre-Ignition Exceeding the upper limit would make the spark tip glow and ignite the mixture before a spark is initiated. The result of any pre-ignition is engine knocking (which is heard as a “pinking” sound), poor engine performance and fuel economy, and the probability of severe engine damage.

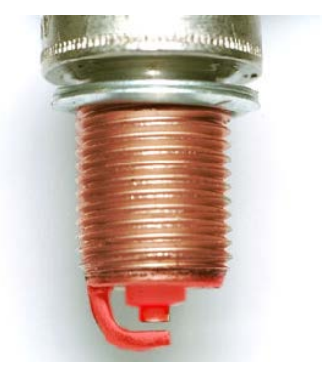
Over heated plug!

Heat Paths The length of the heat dissipation path of the central insulator provides the heat range of the plug. A hot type plug has a low thermal value and has a limited heat transfer path. A cold plug has a high thermal value and transfers heat away more easily. Only in exceptional circumstances is it necessary to use plugs of a different heat range than the ones specified for a vehicle.

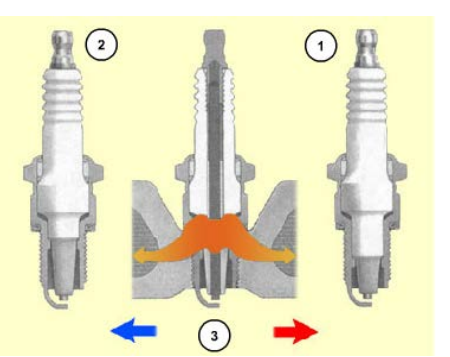

Thermal paths

Plug Variations The other design features of plugs are the references to changes in the basic plug type. One development that has now become fairly standard is the extended tip – now considered to be the standard electrode position. The old design does not have the center and ground electrodes extended from the plug tip.

Plug features

Plug Tip Designs There is a large range of plug tip designs for the wide range of engine applications. Many of these are for non-vehicle uses such as lawn mowers, chain saws, and marine engines. A special range of plugs has more than the one ground electrode used on standard plugs. These are referred to by product name or as ring electrode types. The pressures and forces at the plug tip following ignition can lead to distortion of the ground electrode. To overcome this problem, reinforced ground electrodes can be used.

Old tip designs

New tip designs

Two electrode

Four electrode

Spark Plug Cores The connection from the plug terminal to the center electrode tip has been developed in a number of ways. An electrical resistive core is used to provide radio suppression. The electrodes of a standard plug are made from a nickel alloy. Special-purpose and long-life plugs use other alloying elements such as chrome, copper, silver, and platinum. These materials may also be used to coat the tip, or, in the case of copper, be used as a core for the center electrode.

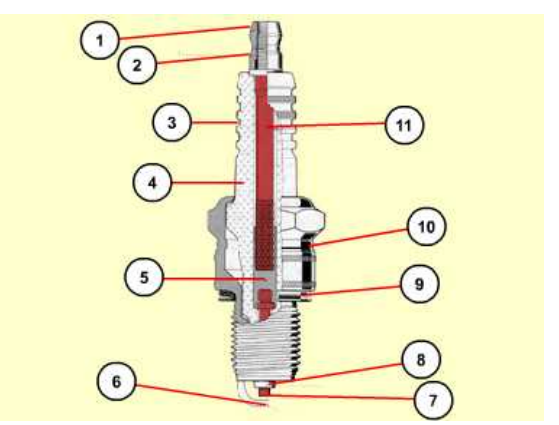

Plug core

Selection of the Correct Plug The range of design details that are included in spark plug classification and identification are code letters or numbers for thread diameter, length of thread (reach), and design features such as radio suppression, taper seat and electrode type, the heat range, and the electrode gap. Special materials used in the construction of the plug are included in the manufacturer's name for the range of plugs or by a code letter in the identification classification.

Spark plug part numbers

Secondary Circuit The secondary circuit wires are thickly insulated to ensure that the electrical current reaches the spark plugs. Some plug wires have radio suppression insulation to limit electromagnetic wave transmissions. The wires have a resistive core inside a thick outer insulation and limit and smooth the secondary current.

High tension leads

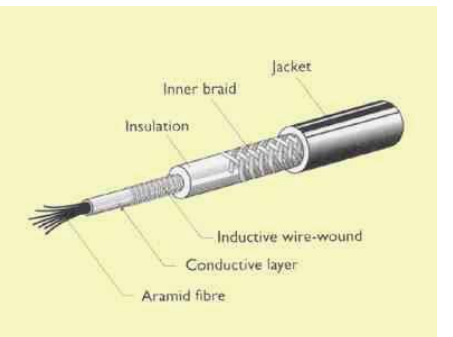

Lead details

Plug Lead Connections The connectors and terminals are also designed to provide radio suppression in some cases.

HT connections

Cap and Rotor The distributor cap and rotor are made from a hard plastic material and have electrical conductors for distribution of the high voltages of the secondary circuit from the ignition coil to the spark plugs. The distributor cap is secured to the distributor body with spring clips or screws and fitted with a lug and slot to ensure correct positioning for No. 1 cylinder and the engine firing order. The rotor sits on top of the distributor spindle and is fitted with a lug and slot.

Cap external view

Cap internal view

Summary The purpose of an ignition system is to produce a spark in the correct cylinder at the right time. All ignition systems achieve the high voltage required by switching an ignition coil on and off.

Explain why a hot plug is fitted to a cold engine and a cold plug is fitted to a hot engine.

Read the previous section again and note down some key bullet points here:

-
-
-
-
-

Fuel Introduction

Introduction The fuel-supply systems of gasoline-powered vehicles have undergone extensive development during the past 50 years. There were many developments in the traditional gasoline-supply and air-mixing methods used in carburetors. However, the introduction of mechanical and electronic gasoline-injection systems has made carburetors almost obsolete. All gasoline-powered vehicles are now equipped with fuel injection in order to meet the latest requirements for reducing harmful exhaust emissions.

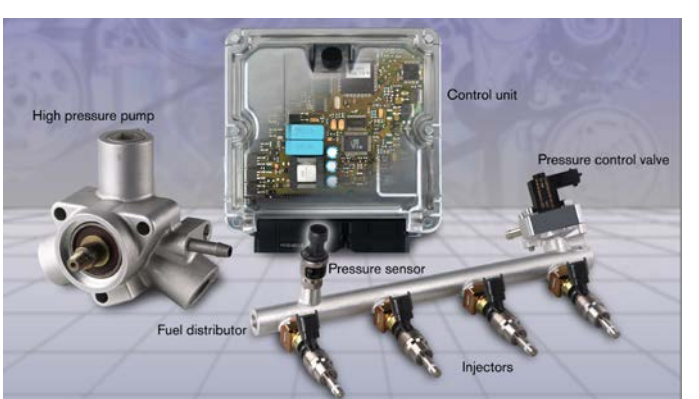

Modern fuel injection system[4]

Old carburetor

Developments Many of the developments have been introduced to provide improved engine performance along with higher power outputs and lower fuel consumption. Meeting environmental protection regulations has been equally important. Diesel fuel pumps and injectors have undergone similar developments and seen the introduction of electronically controlled fuel metering and full electronic-control systems. Because of these developments, a wide range of fuel systems exist. In this section, the main systems are explained in some detail. On the other hand, older systems (such as those with carburetors) are only examined briefly.

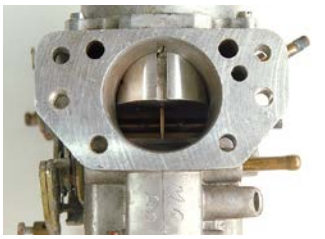
Carburetor

Fuel injection system

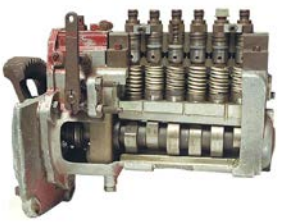
Old diesel pump

New diesel pump

Chemical Action All fuel-delivery systems have to supply a quantity of fuel that matches the amount of oxygen found in the air entering the engine. For gasoline-powered vehicles, the quantities of hydrogen and carbon in the fuel and the oxygen content of the air should be chemically correct to give a complete chemical change during combustion. The chemical change for clean combustion is $CH + O = CO_2 + H_2O$ or, carbon and hydrogen plus oxygen equals carbon dioxide and water.

Energy is created by a chemical reaction[2]

Combustion For complete and clean combustion, the ratio of air to fuel should be as close as possible to the stoichiometric value. This is where λ (lambda) equals one. This is a ratio of 14.7:1 by mass of air to fuel. In gasoline engines, the optimum for clean combustion is for these quantities to be delivered accurately to each cylinder in the engine. Refer to the Engine Mechanical Repair and the Air Supply, Exhaust and Exhaust Emission Control learning programs for additional information on exhaust gas constituents.

Ideal and incomplete combustion

Spark and Compression Ignition Gasoline is ignited in the combustion chamber by a spark arcing across the electrode gap of a spark plug. Diesel fuel ignites following injection into the high temperature air charge. The high temperature is obtained by compression of the air charge. The air charge on gasoline engines is matched to the amount of fuel delivered. On diesel engines, a full air or gas charge is required in order to raise the temperature by compression.

Compression Ignition On diesel engines, the air charge is not balanced to the fuel delivered and this gives, under most conditions, a surplus of oxygen. This surplus of oxygen can combine with chemicals in the cylinder to form harmful gases such as nitrogen oxides. However, the use of exhaust gas recirculation (EGR) can keep the surplus oxygen to a minimum. The mix of air and exhaust gas helps to reduce the production of nitrogen oxides.

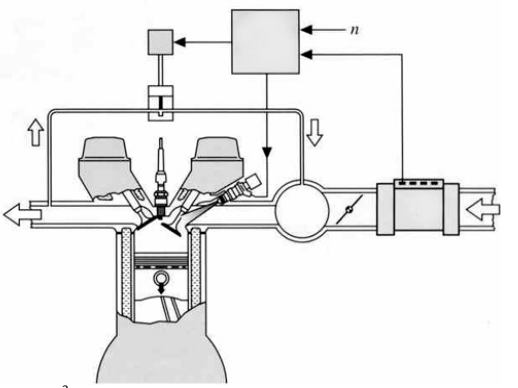

Exhaust gas recirculation[3]

Exhaust Gas The carbon dioxide and water in the exhaust are not directly harmful. Carbon dioxide is a greenhouse gas and is believed to contribute to global warming. Exhaust gases are not normally clean, as internal engine combustion is not a simple process. This makes the use of catalytic converters essential.

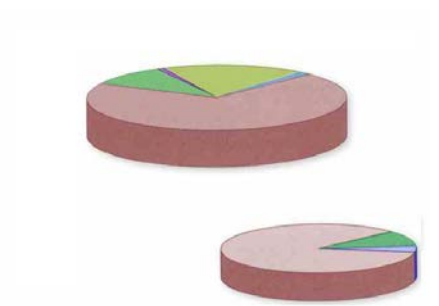

Exhaust gas constituents

Catalytic Converters Catalytic converters help to change any residual fuel, carbon monoxide, or nitrogen oxides to harmless substances. The fuel may have impurities or additives to aid combustion, which is the case with leaded fuel. There are other gases in the air that also undergo chemical reaction during the burning of the fuel in the engine. Poor distribution of the fuel in the air charge will give local variations in the combustion process and harmful exhaust-gas constituents.

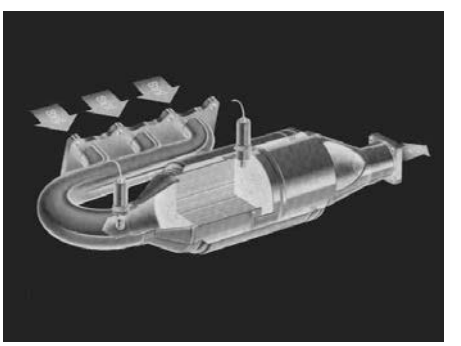

Action of catalytic converters

Fuel Additives Impurities and additives have been considerably reduced over recent years. The most significant impurity was low quantities of sulfur, which combines with atmospheric gases to form sulfuric acid. Leaded gasoline has tetraethyl lead added as an octane enhancer. This additive was used to prevent knocking by slowing the combustion process to a specific value. However, lead is damaging to human health and is being phased out of gasoline. Other chemicals that can perform the same function are used instead.

Gas station

Octane Rating The rate of gasoline combustion is a measurable value. Octane is the anti-knock rating that is used as a comparative for all gasoline fuels. The combustion characteristics of octane are given a value of 100. This value is then used to measure other gasoline fuels. The octane rating of a fuel is used to set, among other things, the engine compression ratio and ignition timing at the design stage. It is then used in service as a guide for the fuel that should be used. Typical gasoline octane ratings range from 93 and 97. The equivalent substance for diesel fuels is cetane; typical cetane ratings are 48 to 50.

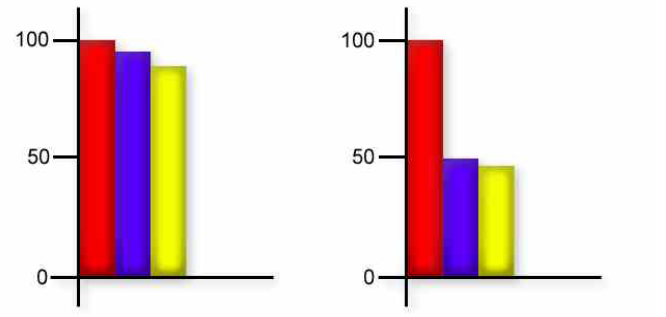

Octane and cetane values

Fuel Additives Fuel additives for gasoline and diesel include substances that prevent or reduce some of the harmful effects of raw fuel. Examples of these harmful effects are gum and tar formation and the corrosion of components. Antifreeze is added to gasoline for very cold climates and to diesel for all conditions where temperatures fall below freezing. Diesel fuel contains paraffin, which forms a wax at cold temperatures. This wax prevents the fuel from flowing. All winter-grade diesel fuel contains additives to provide protection for the area in which it is sold.

Fuel Supply A vehicle's fuel is held in a tank fitted in a safe position. Governmental regulations require that the tank be unlikely to rupture in a vehicle collision. The positioning and protection of the tank is considered at the design stage of the vehicle and tested during development. The tank is fitted with a filler neck and pipe work from the filler cap to the tank. Also fitted are the outlets to the atmospheric vent or evaporative canister and the fuel feed and return pipes to the engine. The fuel gauge is located in the fuel tank. Fuel supply and return lines are made from steel pipes, plastic pipes and flexible rubber joining hoses, depending on application and the type of fuel used.

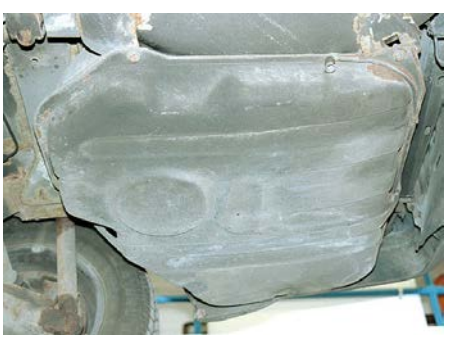
Fuel tank in position

Fuel Pumps A pump to supply fuel to the engine is fitted into or near the tank on gasoline-injection vehicles. On carburetor vehicles, a mechanical lift pump is fitted to the engine and is operated by a cam on the camshaft or crankshaft, or an electrical pump is fitted in the engine compartment. Diesel vehicles using a rotary fuel-injection pump may use the injection pump to lift fuel from the tank. Alternatively, they may have a separate lift pump similar to the ones used on carburetor engines. A separate priming pump fitted in the fuel line may also be used.

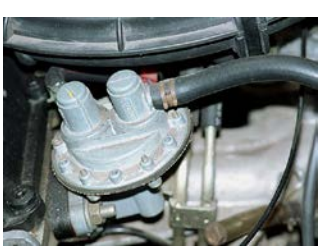
Mechanical fuel pump

Electrical fuel pump in the tank

Electrical fuel pump in the tank

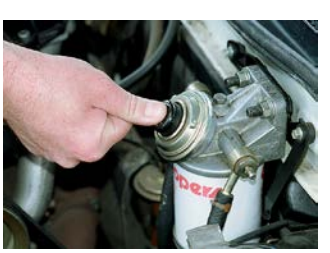
Diesel primer pump

Mechanical Lift Pump This diagram shows the operation of a typical mechanical fuel-lift pump. Refer to vehicle manuals for details of specific fuel pumps. Modern pumps are sealed units and have to be replaced as a complete unit if they become defective.

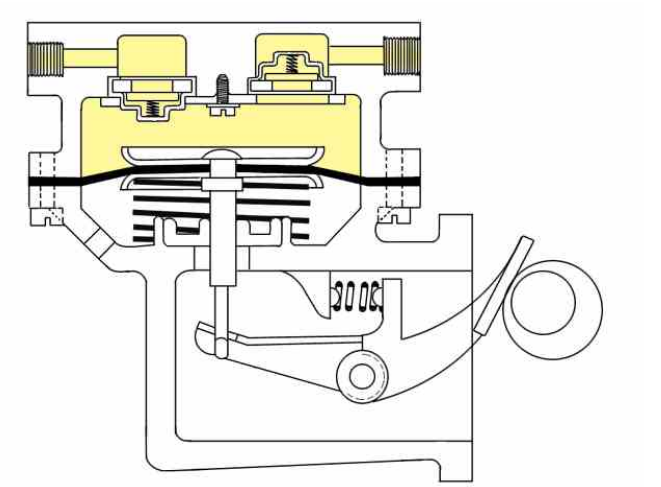

Operation of mechanical fuel lift pump

Explain what is meant by complete and incomplete combustion.

Read the previous section again and note down some key bullet points here:

-
-
-
-
-

Carburetors (Overview Only)

Carburetor The carburetor was the traditional method of mixing gasoline with air as it enters the engine. However, a simple carburetor is only capable of providing a correct air and fuel mixture ratio within a very small range of engine speed. A wide range of engine speed and a wide engine load are required for road vehicles. Complex carburetors are used to respond to the speed and load variations.

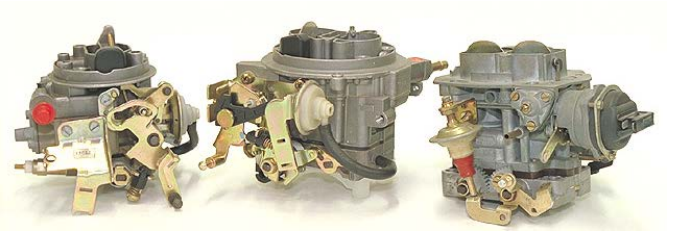

Single choke and twin choke carburetor

Basic Carburetor Designs There are two basic carburetor designs: the fixed-venturi and the variable-venturi types. The term choke is often used to describe the venturi, and this gives the alternative carburetor definitions of fixed-choke and variable-choke types. The usual meaning of the term choke is to describe the engine cold-start device fitted to the carburetor.

Fixed choke and variable choke carburetor

Function of the Carburetor The function of the carburetor is to meter a quantity of gasoline into the air stream entering the engine cylinders. As the pistons move down in the cylinders on the induction stroke, the pressure in the space above the cylinders falls. On naturally aspirated engines (that is, those that are not fitted with pressure chargers), atmospheric pressure provides the force for the airflow into the cylinders.

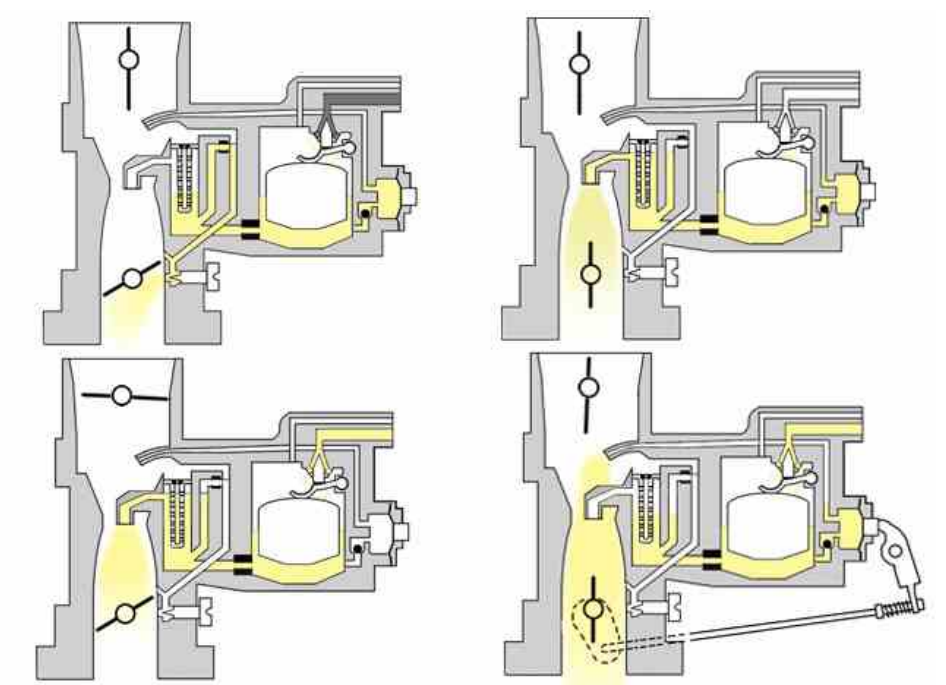

Carburetor metering fuel into the air stream

Research the six-stages of carburation

Throttle The greater the difference in pressure, the greater will be the volume of air that enters the engine and the speed of the airflow through the carburetor and inlet manifold. To meter the airflow, a valve is fitted at the base of the carburetor just in front of the inlet manifold. Called the throttle, this valve consists of a round plate on a spindle. The spindle has a lever attached to one end. This is connected directly to the throttle pedal with a cable or rods. The throttle restricts the airflow in all positions except when wide open, which gives a range of variable pressures in the carburetor and the inlet manifold.

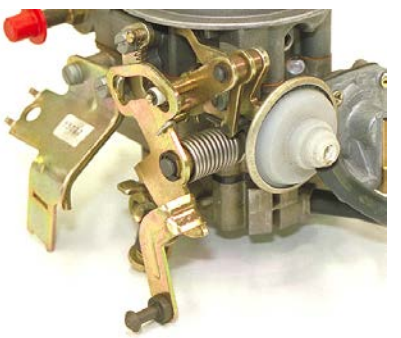

Throttle linkage

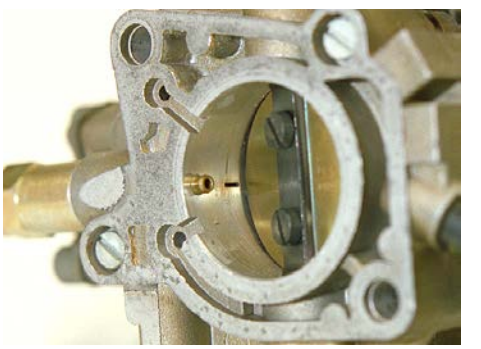

Throttle butterfly

Carburetor Design The variations or changes in air pressure and air speed are used in modern carburetors to control the amount of fuel that is metered into the engine. The developments in carburetor designs give more accurate metering of fuel-to-air across the range of engine speed and load conditions. However, advances in microelectronics and the very close tolerances required by environmental protection regulations have contributed to a reduction in use of the carburetor.

Explain why carburetors have been replaced by fuel injection systems.

Read the previous section again and note down some key bullet points here:

-
-
-
-
-

Mechanical Fuel Injection

Bosch K-Jetronic The system described in this section is Bosch K-Jetronic. Because of further developments, this system has become known as KE-Jetronic. In this case, it has an electronic control unit and lambda or exhaust-gas oxygen sensor for catalytic converter applications. The K-Jetronic system shown here is the basic version. This system can provide close to the optimum mixture strength under all engine operating conditions. It is a continuous-injection system providing a metered quantity of gasoline into the inlet ports of each cylinder.

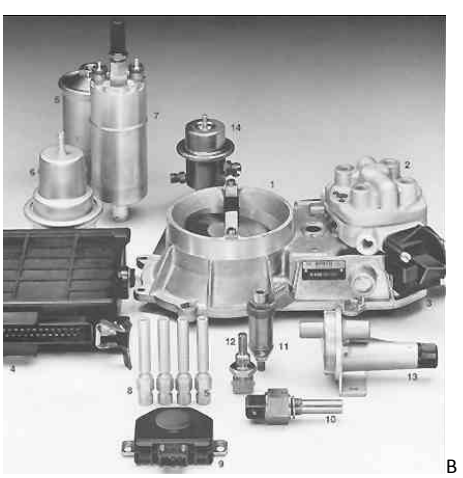

Bosch K-Jetronic components[3]

Air Fuel Ratio The mixture strength or air/fuel ratio is metered by a pressure differential in the fuel distributor. The pressure differential is regulated from the quantity of air drawn into the engine. The air quantity is controlled by the throttle plate in the air-intake duct. In the airflow meter is a sensing plate fitted to a counter-balanced lever, which is free to pivot on a spindle. The lever acts on a control plunger in the fuel distributor. The control plunger covers or uncovers slotted metering ports in the fuel distributor. Fuel under pressure flows through the metering ports and onto the fuel injectors.

Fuel distributor

Airflow sensing plate[3]

Injectors The injectors operate with an oscillating action at a pre-set pressure. This results in finely atomized fuel spraying into the inlet ports. Once the pressure drops, the injectors close. The amount of fuel delivered is dependent on the rate at which the pressure rises in the outlet side of the fuel distributor. When the airflow is low, the pressure rise is slow and the injector oscillation is at a low frequency. When the airflow is high, the pressure rise is quick and the injectors pulse at a higher frequency. This results in a greater quantity of fuel being delivered. In this way, there is a constant match of air and fuel to meet the engine operating conditions.

Bosch K-Jetronic Components There are three distinct groups of components on the K-Jetronic system. These are the air intake and airflow measurement components, the fuel supply components and the fuel distributor, and mixture control components.

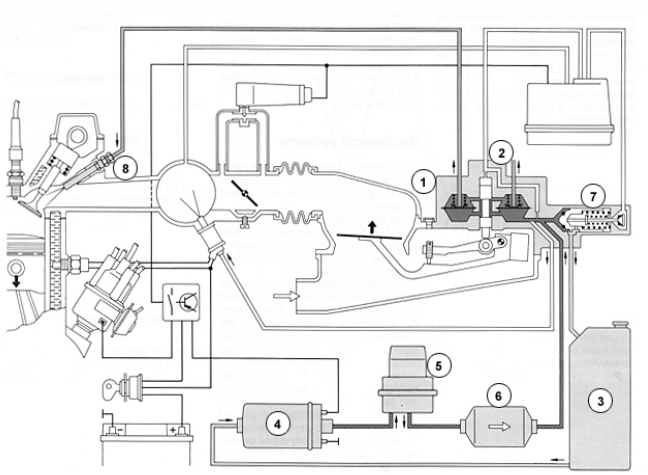

S

ystem layout[3]

Air Supply Components The air intake and air-filter housing are fitted below the airflow meter. The airflow meter is made up from a circular airflow sensor plate in an air funnel. The plate is attached to a counterbalanced lever and is lifted from the closed position by the airflow through the funnel. The lever acts on the control plunger in the fuel distributor. Acting in resistance to the lift of the control plunger is a compression spring and the control pressure used to regulate the amount of fuel that is delivered. The air funnel in the airflow meter is shaped so that the deflection of the airflow sensor plate produces a richer mixture when idling and at full load.

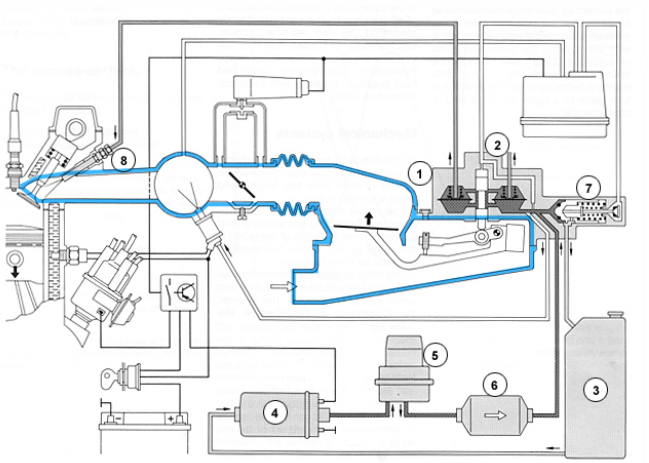

K-Jetronic air supply[3]

Fuel Supply Components The fuel supply components are shown here. The fuel pump is a roller-cell pump driven by a permanent-magnet electric motor. Fuel flows through the pump and motor. The delivery pressure is set by an excess pressure valve, which releases fuel back to the inlet side of the pump. There is a non-return valve in the pump outlet.

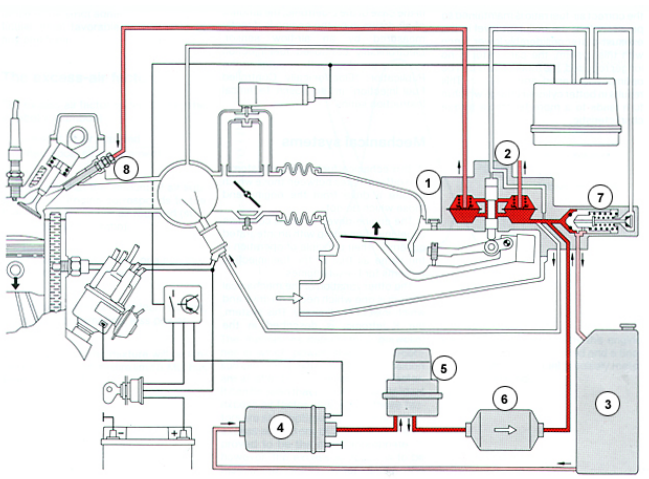

K-Jetronic fuel supply[3]

Fuel Pump The fuel pump electrical supply is live only when the engine is running or being cranked for starting. A special relay that senses the electrical pulses at the ignition coil is used for this purpose. This, in turn, provides a safety feature to stop the fuel supply in the event of an accident.

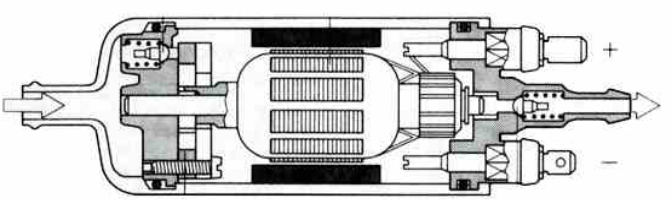

Fuel pump[4]

Roller Cell Fuel Pump The rollers in the pump are thrown out by centrifugal force when the motor armature and pump rotor spindle rotate. The rotor is fitted eccentrically to the pump body. As the rollers seal against the outer circumference, they create chambers that increase in volume to draw fuel in. The fuel is then carried around and finally discharged as the chamber volume decreases.

Accumulator and Fuel Filter Fitted in the fuel line are an accumulator and filter. The accumulator has a pressure chamber made up from the accumulator body and a spring-loaded diaphragm. The accumulator damps (reduces pressure oscillations) the pump operation and retains a reserve of pressure in the system. This helps starting when the engine is hot. The fuel filter is a micro-porous paper element and strainer type in a canister. It traps particles of dirt that are in the fuel, which might otherwise damage the fuel distributor and the injectors. These components are manufactured to very close tolerances. An arrow is stamped on the filter body to ensure correct fitting during service replacement.

Fuel filter

Primary Pressure Regulator A primary pressure regulator is fitted where the fuel enters the fuel distributor. This provides a constant system delivery pressure of about 5 bars. Excess fuel is returned to the gasoline tank via the return fuel pipe. The primary pressure regulator also includes a non-return valve in the return line of the fuel distributor control-pressure circuit. This helps to retain a reserve of pressure in that circuit. Fuel flows through the differential pressure valves, one for each cylinder, in the fuel distributor.

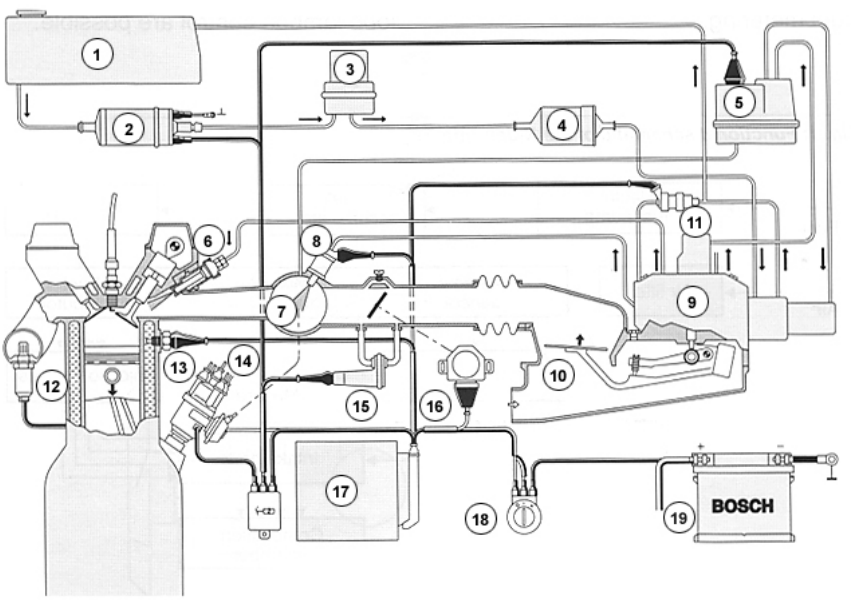

Primary pressure regulator as part of the system[3]

Fuel Injectors Pipes carry fuel to the fuel injector valves fitted in the inlet ports of each cylinder. The fuel injector valves open at a preset pressure of about 3.5 bars. When fuel pressure overcomes the spring pressure holding the valve needle closed, the valve is opened. Fuel is atomized by oscillation of the valve needle during injection. The amount of fuel delivered is dependent on the rate of rise in pressure in the fuel line. This, in turn, is dependent on the mixture control function in the fuel distributor.

Fuel Distributor The fuel distributor is a fuel metering device. It performs this function by responding to the position of the airflow meter and auxiliary components for cold start and warm-up. There is a differential pressure valve for each cylinder set radially around the control plunger.

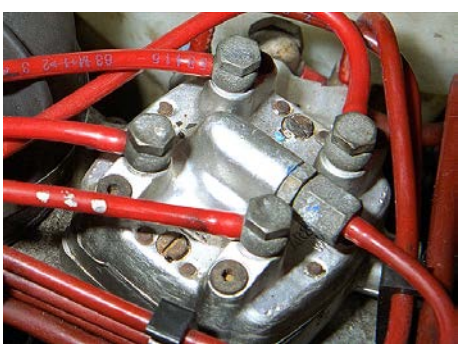
Fuel distributor is a metering device

Differential Pressure Valve A differential pressure valve consists of two chambers separated by a steel diaphragm. The lower chamber is supplied with fuel under pressure directly from the fuel pump. The pressure regulator is fitted in the fuel distributor and releases excess fuel to return to the fuel tank. This is to maintain a constant system pressure in the lower chambers of the differential pressure valves.

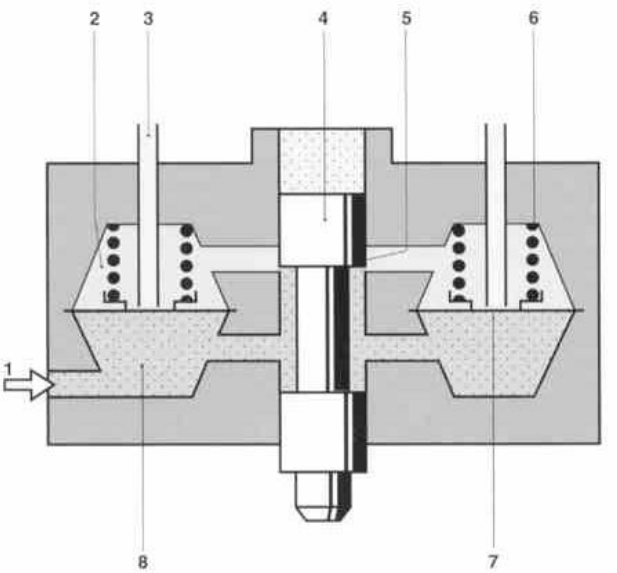

Differential pressure valve layout[3]

Warm Up Regulator When the engine is cold, a bimetal spring in the warm-up regulator acts against the compression spring. This holds the flat seat valve in a more open position so that a low control pressure is applied. The control plunger is now allowed to lift by a greater amount. This, in turn, means that the fuel distributor will deliver more fuel and enrich the mixture for smooth running. As the bimetal spring is heated, it bends to reduce its opposition to the compression spring. The valve now closes to its lowest value. The bimetal spring is also electrically heated when the engine is cold. This means that the response time is appropriate for the engine application.

Fuel Metering Under all engine running conditions, the metered fuel is proportional to the airflow. It is also subject to the control pressure and actions of auxiliary devices. Fuel metering occurs in the fuel distributor. It is regulated by the position of the control plunger. The metering ports are vertical slits in the barrel of the control plunger. These act as a restriction to fuel flow into the upper chamber of the differential pressure valves.

Control Plunger When the control plunger rises, the area of the metering slits is increased, allowing a greater flow of fuel. The control plunger is lifted by the airflow sensor plate and lever in the airflow meter, in opposition to the control pressure. Therefore, the amount of fuel delivered is proportional to the airflow. This maintains optimum air/fuel mixture for all operating conditions.

Cold Start Valve All K-Jetronic systems are fitted with a cold-start valve for starting enrichment. The cold-start valve is an electromagnetic injector fitted behind the throttle plate in the inlet manifold. The electrical supply is routed from the starter solenoid feed. The ground connection is made through a thermo-time switch fitted into the engine water jacket. The valve is only operated when the starter motor is cranking the engine and the thermo-time switch is conductive.

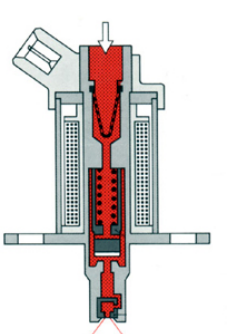
C

old start injector[3]

Thermo-Time Switch The thermo-time switch is made from a contact on a bimetal strip and a fixed contact on the body of the screwed sleeve. It is fitted into the engine block. The thermo or temperature-control function of the thermo-time switch is dependent on engine temperature. When the engine is cold, the bimetal strip holds the switch contacts together and the switch is conductive. When the engine heats up above about 35°C, the bimetal strip bends to open the switch contacts. To prevent excess fuel delivery if the engine is slow or fails to start, the bimetal spring is electrically heated by a winding. This makes the switch contacts open after about 10 seconds.

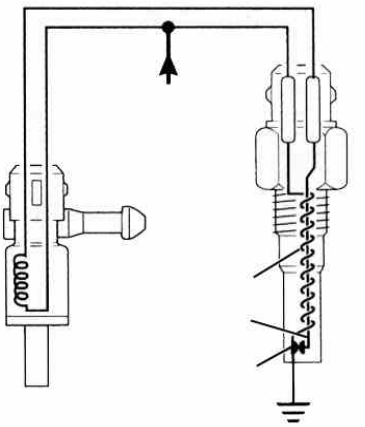

Thermo-time switch and circuit

Auxiliary Air Valve During engine cold starting and the warm-up phases, it is necessary to increase the engine speed to a fast-idle position. This is achieved by increasing the airflow into the engine through an auxiliary air valve. This valve is positioned in an air tube that bypasses the throttle plate. The valve is open when the engine is cold and closed by electrical heating of a bimetal strip or by engine heat acting on the bimetal strip.

Close up view of auxiliary air valve

Valve Action The bimetal strip applies a force onto the valve plate lever when the engine is cold, but as it heats up it bends, allowing the valve plate to be pulled toward the closed position by a spring. The closed valve restricts the airflow through the air tube of the auxiliary air valve and the engine fast idle steadily reduces as the engine warms up.

Bosch KE-Jetronic The KE-Jetronic system is a development of the K-Jetronic system. The KE is a mechanical system using differential pressure valves in a fuel distributor and continuous injection. The control of the quantity of fuel delivered is computed in an electronic control unit and regulated with a pressure actuator in the fuel distributor. The main differences between the K and KE systems are in the air measurement and mixture-control functions and the components of the system.

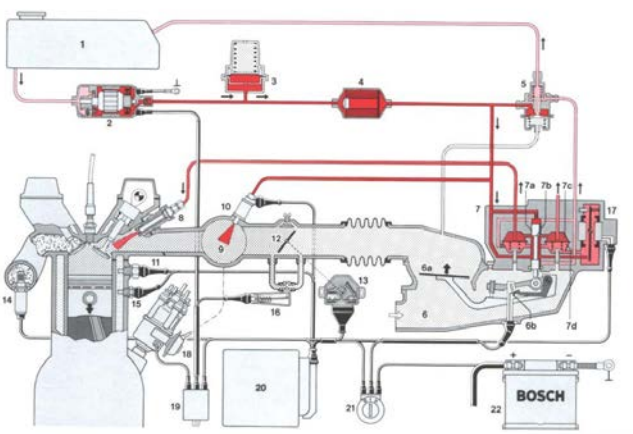

KE-Jetronic system components[3]

Fuel Distributor Inside the fuel distributor, the differential pressure valves have been redesigned from those used in the K-Jetronic unit. There are two chambers per cylinder separated by a fabric diaphragm fitted with a flat-seat valve. System pressure is applied in the upper chambers and flows through the flat-seat valves into the outlet ports for the fuel-injector valves. Control pressure is applied in the lower chambers to the underside of the fabric diaphragms. This varies the flat-seat valve opening values.

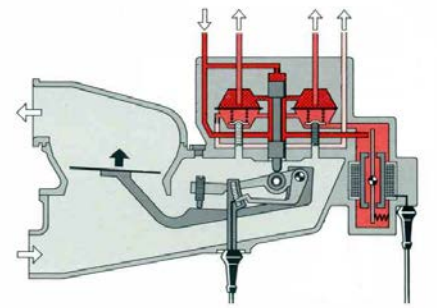

D

ifferential valve in fuel distributor[3]

Electro-magnetic Pressure Actuator An electromagnetic pressure actuator, which responds to signals from the ECU, is used to regulate the control pressure. The pressure actuator is a baffle plate valve. The baffle plate sits in front of a delivery jet, and the distance between the plate and jet is varied in order to control the flow rate through the valve.

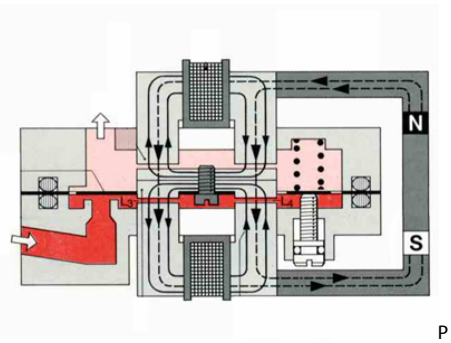

P

ressure actuator operation[3]

Catalytic Converter Where a catalytic converter and lambda sensor are fitted, the fuel-control module and pressure actuator operate in a closed-loop mode. This occurs when the engine is above a certain temperature and maintains the air/fuel ratio close to a lambda value of one. This gives the most efficient catalytic converter operation and optimum exhaust emission control.

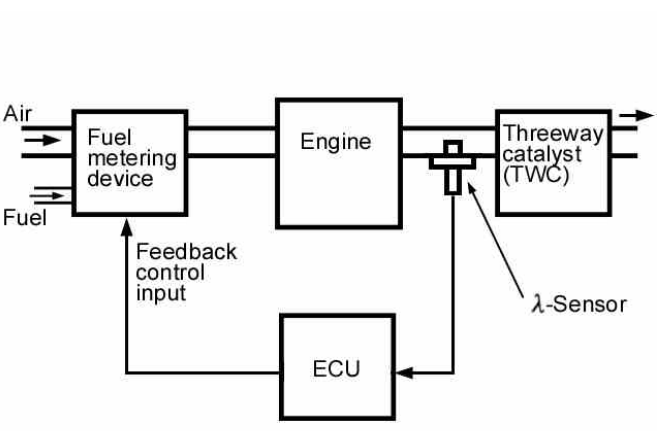

C

losed loop control sensors and connections

Describe how the air plate on the K Jetronic systems maintains air/fuel ratio.

Read the previous section again and note down some key bullet points here:

-
-
-
-
-

Electronic Fuel-Injection Systems

Electronic Fuel-Injection (EFI) Systems Electronic gasoline-injection systems have been in use for many years, first on sports vehicles and other expensive vehicles. Such systems are now standard equipment on most vehicles. The tougher standards of emission regulations have made the use of microelectronic control systems for fuel delivery a virtual necessity. There are many different manufacturers of electronic fuel systems. This program covers the main points of the systems.

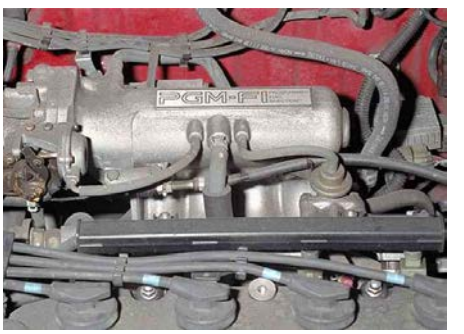

EFI system

Electronic Control Unit At the heart of electronic fuel-injection (EFI) systems is the fuel control or electronic-control unit (ECU) with a stored map of operating conditions. Electronic sensors provide data to the microprocessor in the ECU, which calculates and sends the output signals to the system actuators, which are the fuel pump, fuel injectors and idle air-control units. The ECU will also switch some of the exhaust emission and auxiliary system components.

ECU with inputs and outputs

Fuel Injection Methods Electronic fuel-injection (EFI) systems are named by the position and operation of the fuel injectors. There is a range of throttle-body injection (TBI) systems. They are also known as single point (SPI) or central point (CPI) systems. Regardless of name, the injector is positioned in a housing fitted on the inlet manifold. This is where the carburetor was traditionally fitted.

Throttle body injection (single point) 4

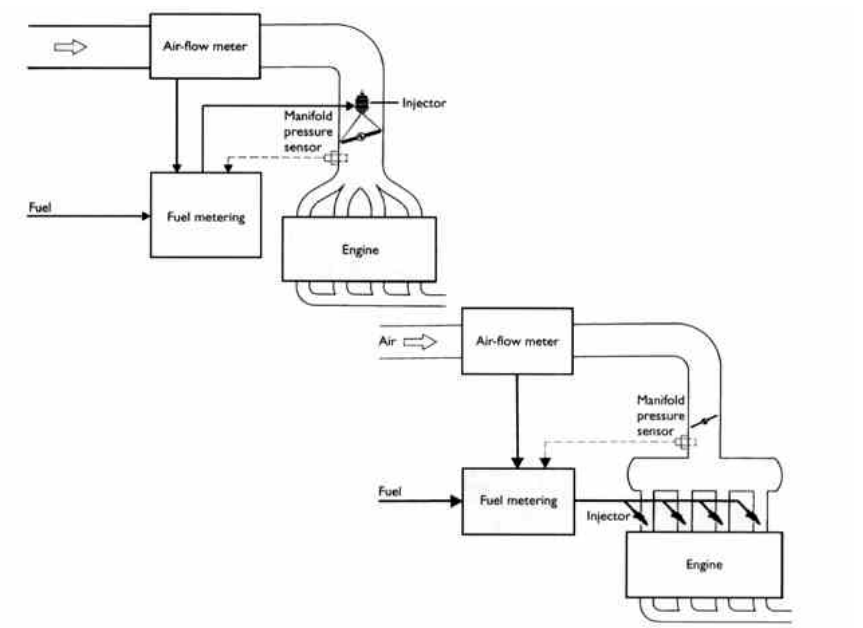

Ported injection (multipoint)4

Simultaneous and Sequential Injection The port fuel injection (PFI) or multipoint (MFI) systems have individual injectors for each cylinder. The injectors are fitted so that fuel is sprayed into the inlet ports. Port fuel-injection systems are either simultaneous, where all injectors operate at the same time, or sequential, where each injector operates on the induction stroke for each cylinder in turn.

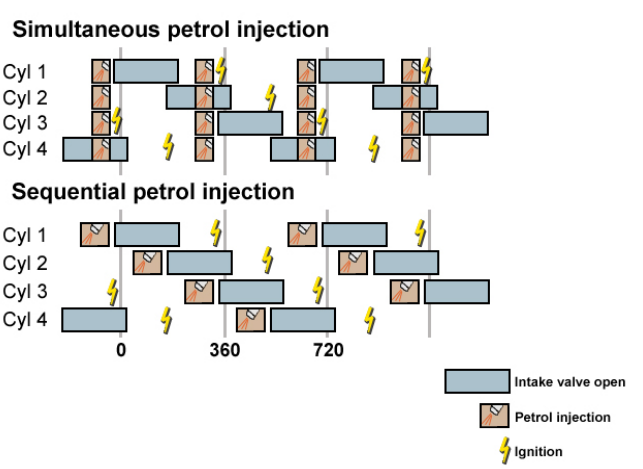

Types of fuel injection systems4

Gasoline Direct Injection (GDi) A recent development has been the introduction of a direct injection petrol engine where the fuel is injected into the combustion chamber.

Mitsubishi GDi

Engine Control Module Modern gasoline injection systems are linked to the ignition systems and are controlled by an engine control module (ECM). The latest developments have all electronic systems linked to form a power-train control module (PCM). This is also described as a vehicle control module (VCM). All modern fuel-injection systems have closed-loop electronic control using an exhaust gas oxygen sensor. For clarity, each electronic control unit will be referred to as an ECU.

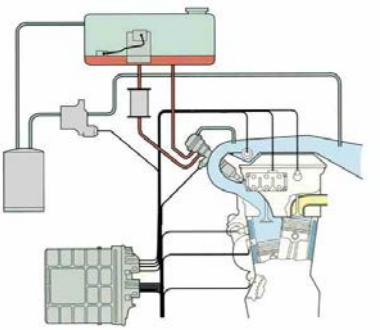

Ignition and fuel systems are combined1

Inputs and Outputs The components for any electronic fuel-injection system can be divided into four groups: The air supply components, the fuel supply components, the electronic control unit (ECU), together with the power supply and system harness, and the sensors which provide data to the ECU.

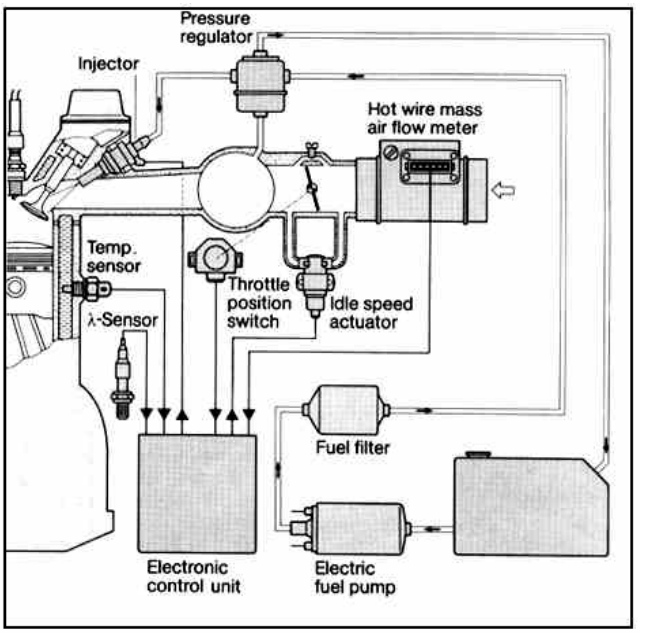

EFi components4

Air Supply Components The air-supply components consist of ducting and silencing components between the air intake and the inlet manifolds. This also includes an air filter, a throttle body, throttle plate assembly and idle control components. The air-supply components must provide sufficient clean air for all operating conditions. The airflow into the engine would be noisy and unbalanced between cylinders without the use of resonators and plenum chambers. A plenum chamber is a large-volume air chamber that can be fitted either in front of or behind the throttle plate housing.

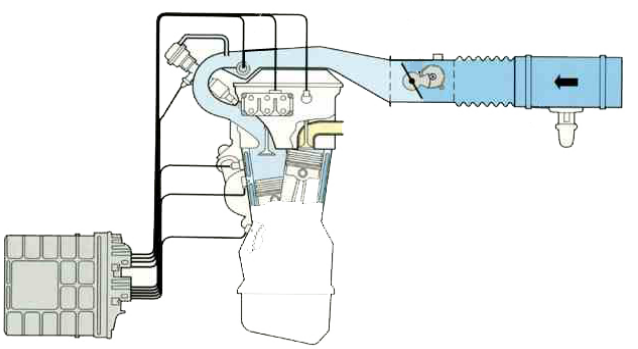

Air supply1

Air Filter Air filters on most modern gasoline-engined vehicles consist of a plastic casing with a paper filter element. Airflow into the filter is upwards so that dust and dirt particles drop into the dust chamber, or is rotary so that dust and dirt is thrown out before the air enters the engine. Crankcase ventilation and the air supply or pulse air exhaust emission systems are also connected to the filter assembly.

Air filter on a modern vehicle

Throttle Body The throttle is a conventional circular plate in an air tube. For fast idle and warm-up, an auxiliary air valve is fitted to bypass the throttle plate, or an electromechanical link is made to the throttle plate spindle. An auxiliary air valve, idle air control valve (IAC) or idle speed control valve (ISC) is operated by signals from the ECU.

Throttle body assembly

Auxiliary Air Valve Early designs of the auxiliary air valve use a disc with a calibrated aperture for closing or opening the bypass air channel. The disc is held closed by a pull-off spring and opened by a bimetal spring. When the engine is cold, the bimetal spring bends to open the valve. With the engine running, an electrical heating current acts on the bimetal strip. This causes it to bend and allow the pull off spring to close the air channel.

Rotary Air Valve A later development of the auxiliary air valve is the rotary air valve. This has a special electric motor to move and hold the valve in position. The position is based on the electrical signals supplied by the ECU. Two electrical windings in the motor work in opposition to each other so that the motor is variable over a 90° arc.

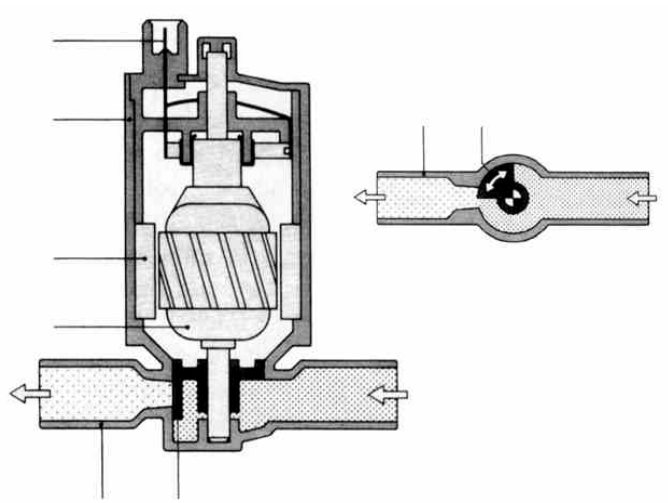

Development of the auxiliary air valve[3]

Solenoid Valve Other designs of auxiliary or 'extra air' valves have graduated opening values based on the strength of current supplied from the ECU. These valves operate to hold the idle speed to the stored data specification for engine temperature and load conditions. The valve consists of a solenoid valve with a spring-loaded armature connected to the valve in the air channel.

Solenoid air valve

Air Bypass The amount of air allowed to flow through the bypass channel of the auxiliary air valve is regulated by the position of the valve. At idle, the valve is continuously adjusted to stabilize the speed. When the throttle is closed during deceleration, the valve plate is adjusted to control exhaust emissions. During engine starting, the valve is open, and when the engine is switched off the valve is in the rest position.

Idle Speed Control Idle speed control can also be provided by direct action onto the throttle spindle. Electrical solenoids or stepper motors are used for this method of control. The solenoids can be single position or multi-position types and can be used for not only cold start and warm-up control but also to open the throttle when high load systems, such as the air conditioner, are switched on. Stepper motors give graduated positions depending on the supply current to a number of electrical windings. Sensors in the idle control mechanisms provide feedback signals to the ECU to provide data on operation and position.

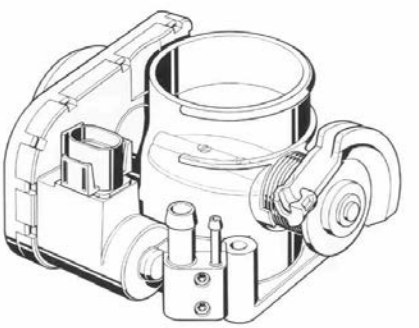

Throttle idle speed control[3]

Fuel Supply The fuel supply from the fuel tank to the injector valves for all electronic systems follows the same basic layout. The delivery of fuel at the injector valves is also based on a similar function for all systems. A basic layout of fuel supply components is shown here. A fuel pump is fitted either in, or close to, the fuel tank. A fuel filter is fitted in the delivery fuel lines from the tank to the fuel rail. A fuel pressure regulator is fitted on either the housing for throttle-body injector systems, or the fuel rail for port fuel-injection systems. The return fuel lines run from the pressure regulator to the fuel tank.

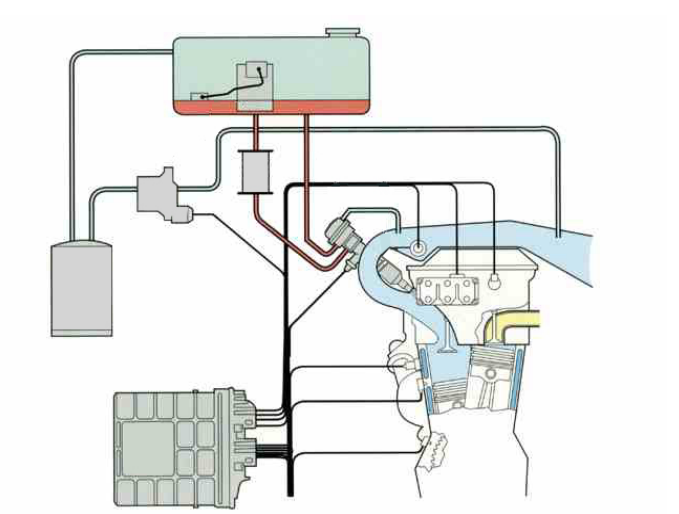

Fuel supply components[1]

Fuel Pump The fuel pump is a roller cell pump driven by a permanent-magnet electric motor. Though fuel flows through the pump and motor, there is no risk of fire because there is never an ignitable mixture in the motor. The delivery pressure is set by a pressure relief valve, which allows fuel to return to the inlet side of the pump when the operating pressure is reached. There is a non-return valve in the pump outlet. Typical delivery pressures are between 300 and 400 kPa (3 to 4 bars).

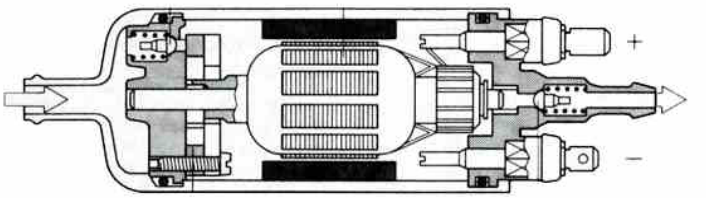

Roller cell pump

Roller Cell Pump The rollers in the roller cell pump are thrown out by centrifugal force when the motor armature and pump rotor spindle rotate. The rotor is fitted eccentrically to the pump body and as the rollers seal against the outer circumference, they create chambers that increase in volume to draw fuel in. They then carry the fuel around and finally discharge it as the chamber volume decreases.

Pump Electrical Supply The fuel pump electrical supply is live only when the engine is being cranked for starting or is running. The fuel pump electrical feed is from a relay that is switched on with the ignition. Safety features are built into the electrical control feed to the relay so that it operates only to initially prime the system or when the engine is running. The fuel-control module usually provides the control functions of the fuel pump relay.

Fuel pump[4]

Inertia Switch Another safety feature is the use of an inertia switch in the feed from the relay to the fuel pump. In case of an accident, this operates to cut the electrical feed to the fuel pump and to stop the fuel supply. It is an impact-operated switch with a weight that is thrown aside to break the switch contacts. Once the switch has been operated it has to be manually reset.

Fuel Filters The fuel filter is an in-line paper element type that is replaced at scheduled service intervals. The filter uses micro-porous paper that is directional for filtration. Filters are marked for fuel flow with an arrow on the casing. Correct fitting is essential.

An in-line paper element type

Fuel Pressure Regulation The fuel pressure regulator is fitted to maintain a precise pressure at the fuel injector valve nozzles. On port fuel-injection systems, a fuel rail is used to hold the pressure regulator and the fuel feed to the injector valves. The injector valves usually fit directly onto or into the fuel rail. The fuel rail holds sufficient fuel to dampen fuel pressure fluctuations and keep the pressure applied at all injector nozzles at a similar level.

Fuel pressure regulators on rail…

And on throttle body

Operation of the Fuel Pressure Regulator Fuel regulators are sealed units with a spring-loaded diaphragm and valve on the return outlet to the fuel tank. Fuel is pumped into the regulator, and when the pressure is high enough it acts against the diaphragm and compression spring to open the valve. Surplus pressure and fuel is allowed to return to the fuel tank. Once the pressure in the fuel regulator is reduced, the valve closes and the pressure builds up again. Throttle-body injection systems operate in the region of 1 bar, and port fuel injection systems in the region of 2.5 bars.

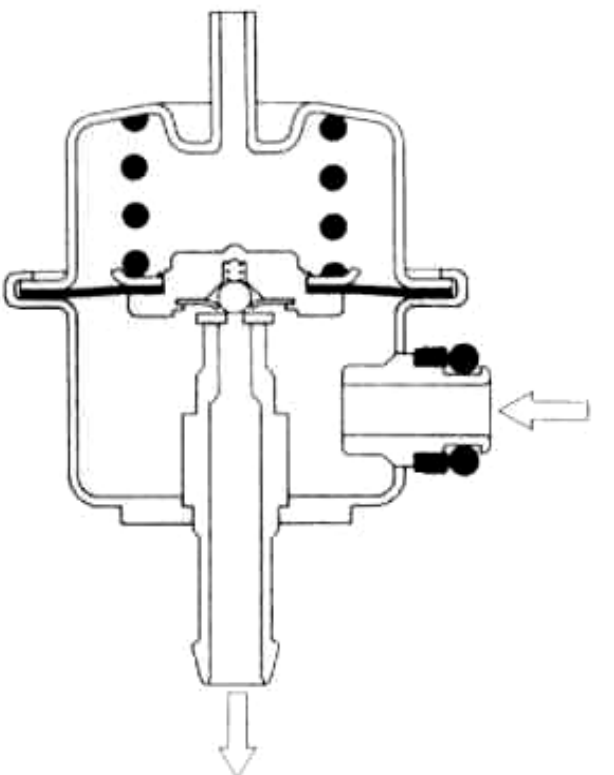

Fuel pressure regulator[4]

Inlet Manifold Vacuum On port fuel-injection systems, the inlet manifold vacuum acts against the compression spring in the fuel-pressure regulator. This is required to maintain a constant pressure differential between the fuel rail and the inlet manifold. With a constant pressure differential, the amount of fuel delivered during a set time will be the same irrespective of inlet manifold pressure.

Turbocharger For vehicles fitted with a turbocharger or supercharger, inlet manifold pressure is applied to the diaphragm and regulator valve. When the inlet manifold pressure rises above a certain value, the regulator valve is closed so that the full pump delivery pressure is applied to the injector valve nozzles. This raises the amount of fuel delivered to match the boosted air charge.

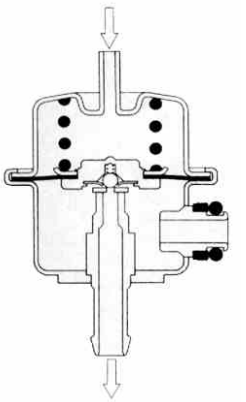

Pressure regulators 'boost' connection[3]

Injector Valves The injector valves spray finely atomized fuel into the throttle body or inlet ports, depending on the system. The electromagnetic injection valves are actuated by signals from the ECU. Depending on operating conditions, the signals are of a precise duration but are within the range of about 1.5 to 10 milliseconds. This open phase of the injector valve is known as the 'injector pulse width.'

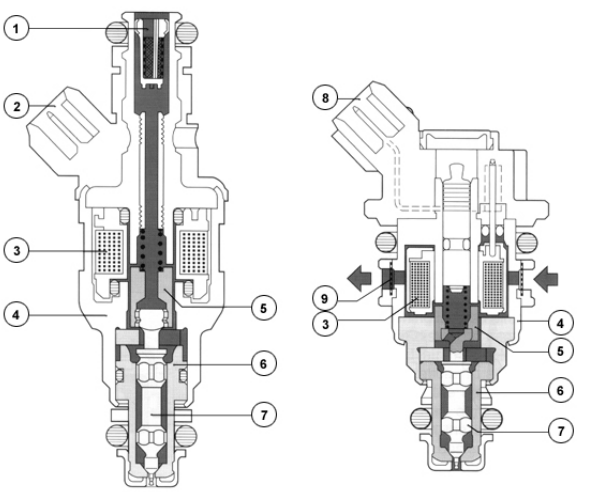

Injectors[3]

Solenoid Injectors There is a range of individual injector-valve designs, but all have the same common features. These are an electromagnetic solenoid, a spring-loaded plunger, a jet needle and the injector-valve nozzle. The electrical supply to the solenoid is made from the system relay or ECU. Grounding the other connection energizes the solenoid. This lifts the plunger and jet needle so that fuel is injected for the duration that the electrical current remains live. As soon as the electrical supply is switched off in the ECU, a compression spring in the injector valve acts on the solenoid plunger to close the nozzle.

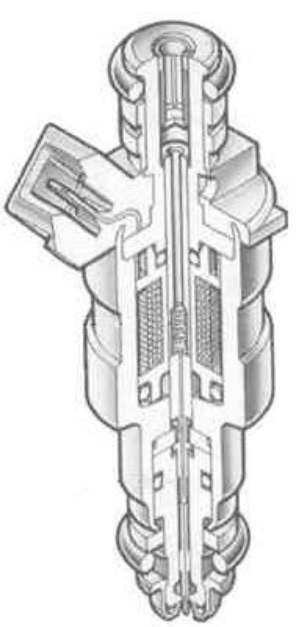

Injector detail[3]

Throttle Body Injector A fuel-injector valve for a throttle-body system is shown here. This cross-section view shows the housing, the magnetic coil for the electrical solenoid and the jet needle and nozzle.

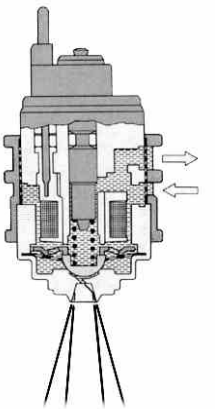

Throttle body injector valve detail[3]

Multipoint Injector A top-feed fuel-injector valve for port fuel-injection systems is shown here. This type of valve was generally used on older systems. One problem experienced with this fuel feed arrangement is fuel vaporization and bubbles forming in the fuel rail. The bubbles can cause starting and running problems. To overcome this problem, lateral or side- or bottom-feed injectors are used. An example of these types is shown here. When these injectors are fitted in the fuel rail any bubbles that may form will be at the top of the rail. Therefore, they will be flushed out through the regulator as soon as the fuel pump is actuated.

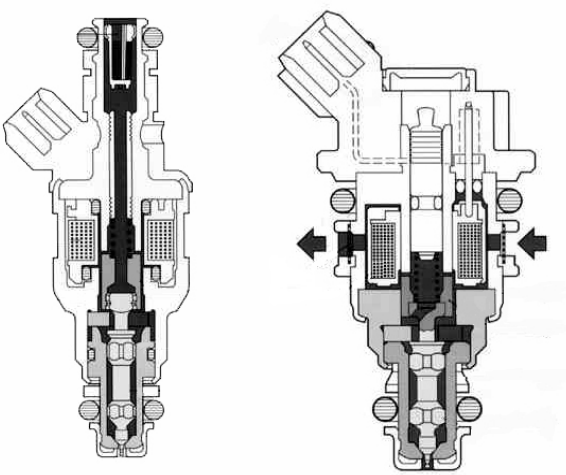

Top and bottom feed injectors[3]

Cold Start Injector Valve with a Thermo-Time Switch Early electronic fuel-injection systems used a cold-start injector valve with a thermo-time switch-control circuit. The cold-start injector valve is an electromagnetic solenoid valve. It is energized during starter motor operation but subject to the condition of the thermo-time switch. The cold-start injector valve operates only when the engine is cold and for a maximum time of about 10 seconds (when the ambient temperature is below -20°C). The time progressively shortens above this temperature. More recent electronic fuel-injection systems have the cold-start enrichment calculated in the ECU. The pulse width of the fuel-injector valves is increased to provide the extra fuel needed during start-up.

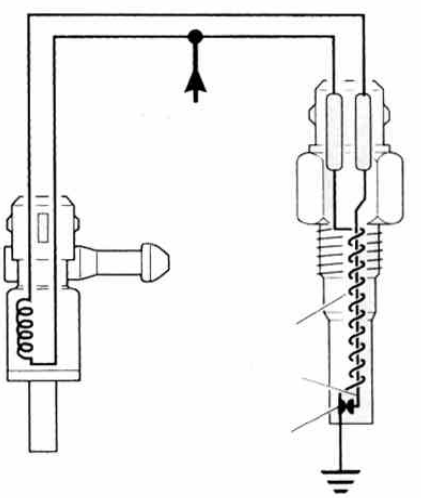

Cold start injector and circuit

Electronic-Control Unit (ECU) The electronic-control unit is an electronic microcomputer with a central processing unit (CPU) or microprocessor. Inside the CPU are software programs that compare all sensor-input data with a fixed map of operating conditions. It then calculates the required output signal values for the injection valves and other actuators. A computer program that demonstrates the operation of a fuel ECU and system is available from the automotive technology website at: www.automotive-technology.co.uk.

Inside an ECU

ROM and RAM The fixed map of operating conditions specific for each engine is held in a fixed-value memory or read only memory (ROM). The operating data of input values from the sensors is held in a random access memory (RAM). A 'keep alive' memory (KAM) of specific data such as adjustments, faults and deviations in component performance may also be used. The RAM data is erased when the ignition is switched off. The KAM data is erased when the battery is disconnected. New data is replaced in the RAM and KAM during engine start-up and operation.

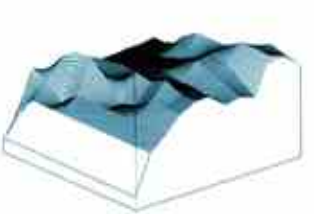

Fuel map[3]

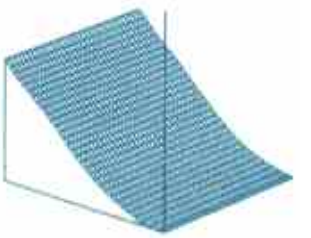

Transition map[3]

Dwell map[3]

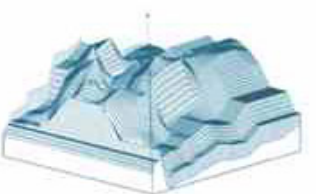

Injection map[3]

Cold Start and Warm Up Phases During the cold start and warm-up phases of engine operation, the computer operates in an open loop mode based on the sensor data. Once the engine reaches a certain temperature and the signals from the exhaust gas oxygen (or Lambda) sensor are logical, the computer operates in a closed-loop mode based on the data from this sensor.

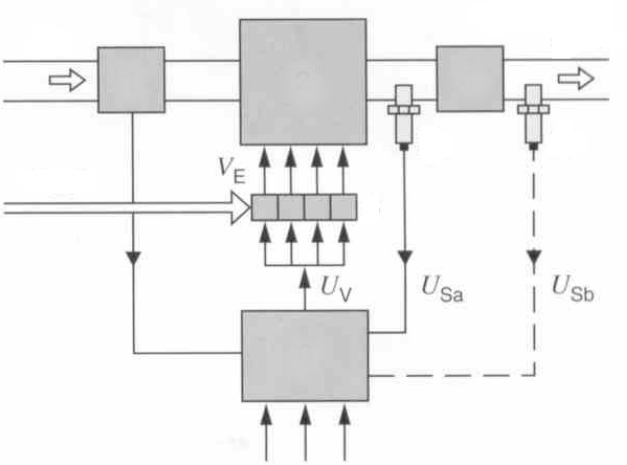

Closed loop control with lambda sensor[3]

CPU Operation Other programs in the CPU monitor the system and sensor data. They provide fault diagnosis and limp-home or a limited-operation strategy in the event any defects are detected. Other components in the ECU provide signal amplification and pulse shaping. This includes analogue to digital (A/D) converters for DC voltages, and pulse formers for AC voltages. The CPU requires digital signals for all processing functions. On the output side, power transistors are used for switching the actuator supply voltages either to the components or to a ground point.

Emission Control The ECU also operates the emission-control components at appropriate times depending on the engine operating conditions. Typical emission control actuators are the canister purge solenoid valve, the exhaust gas recirculation (EGR) valve and the secondary air solenoid valve. Secondary air is provided by either the air-injection reactive or pulse air systems.

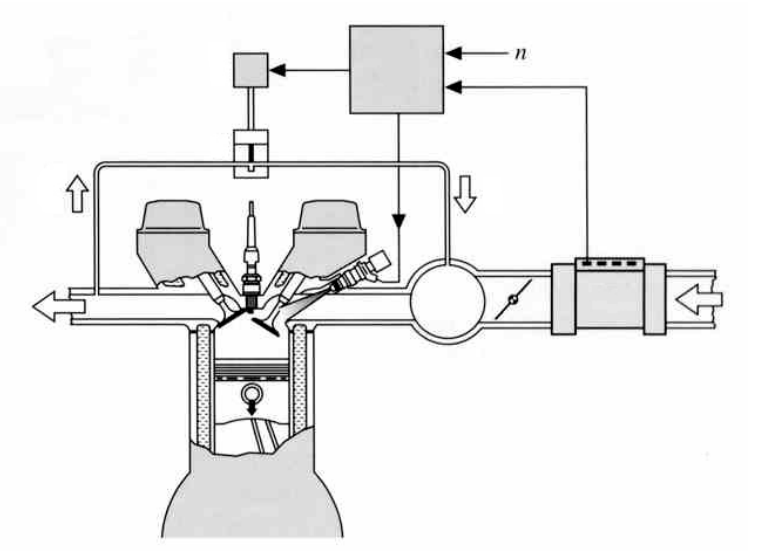

EGR system[3]

Electrical Harness The electrical harness for the engine management system is a complex set of cables and sockets. Cables have color and/or numerical coding and the sockets are keyed so that they can be connected in one way only. Special low-resistance connectors are used for low-current sensor wiring. Follow manufacturers' data sheets for further technical detail.

Injection wiring harness

Sensors Sensors provide data to the ECU. The engine speed and load conditions are used to calculate the base time value (in milliseconds) for the injector-pulse width. A range of correction factors are added to or subtracted from the base time value to suit the engine operating conditions occurring at all instances of time.

Calculation of injection time

Engine Speed and Position On early electronic fuel-injection systems, the engine speed was provided from signals obtained from the ignition low-tension primary circuit. On engine management systems, the engine speed and position is required for the ignition and fuel systems.

Inductive speed sensor

Continuous Injection Systems On continuous injection systems, the fuel is injected on the induction strokes when one of the inlet valves is open. On the other stroke, fuel is injected into the inlet port where it remains until the valve opens. On sequential systems, a single fuel charge is injected during the inlet valve open stage. Accurate engine speed and position sensing is required for this to occur correctly.

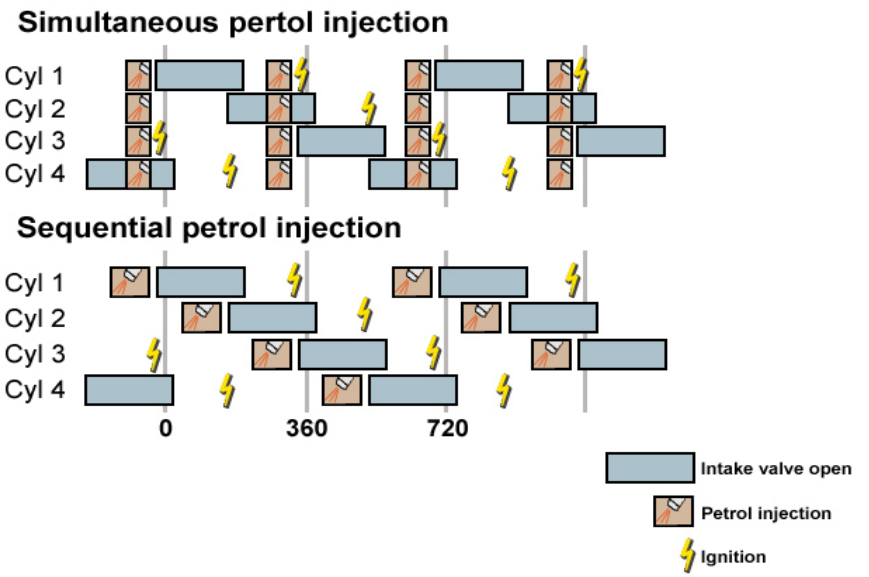

Injection process[4]

Methods of Engine Speed and Position Sensing There are two methods of engine speed and position sensing. The older system is a conventionally geared distributor with an inductive or Hall-effect generator. This provides an alternating signal current that is used by the ignition system. It is also used for engine speed sensing in the fuel electronic-control module.

Distributor for engine speed and position sensing

Inductive Pulse Generators Most of the latest systems have inductive pulse generators mounted close to, and responding to, a toothed wheel attached to the crankshaft pulley or flywheel. There is an air gap between the toothed wheel and the inductive generator. As the teeth pass the inductive generator, an alternating electrical current is produced. The waves of the alternating current are used to measure engine speed. For position sensing, a missing or different size of tooth or mask opening on the sensor ring is used. A distributor can also provide a reference for No. 1 cylinder at top dead center (tdc). When a sensor is fitted to determine the crankshaft position, this is suitable for continuous injection systems.

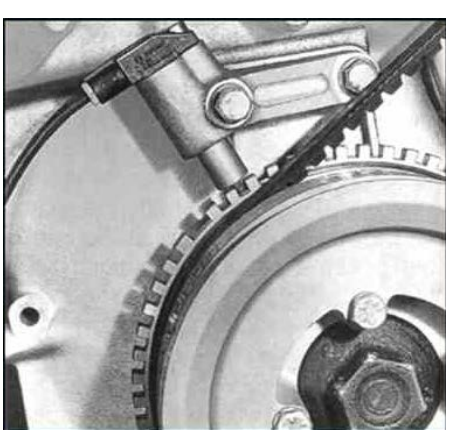

Inductive pulse generators on crankshaft pulley

Sequential Injection For sequential injection, a camshaft position sensor or phase sensor in the distributor is used to recognize the position of No, 1 cylinder. The ECU is then able to follow the engine firing order.

Camshaft position sensor

AC Voltage Pulse Inductive sensors produce an output pulse each time a lobe or tooth passes the inductive coil. The frequency and pattern of the pulses is used by the ECU to determine the engine speed and position.

Airflow Meter The fuel requirement is calculated in the ECU from the engine speed and load conditions. An airflow meter is one method of measuring the engine load conditions. A variable voltage, corresponding to the measured value at the airflow meter, is used by the ECU to calculate the amount of fuel needed to give a correct air/fuel ratio.

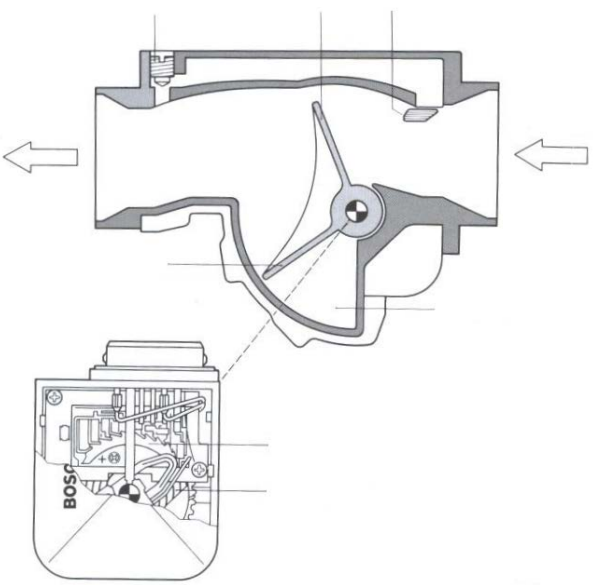

Airflow meters provide data to the ECU[4]

Engine Load Engine load can also be determined from the inlet manifold absolute pressure (MAP), and this is used on some systems to provide the data. In these systems, an airflow meter is not used.

MAP sensor

Airflow Metering There are two main types of airflow meters. These are the vane type (volume airflow - VAF) and the resistive types (mass airflow - MAF). The vane type air flow meter consists of an air passage and damping chamber into which is fitted a fixed pair of flaps (or vanes). These rotate on a spring-loaded spindle. The spindle connects to and operates a potentiometer and switches.

Vane type airflow meter

Flap Type Airflow Meter Airflow through the meter acts on the intake air flap to move it in opposition to the spring force. The integral damper flap moves into the sealed damper chamber to smooth out the intake pulses. The degree of flap movement and spindle rotation is measurable at the potentiometer as a variable voltage dependent on position. The voltage signal, together with other signals, is used in the ECU to calculate the fuel requirement.

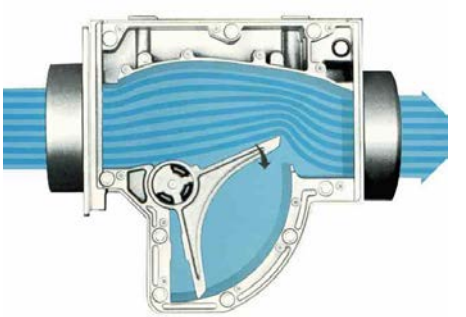

Action of the vane airflow meter[3]

Bypass Air Duct A bypass air duct is built into the housing. This provides for starting without opening the throttle, a smooth airflow during engine idle and a means to adjust the idle mixture.

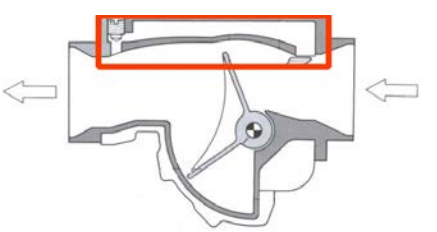

Air bypass[3]

Mass Airflow Meters Mass airflow meters are fitted with two similar resistors inside an air tube. A measurement resistor is heated and often referred to as a hot wire. The other resistor is not heated. It provides a reference value for use in the calculation of the air mass. The control circuit maintains the temperature differential between the two resistors. The signal sent to the ECU is proportional to the current required to heat the measurement resistor and maintain the temperature differential. The output signal from some mass airflow meters is similar to the air vane types. However, some produce a digital output signal.

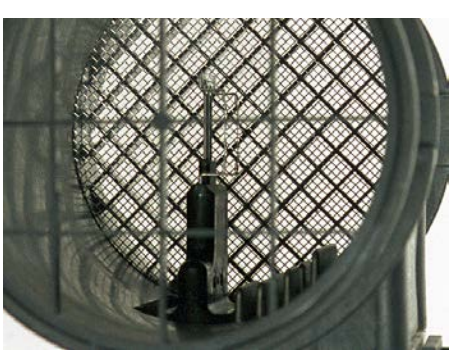

Hot wire/film air flow meters[4]

Manifold Absolute Pressure Sensor On some EFI systems, manifold absolute pressure (MAP) sensor signals are used by the ECU to calculate the fuel requirements. These systems do not have an airflow meter. The signals from manifold absolute pressure, engine speed, air charge temperature and throttle position are compared in the ECU to calculate the injector pulse width.

MAP sensor

Crank sensor

Throttle potentiometer

Air temperature sensor

MAP Sensor The MAP sensor is a pressure-sensitive component consisting of a diaphragm and piezoelectric circuit. It can be a component fitted in the engine compartment or be integral with the ECU. It is connected by a rubber hose to the inlet manifold. The ECU supplies a stabilized reference voltage, usually 5 V, to the sensor. This voltage is adjusted by the MAP sensor electronics to provide an output signal proportional to the sensed absolute atmospheric pressure.

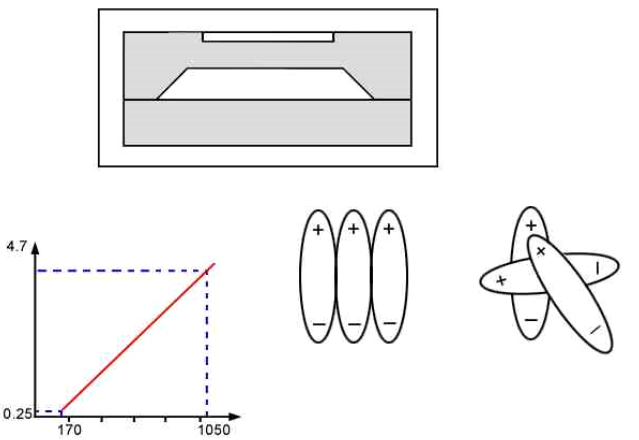

Internal detail of a MAP sensor

Sensor Output The actual pressure in the manifold is read as a proportional voltage, typically from 4.5 volts at high pressure, to 0.1 volts at low pressure. The electronic circuitry in some MAP sensors converts the reference voltage to a frequency signal that is fed back to the ECU. This is as a proportional frequency (80 to 165 Hertz), depending on the vacuum or pressure in the inlet manifold. When the pressure is high, such as at the wide-open throttle position, the MAP sensor may also provide a reference signal for actual barometric pressure. This is used as a correction value for changes in altitude, which could lead to poor performance.

Throttle Position Sensor Two types of throttle-position sensor are used. Both are fitted to the throttle body and operated by the throttle plate spindle. The two types are a throttle switch assembly and a throttle potentiometer. A throttle switch assembly has two switches, one to indicate the closed throttle or idle position and the other for the wide-open throttle position. A throttle potentiometer is a variable resistor with a rotary sliding contact. The sliding contact is moved along the rotary resistance track to provide changes in voltage proportional to the position of the throttle.

Throttle Potentiometer The throttle potentiometer signals are used in the ECU for a number of functions. At the closed throttle position, idle speed and deceleration fuel cut-off are controlled. In the part-open throttle position (about 5 percent to 70 percent open there is normal operation with close control of fuel delivery and exhaust emissions. In the wide-open throttle position (70 percent to 100 percent), full-load enrichment is provided. This also allows the starting of a flooded engine. During rapid movement of the throttle plate there is acceleration enrichment, depending on the rate of change of the throttle plate and signal voltages from the sensor.

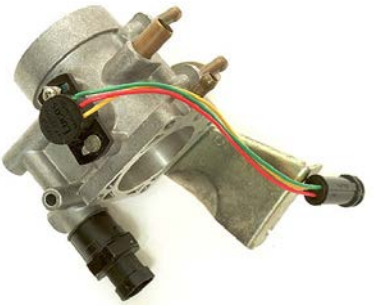

Throttle body with position sensor

Air Intake Temperature Sensor In order for the ECU to correctly calculate the required fuel for a correct mixture ratio, an accurate figure for air mass is necessary. However, air volume and density are affected by changes in temperature. As the temperature rises, the air density falls. The airflow, or manifold absolute pressure measurement, therefore, must be corrected for temperature. The sensor is a temperature-dependent resistor with a negative temperature coefficient (NTC).

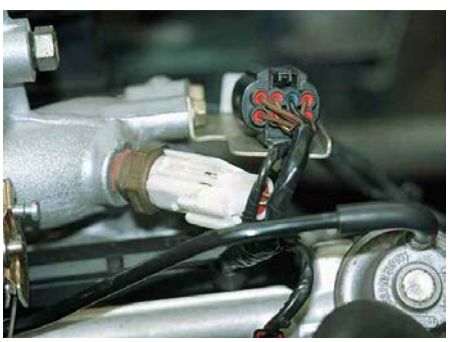

Intake air temperature sensor

Engine Coolant Temperature Sensor The engine coolant temperature sensor is a negative temperature coefficient (NTC) thermistor. It is of a similar type to the air-temperature sensor. It is fitted into the water jacket close to the thermostat or to the bypass coolant-circuit passages. The sensor measures the engine coolant temperature and provides a signal voltage to the ECU. This is used for cold start and warm-up enrichment as well as fast idle speed control through the idle-speed control valve.

Coolant thermistor

Exhaust Gas Oxygen Sensor The Greek letter (λ) lambda is used as the symbol for a chemically correct air-to-fuel ratio. This is the stoichiometric ratio of 14.7 parts of air to 1 part of fuel by mass. Hence, the use of this letter for naming the sensor that is used to control the amount of fuel delivered. Using a lambda sensor means that a very close tolerance of stoichiometric ratio is maintained.

Lambda Sensor The lambda sensor is often known as an exhaust-gas oxygen sensor. Some of these sensors are electrically heated. Preheating allows the sensor to be fitted lower in the exhaust stream and prolongs the life of the active element. The sensor measures the presence of oxygen in the exhaust gas and sends a voltage signal to the engine electronic-control unit.

An exhaust gas oxygen sensor

Oxygen Content More fuel is delivered when oxygen content is detected and less fuel when it is not. In this way, an accurate fuel mixture close to the stoichiometric ratio is maintained. This produces the correct exhaust-gas constituents for chemical reactions in the catalytic converter. Exhaust gases pass over the active element, and when the oxygen concentration on each side is different, an electrical voltage is produced. Typical outputs are about 0.8 volts for little or no exhaust oxygen and 0.2 volts for higher content.

Systems in Operation Sensors The sensors for power steering and air conditioning are pressure or mechanically operated switches. They provide a voltage signal when the system is in operation. The ECU uses these signals to increase the engine idle speed to accept the increased engine load.

Power steering sensor

Automatic Transmission Switches are used in the automatic transmission. They include the neutral drive switch, which is used for idle speed control, the kick-down switch for acceleration control, and the brake on/off switch, which is used to ensure that the torque converter lock-up clutch is released. This is to prevent the engine from stalling as the vehicle comes to a stop.

A switch makes when in the park and neutral position

Exhaust Gas Recirculation A transducer measures exhaust gas pressure. It uses a ceramic resistance transducer, which responds to the exhaust gas pressure applied through a pipe connection to the exhaust system. The signal voltage from the electronic pressure transducer is used to regulate the EGR valve. The valve may be operated directly from the ECU if electromechanical or by vacuum through a solenoid vacuum switch.

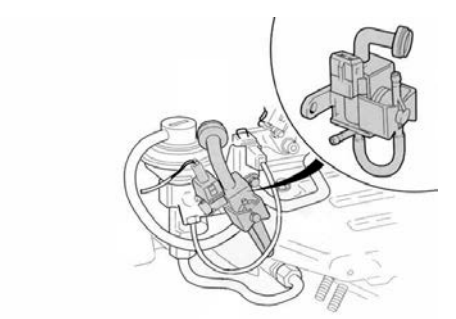

EGR valve[1]

Other Correction Factors Other correction factors are fuel temperature, octane rating, remote CO adjustment and the service plug or OBD connections. These sensors, variable resistors, switches and multi-plugs provide additional data to the ECU. The fuel temperature sensor is fitted in the fuel rail. At a preset value, a bimetal strip bends to close the signal circuit to the ECU. This signal (together with other signals) is used by the ECU for optimum fuel delivery during hot engine starting.

Corrections to injection time

Malfunction Indicator Light Service and on-board diagnostic (OBD) plugs are used for diagnostic and corrective actions with scan tools, dedicated test equipment and other test equipment. If faults are detected, the system malfunction indicator lamp on the vehicle dashboard will come on. Alternatively, it will fail to go out after the preset time duration after switching on the engine. All faults should be investigated as soon as possible. Many electronic systems have a 'limp home' or limited operation strategy program, which allows the vehicle to be driven to a workshop for repair.

Describe the operation of a fuel pressure regulator as manifold pressure/vacuum changes.

Read the previous section again and note down some key bullet points here:

-
-
-
-
-

Bosch DI-Motronic

Gasoline Direct Injection Bosch's high-pressure injection system for gasoline engines is based on a pressure reservoir and a fuel rail, which a high-pressure pump charges to a regulated pressure of up to 120 bar. The fuel can therefore be injected directly into the combustion chamber via electro-magnetic injectors.

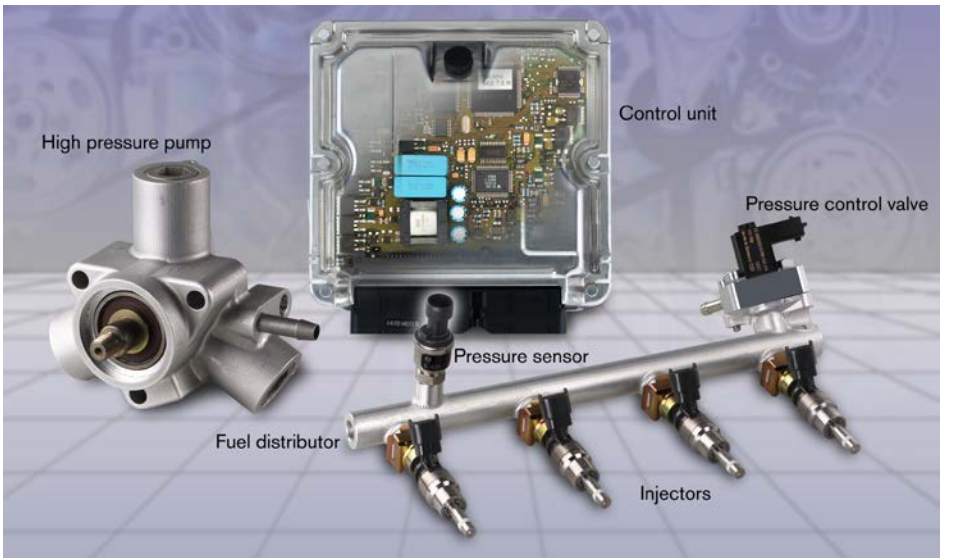

Components of gasoline direct injection from Bosch[4]

Air Mass The air mass drawn in can be freely adjusted through the electronically controlled throttle valve and is measured with the help of an air mass meter. For mixture control, a wide-band oxygen sensor is used in the exhaust, before the catalytic converters. This sensor can measure a range between lambda = 0.8 and infinity. The electronic engine control unit regulates the operating modes of the engine with gasoline direct injection in three ways:

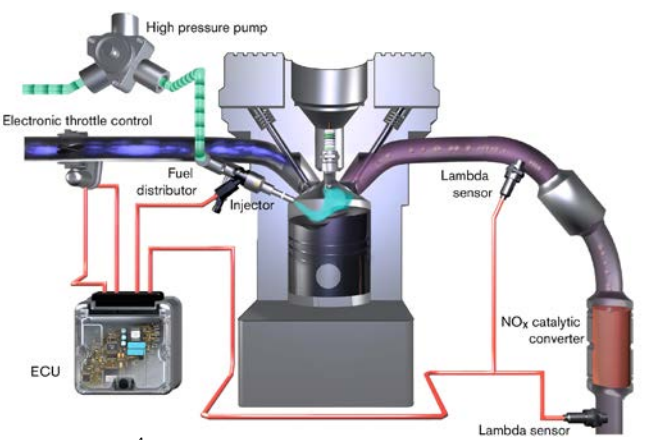

Bosch DI-Motronic[4]

Stratified charge operation – with lambda values greater than 1

Homogenous operation – at lambda = 1

Rich homogenous operation – with lambda = 0.8.

Injection Time The expertise of Bosch also is reflected in the high-pressure injectors of the DI-Motronic. Compared to the traditional manifold injection system, the entire fuel amount must be injected in full-load operation in a quarter of the time. The available time is significantly shorter during stratified charge operation in part-load. Especially at idle, injection times of less than 0.5 milliseconds are required due to the lower fuel consumption. This is only one-fifth of the available time for manifold injection.

Injector for direct injection under test[4]

Atomization The fuel must be atomized very finely in order to create an optimal mixture in the brief moment between injection and ignition. The fuel droplets for direct injection are on average smaller than 20µm. This is only one-fifth of the droplet size reached with the traditional manifold injection and one-third of the diameter of a single human hair. This improves efficiency considerably. However, even more important than fine atomization is even fuel distribution in the injection beam. This is done to achieve fast and uniform combustion.

Fuel droplet size is important[4]

The Function of Bosch DI-Motronic Conventional spark ignition engines have a homogenous air/fuel mixture at a 14.7 to 1 ratio, corresponding to a value of lambda = 1. Direct injection engines, however, operate according to the stratified charge concept in the part-load range and function with high excess air. In return, very low fuel consumption is achieved.

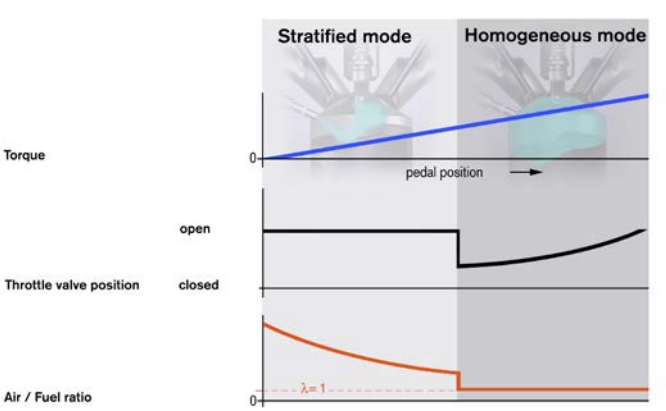

Switching between operating modes

Injection Timing With retarded fuel injection, a combustion chamber split into two parts is an ideal condition, with fuel injection just before the ignition point and injection directly into the combustion chamber. The result is a combustible air/fuel mixture cloud on the spark plug, cushioned in a thermally insulated layer, composed of air and residual gas. This raises the thermo-dynamic efficiency level because heat loss is avoided on the combustion chamber walls. The engine operates with an almost completely opened throttle valve, which avoids additional alternating charge losses.

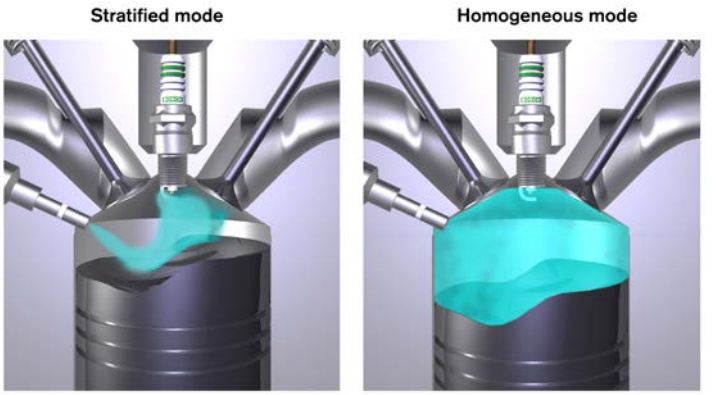

Operating modes[4]

Fuel Savings With stratified charge operation, the lambda value in the combustion chamber is between about 1.5 and 3. In the part-load range, gasoline direct injection achieves the greatest fuel savings with up to 40% at idle compared to conventional gasoline injection processes.

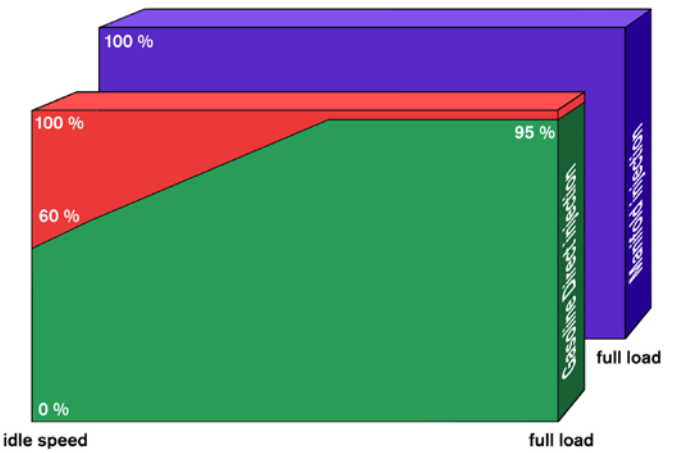

I

mprovements in fuel economy[4]

Homogenous Operation at Higher Load With increasing engine load, and therefore increasing injection quantities, the stratified charge cloud becomes even richer and emission characteristics become worse. Like diesel engine combustion, soot may form. In order to prevent this, the DI-Motronic engine control converts to a homogenous cylinder charge at a pre defined engine load. The system injects very early during the intake process in order to achieve a good mixture of fuel and air at a ratio of lambda = 1.

Fuel Calculation With increasing engine load, and therefore increasing injection quantities, the stratified charge cloud becomes even richer and emission characteristics become worse. Like diesel engine combustion, soot may form. In order to prevent this, the DI-Motronic engine control converts to a homogenous cylinder charge at a pre defined engine load. The system injects very early during the intake process in order to achieve a good mixture of fuel and air at a ratio of lambda = 1.

ECU

Injection Point For these different operating modes, two central demands are raised for engine control:

The injection point must be adjustable between 'late' (during the compression phase) and 'early' (during the intake phase) depending on the operating point.

The adjustment for the drawn-in air mass must be detached from the throttle pedal position in order to permit un-throttled engine operation in the lower load range. However, throttle control in the upper load range must also be permitted.

With optimal use of the advantages, the average fuel saving is up to 15%.

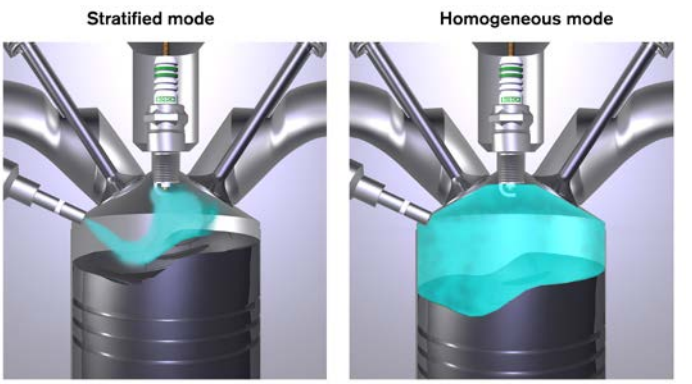

The injection point must be adjustable[4]

Nitrogen Oxides In stratified charge operation the nitrogen oxide (NOx) segments in the very lean exhaust cannot be reduced by a conventional, three-way catalytic converter. The NOx can be reduced by approximately 70% through exhaust returns before the catalytic converter. However, this is not enough to fulfill the ambitious emission limits of the future. Therefore, emissions containing NOx must undergo special treatment. Engine designers are using an additional NOx accumulator catalytic converter in the exhaust system. The NOx is deposited in the form of nitrates (HNO_3) on the converter surface, with the oxygen still contained in the lean exhaust.

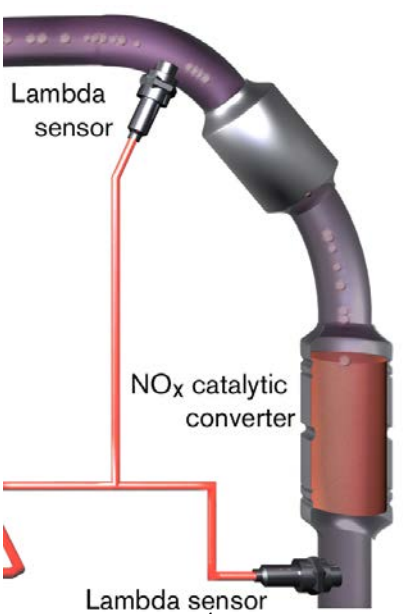

NOx catalytic converter[4]

Emissions The capacity of the NOx accumulator catalytic converter is limited. As soon as it's exhausted, the catalytic converter must be regenerated. In order to remove the deposited nitrates, the DI-Motronic briefly changes over to its third operating mode (rich homogenous operation with lambda values of about 0.8). The nitrate together with the carbon monoxide (CO) is reduced in the exhaust to non-harmful nitrogen and oxygen. When the engine operates in this range, the engine torque is adjusted according to the gas pedal position via the throttle valve opening. Engine management has the difficult task of changing between the two different operating modes, in a fraction of a second, in a way not noticeable to the driver.

Summary The continuing challenge, set by legislation, is to reduce vehicle emissions to very low levels. Bosch is a key player in the development of engine management systems. The DI Motronic system, which is now or will soon be used by many manufacturers, continues to reflect the good name of the company.

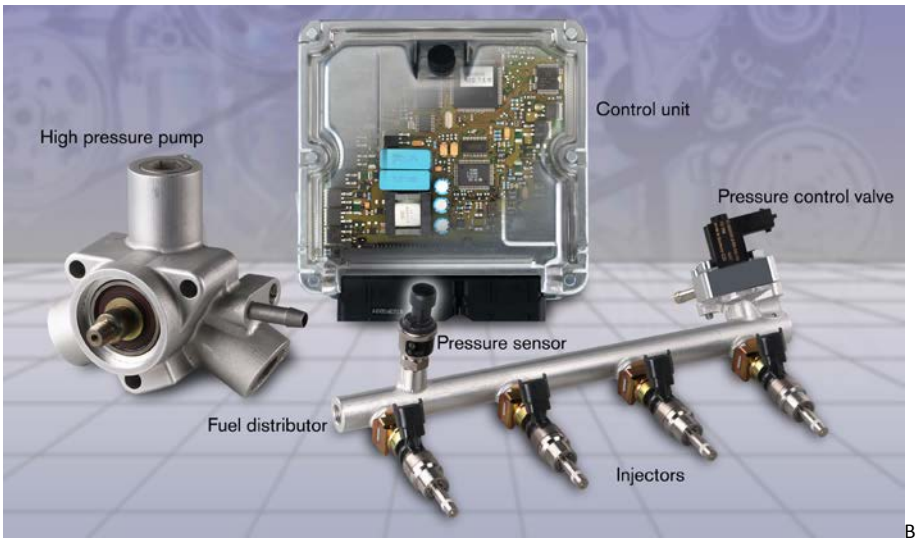

Bosch DI-Motronic components[4]

Explain the advantages of direct gasoline injection systems.

Read the previous section again and note down some key bullet points here:

-
-
-
-
-

Emission Control Systems

Crankcase Ventilation Oil vapor occurs in the engine crankcase because of heat, spray and the churning action of engine components as the engine is running. A fine mist of oil vapor is always present in a running engine. The engine crankcase pressure is never constant. Slight leakages into and from the combustion chambers, and the movement of the pistons, are responsible for most of the pressure variations.

Open Ventilation A vent-to-atmosphere system was once used for ventilating pressure variations in the engine. This simple vent allowed a large quantity of oil vapor to escape. By fitting an oil separator the quantity of oil was reduced, but unacceptable quantities of oil vapor were still emitted. New developments include a positive crankcase ventilation system. This system takes any escaping oil vapor into the engine for combustion.

Not acceptable today

Positive Ventilation The main features of all systems include an oil separator, pipes and hoses from the crankcase, a valve or restrictor, and hoses into the intake manifold and/or the air cleaner. The direction of airflow through the system depends on the variations in crankcase pressures at different phases of engine operation. The arrows on the diagram indicate the airflow directions when the crankcase pressure is either positive (above atmospheric) or negative (below atmospheric).

Fuel Vapor Control Fuel vapor is harmful. It is released from gasoline at low ambient temperatures. Fuel is stored in underground tanks in order to reduce vapor formation. However, during a fill-up or when fuel is in the tank, vapor can escape into the atmosphere. Preventing vapor loss during fill-up is difficult to control. Modern vehicles are fitted with fuel systems that prevent vapor loss from the vehicle.

Fuel tank cap

Evaporative Emission Control System This evaporative emission control system (EVAP) has a sealed tank and fuel lines. It is vented for expansion and uses a charcoal or carbon filter canister. The filter forms a barrier between fuel vapor in the system and atmosphere. Air can pass through but the fuel vapor is trapped. In order to prevent the filter from becoming saturated it is purged by drawing air through the filter in the opposite direction.

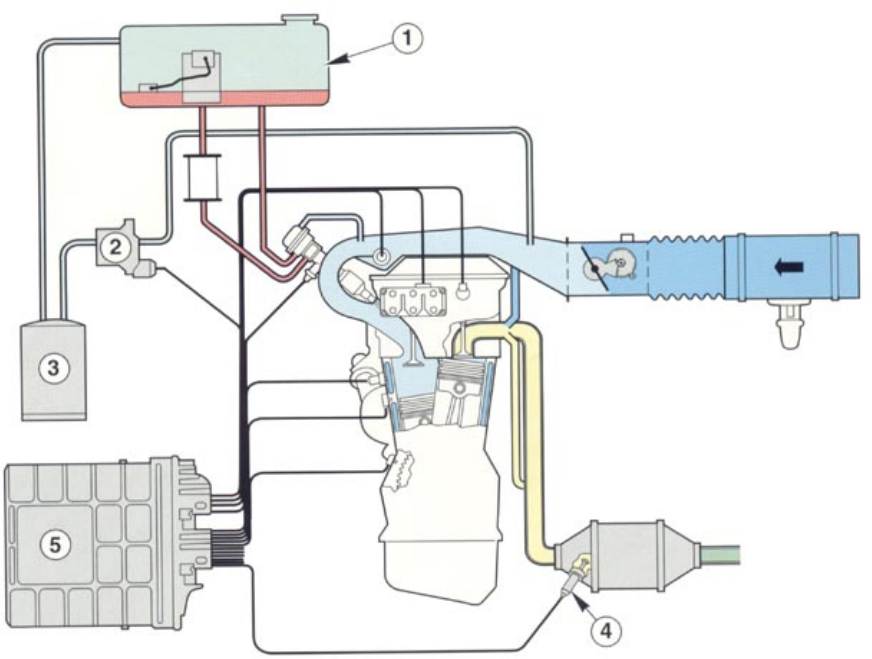

EVAP system[1]

EVAP Operation The air collects the deposited fuel vapor and carries it through pipes into the inlet manifold and engine where it is burnt. To prevent vapor loss when the engine is not running, a canister purge control valve is fitted into the fuel vapor line. The valve is closed when the engine is stationary and during warm up. When the engine is at normal running temperature the valve opens and the inlet manifold vacuum is able to create airflow through the canister. This draws vapor out of the filter and into the inlet manifold.

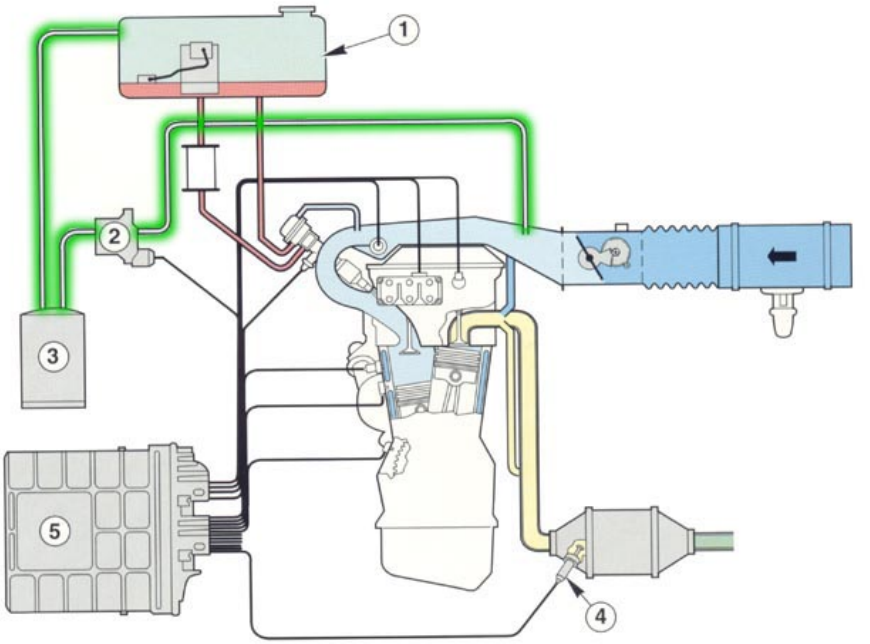

EVAP details[1]

Vacuum Purge The vacuum purge is operated by a thermostatic vacuum switch, fitted in the engine coolant. Alternatively, it is actuated by a solenoid valve and the engine ECU, based on engine temperature. The purge vacuum is applied once the engine temperature has risen to about 50oC. The vacuum, when applied to a diaphragm valve, opens the route to the intake manifold for the evaporative canister.

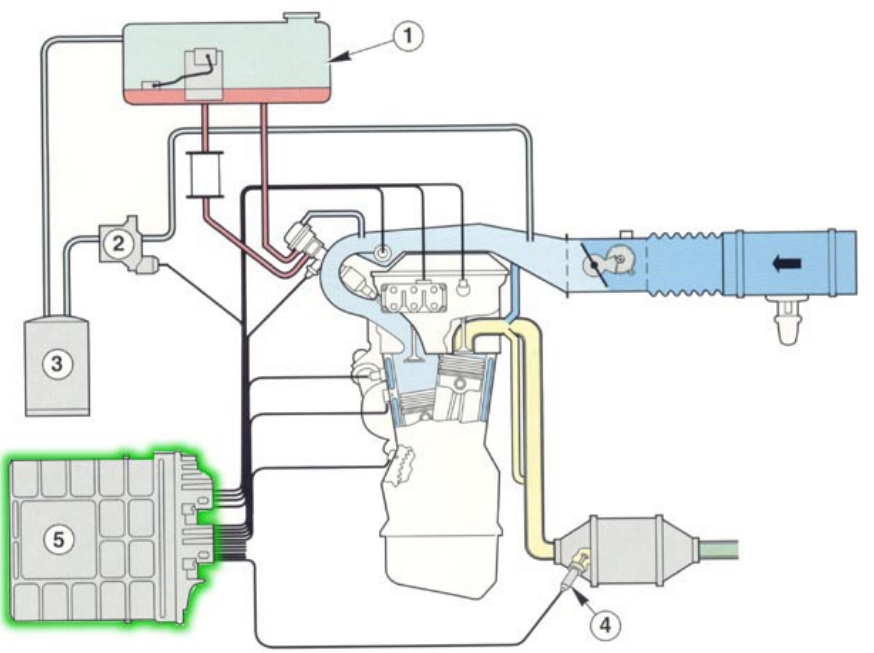

ECU operates the valve[1]

Evaporative Canister The evaporative canister can be fitted in almost anywhere in the vehicle. It may be near the fuel tank, in the engine compartment, or under a body panel Expansion traps are fitted in the vent pipes to catch excess fuel volume from hot weather expansion. Fuel traps are also fitted to prevent fuel loss if the vehicle turns over in an accident.

Charcoal canister

Exhaust Gas Re-Circulation Exhaust gas recirculation (EGR) has become a common feature on gasoline and diesel engines. The addition of exhaust gas to a fresh air and fuel charge lowers the combustion temperature and reduces the formation of nitrogen oxides (NOx). EGR operates during normal engine temperature and high vacuum conditions.

EGR Valve Exhaust gases are piped from the exhaust manifold to the inlet manifold through a vacuum or electronically operated valve. On simple systems, a vacuum is applied to the EGR valve through a thermostatic switch fitted into the engine coolant. Inlet manifold vacuum is applied to a diaphragm in the EGR valve. Attached to the diaphragm is the stem of the valve, which opens internal ports to allow exhaust gases to flow.

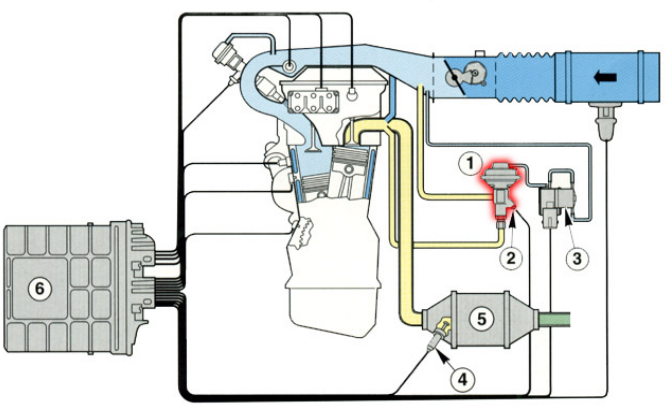

Recirculation valve[1]

EGR Valve Designs According to the year of manufacture and type of engine management system, either negative back pressure, ported or linear valves are used. The amount of exhaust gas recirculated into the air supply is usually less than 15% of the total charge. However, where closed-loop control is employed, up to 50% can be used, under some conditions, on diesel engines. Some systems use a one-piece electrical solenoid valve, others use a separate electronic vacuum regulator and valve. Many have a switch fitted above the valve so that the ECU is able to monitor its opening performance.

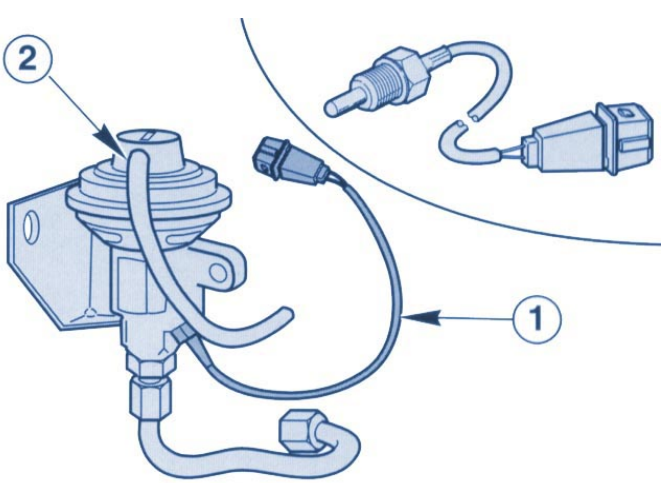

Valves[1]

Describe the operation of an EVAP system.

Read the previous section again and note down some key bullet points here:

-
-
-

Turbocharging and Supercharging

Turbochargers and Superchargers Supercharging is a method of increasing the performance of gasoline and diesel engines by boosting the air charge with an air pump. The most popular method is turbocharging because it uses some of the lost energy in the exhaust gas flow. Supercharging is not strictly an emission control device but rather a method by which an increase in power and fuel efficiency can be obtained from a smaller engine. At the same time, there are improvements in exhaust emissions.

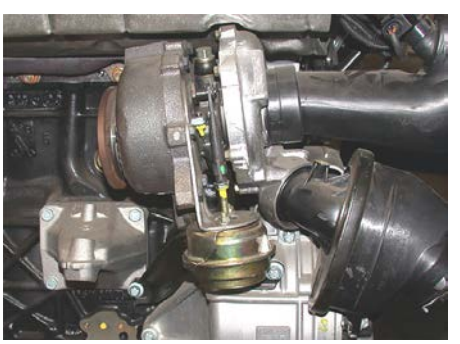
Turbocharger

Supercharger

Forced Air Induction Forced air induction has advantages over natural aspiration, because cylinder charging is more consistent over the full engine speed range. This helps create high torque and power over a wider speed range, improved overall performance, and improved fuel consumption. Greater power from an engine, with only a small increase in weight, improves the engine and vehicle power to weight ratios. Superchargers are driven from the engine crankshaft. Engine power is therefore used to drive the charger.

Turbocharger

Turbochargers Exhaust turbochargers use waste energy in the exhaust gas flow for power. This method of air boost charging is suitable for all types of engine. However, applications on small gasoline engines are usually found only on high performance vehicles.

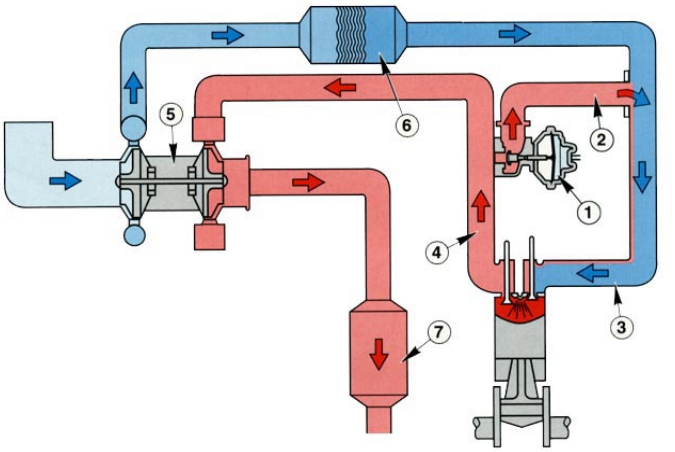

Air and exhaust flow1

Exhaust Gas Energy Turbochargers use the energy in the exhaust gas to drive a turbine. The turbine is connected by a shaft to a compressor wheel in the engine air intake tract. The greater the flow of exhaust gas, the greater the speed of the turbine and compressor wheel, and therefore the amount of additional charging.

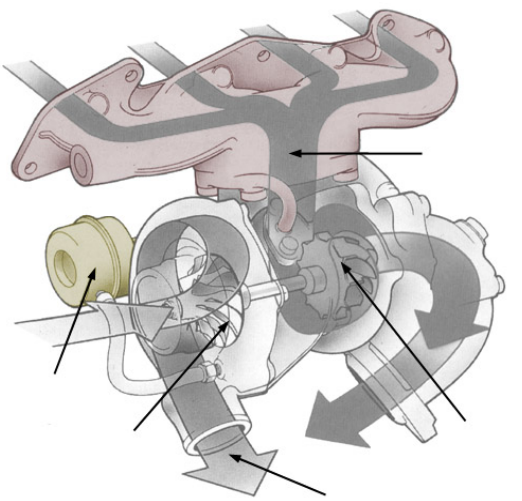

Turbo operation2

Boosted Air Pressure The boosted air pressure is from 0.2 to 0.9 bar, depending on compressor speed. The maximum boost pressure is regulated by splitting the exhaust gas stream so that the excess gas flow and energy bypasses the turbine through a waste gate. The waste gate is a pressure operated poppet or plate valve, which normally remains closed.

Waste gate actuator

Waste Gate When the boost pressure in the inlet air stream rises, it is applied to the waste gate valve. The pressure acts on a diaphragm connected to the waste gate valve and when it reaches the maximum operational pressure, the valve opens. This allows exhaust gases to bypass the turbine. With the reduced gas flow, the turbine and compressor slow down, the pressure reduces, and the waste gate closes. This opening and closing cycle maintains the boost pressure within operational limits.

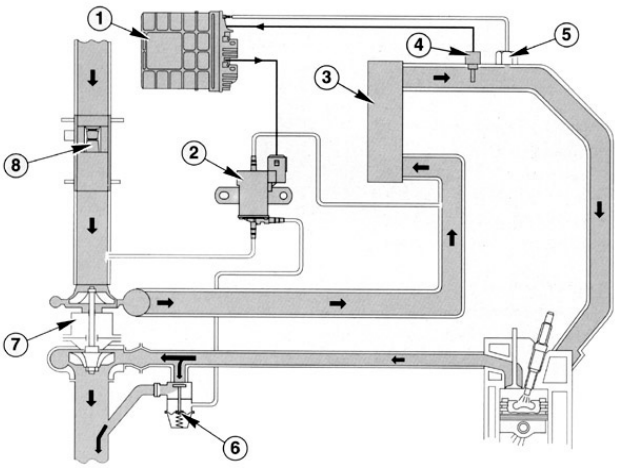

Boost control system3

Turbine and Compressor The turbine and compressor fan wheels are radial flow types. The exhaust flows towards the center and then out. The inlet air flows in at the center and out to the engine air intake duct. The air is forced out by the rotary centrifugal action of the compressor wheel. Air and gas flow is directed by spiral ducting in the turbocharger body. The spindle carrying the turbine and compressor wheel is mounted on special bearings with forced feed oil lubrication. This allows rotation with a minimum of metal-to-metal contact.

Turbine blades

Oil Feed The oil feed comes from the engine main oil gallery and then returns to the oil pan. The lubricating oil is used for cooling in the turbocharger. Lubricating oils that meet turbocharging specifications must be used. These oils have the ability to withstand the high temperatures of turbocharged engines without breaking down. If this occurred, it would deposit lacquer in the turbocharger bearings and elsewhere in the engine.

Oil pipe connections to the turbocharger

Switching Off and Intercooling Turbochargers must be allowed to slow down and cool down before switching off the engine. This usually requires about 30 seconds to a minute. The charged air increases in temperature through the turbocharger and becomes less dense and of lower mass. In order to overcome this loss, an intercooler is often fitted between the turbocharger and the inlet manifold. The intercooler is similar in construction to a coolant radiator but is an air-to-air heat exchanger.

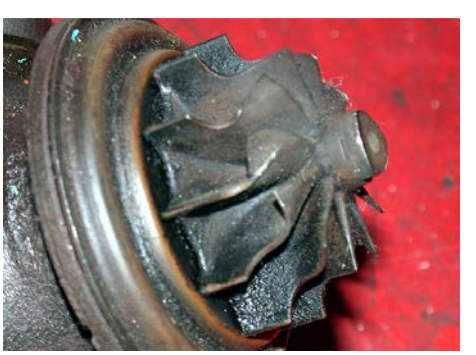
Damaged turbo!

Superchargers Superchargers are usually a Roots blower or radial flow type. The radial flow types are similar to the compressor on the exhaust turbocharger. However, they are driven by belts and gears from the engine crankshaft. Vane type radial superchargers have been used but are less popular.

Twin Roots blowers2

Roots Blower The Roots blower uses two or three lobe intermeshed rotors to pump air. The rotors have helical rotor vanes to reduce noise and improve efficiency. The rotor vanes are driven and matched together with a pair of gears, so that they rotate with each other. They run on ball or needle roller bearings at each end of the rotor spindles. They must be lubricated with high performance grease or synthetic oil in the bearing cases.

Integrated Systems The air intake, exhaust and emissions systems are integrated with other engine systems. All these systems work together to minimize environmental pollution, and to reduce noise and vibration in the vehicle. This is good for the environment and enhances passenger comfort.

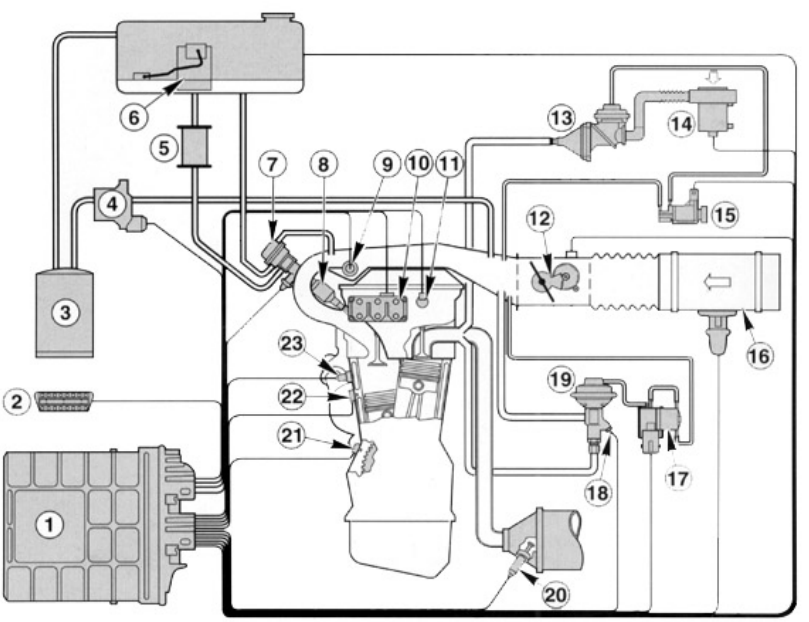

Integrated Systems1

Explain the difference between super and turbocharging.

Read the previous section again and note down some key bullet points here:

-
-
-
-

Catalyst Systems

Introduction There are many devices and systems that are used to control the constituents of the exhaust gases and vapor emissions from engine oil and fuels. One or more of these systems will be used. The actual systems chosen by a manufacturer are suited to particular engines and the environmental protection regulations currently in force. The main systems are described in this learning program.

Catalyst A catalyst is a substance that will cause chemical changes in other substances without changing itself. The purpose of the catalyst is to change potentially harmful chemicals in the exhaust gas into harmless water vapor, carbon dioxide, nitrogen and oxygen.

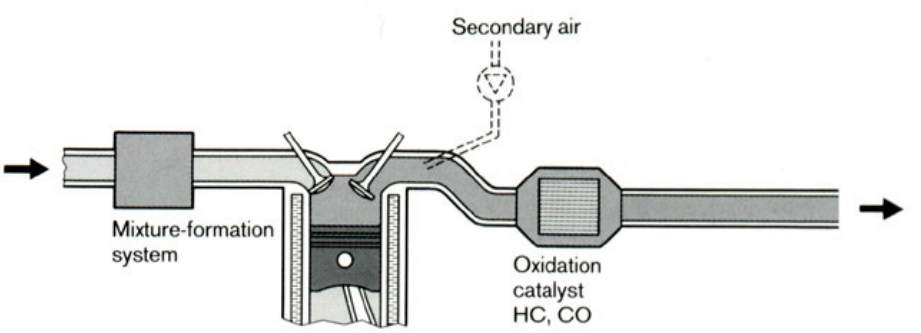

A catalytic converter system[3]

Catalytic Converter A catalyst is a substance that will cause chemical changes in other substances without changing itself. The purpose of the catalyst is to change potentially harmful chemicals in the exhaust gas into harmless water vapor, carbon dioxide, nitrogen and oxygen.

Catalytic Material The catalytic material is applied as a thin coat to a ceramic or stainless steel 'honeycomb' or pellets. The exhaust gases flow freely through the honeycomb or pellets, where the catalytic chemical reactions take place. The operating temperature of the catalyst is high and the catalyst has to be heated before it becomes effective. Exhaust heat is used to do this. Catalysts allow chemical reactions to take place at significantly lower temperatures than might otherwise be required.

Honeycomb substrate

Steel substrate

Oxidation Catalysts Oxidation catalysts require surplus oxygen in the exhaust gases for use in the conversion of hydrocarbons (HC) and carbon monoxide (CO) to water (H_2O) and carbon dioxide (CO_2). Oxidation catalysts are suitable for engines that run with a surplus of oxygen, such as diesel engines.

Three-Way Catalysts Three-way and three-way oxidizing catalysts convert the HC and CO to H_2O and CO_2 and also reduce the nitrogen oxides. In these catalytic converters, the nitrogen oxides react with carbon monoxide to create nitrogen (N) and carbon dioxide (CO_2). The nitrogen oxides also react with hydrogen to create nitrogen and water vapor. The performance of catalytic converters relies on the correct exhaust gas constituents being produced. Modern engines use an electronic closed-loop control with a lambda sensor in the exhaust manifold. This measures the amount of oxygen in the exhaust gas.

Lambda Sensor The lambda sensor is named after the Greek letter lambda. It is used as the symbol for a chemically correct air to fuel ratio or stoichiometric ratio of 14.7 parts of air to 1 part of fuel. This sensor is also known as a heated exhaust gas oxygen sensor (HEGO) when it is pre-heated. The sensor measures the presence of oxygen in the exhaust gas and sends a voltage signal to the engine electronic control module (ECM).

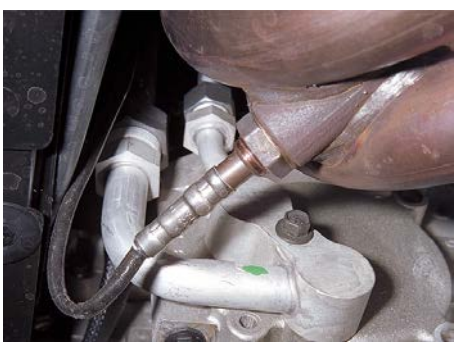
Heated exhaust gas oxygen sensor

Lambda Control More fuel is delivered when oxygen content is detected and less fuel when it is not. In this way, an accurate fuel mixture close to the stoichiometric or lambda ratio is maintained. This produces the correct exhaust gas constituents for chemical reactions in the catalytic converter.

Correct Exhaust Gas Constituents To maintain the efficiency of the catalytic converter, the correct exhaust gas constituents are required. In addition, leaded fuel must not be used. The engine tuning, for ignition and fuel delivery, must be accurately maintained. The engine should not be turned on the starter or by towing for longer than is normal for starting. After this time, unburnt petrol can enter and damage the catalyst where it ignites as the engine finally starts. Running the engine with a misfire will also produce an excess of unburnt fuel. The fuel will burn in the converter and produce considerably higher temperatures than normal. This can damage the catalyst.

Cold Start and Warm Up During cold start, warm up and during acceleration and at high engine speeds, an engine requires a richer mixture than normal. The exhaust will contain increased levels of unburnt hydrocarbons and carbon monoxide. These harmful gases will escape to the atmosphere on vehicles without a catalytic converter. This will also be a problem during the warm up phase On vehicles with a catalytic converter but without closed-loop control. The catalyst has to reach operating temperature before it functions correctly. This is known as the 'light off' temperature.

Catalytic converter on a vehicle

Complete Combustion During cold start, warm up and during acceleration and at high engine speeds, an engine requires a richer mixture than normal. The exhaust will contain increased levels of unburnt hydrocarbons and carbon monoxide. These harmful gases will escape to the atmosphere on vehicles without a catalytic converter. This will also be a problem during the warm up phase On vehicles with a catalytic converter but without closed-loop control. The catalyst has to reach operating temperature before it functions correctly. This is known as the 'light off' temperature.

Air injection[3]

Air Pump The air injection reactive system (AIR) uses an air pump driven by the engine and air injectors in the exhaust ports. The air pump draws air from the air cleaner. The air is pumped to the air diverter valve, for distribution to the exhaust ports, through a non-return check valve, or returned to the air cleaner. The air diverter valve is an electric solenoid and plunger, operated from the engine electronic control unit (ECU). When the engine is cold or on full throttle, the air is routed to the exhaust manifold and at other times to the air cleaner.

AIR system pump

Pulse Air System The pulse air system uses gas flow pulses in the exhaust to draw air into the exhaust ports through non-return valves. The pulse air system is controlled by the engine ECU and actuated by a vacuum motor and electric solenoid. A simple form of pulse air system has a set of pipes that fit into the cylinder head exhaust ports. It has pipe union connectors at one end and feeds to an inlet valve and air cleaner assembly at the other end. This system works automatically with the pulses created by the exhaust gas. The valves in the inlet box allow airflow into an exhaust port when the pressure wave in the port area is negative.

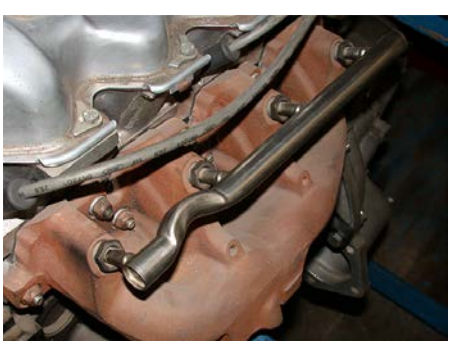
Air pipes in the exhaust manifold

Explain what is meant by 'closed loop lambda control.

Read the previous section again and note down some key bullet points here:

-
-
-
-

Service and repair

Routine Maintenance

Service Work Scheduled service requirements for the mechanical components on modern engines are limited to look-and-listen observations for security of components, for oil, coolant and gas leaks and for abnormal noises. These items have been covered in the preceding section dealing with engine mechanical performance. Other items of service work such as changing the engine oil and filter and replacing or adjusting components on other systems are covered in the appropriate learning programs.

Engine service work is simple but important

Manufacturer Data At the time of service, obtain data from the vehicle manufacturer's service schedules for the work to be carried out at mileage or time interval.

Correct data must always be used

Service Intervals Older type engines with adjustable valve clearances usually specify checking and adjustment at major service intervals. Engines with toothed camshaft drive belts specify adjustment and condition checks at major service intervals and replacement at longer intervals. These checks and belt replacement intervals should be carefully followed.

Checking clearances

Incorrect Adjustment Incorrect adjustment by as little as 10 percent above or below the specified tension can reduce the belt life by as much as 90 percent. A tight belt can cause breakdown of the fabric structure of the belt and wear on the camshaft and tensioner bearings. The consequences of belt failure can include severe damage to inlet and exhaust valves and piston crowns when they smash together as the crankshaft and pistons run on and the camshaft and valves stop moving. Follow the vehicle manufacturer's service schedules for the work to be carried out.

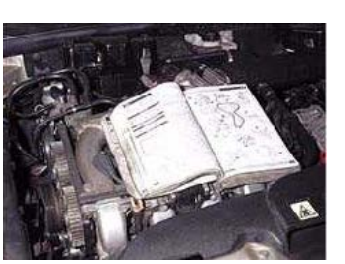
Follow the vehicle manufacturer's service schedules

Correct Grade and Type of Oil In countries where extreme summer and winter temperature are experienced, different grades of oil are required for seasonal use. Failure to use the correct grade and type of oil for the season can lead to difficult starting and premature engine wear. Any faults found during service inspections should be reported to the customer or driver to obtain authority for repair of the fault.

Use the correct oil

99. Worksheet: **Adjust Valve Clearances**

Using feeler gauges

Adjust valve clearances on OHV engine (not hydraulic). Adjust valve clearances on rocker arm type OHC engine.

Correct Valve Clearance Valve clearance is important for two reasons. The first is to ensure that the valve fully opens and is able to fully close in time for the four-stroke cycle. Valve clearance that is too wide will give late opening, early closing and the valve will not open fully. Valve clearance that is too tight or where there is no clearance will cause the valve to open early, close late and may not be fully closed.

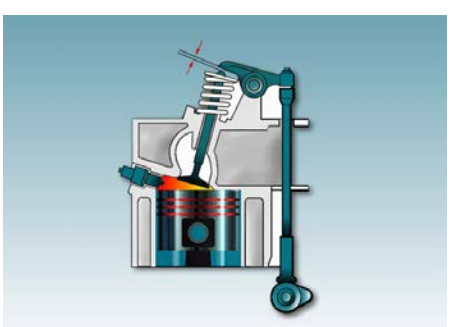
Clearance

Rapid Wear Failure to seat correctly will cause rapid wear from high exhaust gas temperatures acting on the valve head and valve seat.

Valves in position

Tight and Loose Valve Clearance The second reason for correct valve clearance is the requirement to maintain an oil film on the valve train components. Valve clearances that are too loose will allow the components to separate and come together with a hammering effect, which will break through the oil film. Where the clearances are too tight the oil film will not form. Both these situations will cause premature wear from a lack of correct lubrication.

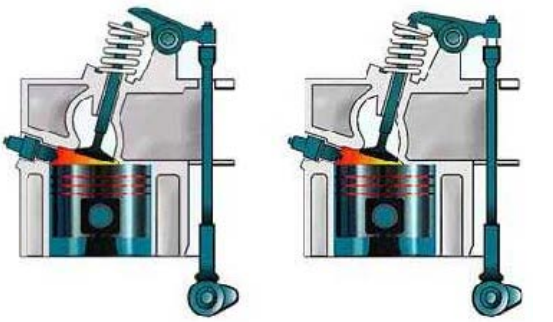

Valve clearances must be correct

Valve Clearance The symptoms of loose valve clearances are a tapping noise from the rocker cover and a slight loss of engine performance. Tight valve clearances cause misfire, uneven running and loss of performance.

Valve Clearance Dimensions Obtain from the manufacturer's workshop manual the specifications and checking conditions for the valve clearances. Inlet and exhaust valves often have a different clearance dimension. Some manufacturers specify that checks and adjustments are carried out when the engine is hot, some when the engine is cold and others hot and running.

Check data

Checking Valve Clearance For all types of adjustable clearances, follow the manufacturer's instructions in regard to the position of the engine when checking any individual valve.

OHV engine

Cam Position The check is usually carried out when the follower is on the back of the cam. To set this position (which cannot be seen directly) requires setting an opposite valve to a point where it can be seen, which is when a valve is fully open.

Adjusting Valve Clearance Remove the rocker cover, rotate the engine and observe the action of the valves as they open and close. Different sequences occur for different engine designs. Set an opposite valve to position and check the valve clearance with a feeler gauge. If the clearance is incorrect adjust by releasing the lock nut and turning the adjusting screw until the correct clearance is obtained. The ‘feel’ of the feeler gauge should show some resistance but still be free when pushed in and out in the gap.

Tappet Noise Continue to turn the engine to each valve position. Check and adjust the new valve if necessary until all of the valves have been checked. Then run through once more, recording that all valves are correctly adjusted. Make sure that inlet and exhaust valves are correctly adjusted to their own specification. Run the engine and listen for tappet noise and uneven running. If these are not heard, the adjustment is correct.

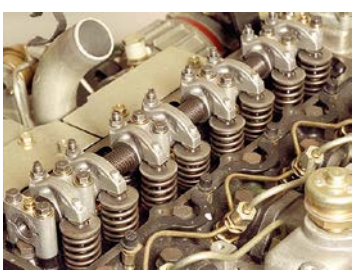

Valves and rockers

Dial Test Indicator On engines where wear between the rocker and the valve stem makes it difficult to obtain an accurate measurement with a feeler gauge, set up a dti (dial test indicator) to measure the movement of the rocker immediately above the clearance measurement position.

100. Worksheet Replace Camshaft Toothed Drive Belt

It is very important to follow the manufacturer's instructions for the replacement of a toothed camshaft drive belt.

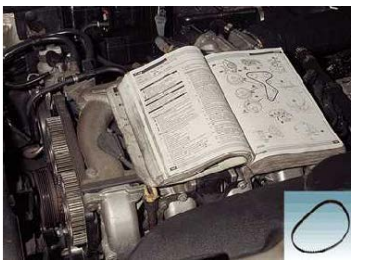

Check data

Timing Marks The engine must be correctly timed so that the valve opening and closing and the ignition spark occur at the correct points in the four-stroke cycle. Marks are provided on the engine and the belt pulleys, which must be aligned before the belt tension is released and the belt removed. The engine must be brought up to the timing marks in the normal direction of rotation of the engine to avoid setting to 'one tooth out' on the slack side of the belt.

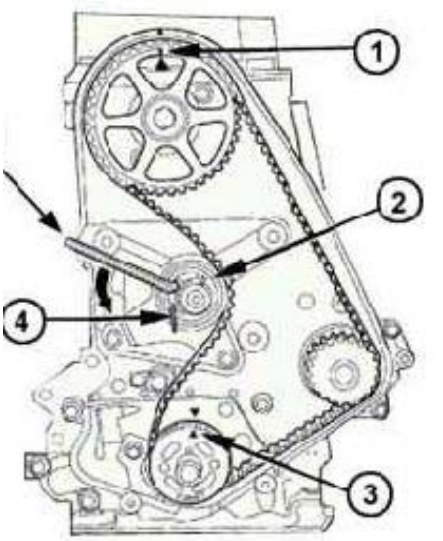

Cam belt

Cam Belt Replacement Other engines use dowels or plugs that have to be inserted through holes in the cam pulleys and into the engine. These hold all shafts in position during the belt change. Oil leaking onto camshaft drive belts will cause premature failure. Lip type oil seals are used on the camshaft and the crankshaft to retain oil in the engine. These are likely to leak at high engine mileage and should be replaced during a cam belt replacement task if they show signs of deterioration.

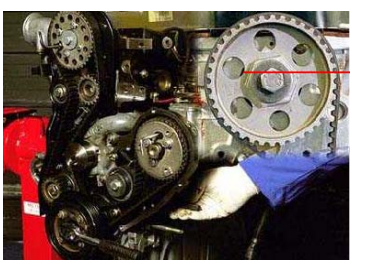

Timing belt

Drive Belts The direction of rotation of drive belts must be kept once they have been fitted. The internal structure of the belt reinforcing plies settle after running in. Reversing the direction of rotation will pull against this 'settled position' and tooth fracture is likely. Many belts are marked with arrows for the direction of rotation. If no marks are shown and the belt is to be reused, mark the belt before removal.

Direction arrow

Adjusting Belt Tension Adjustment of belt tension is specified by the engine manufacturer and will often require the use of a tension gauge. Always observe the checking conditions and procedure for this operation. When no instructions are available, a rule of thumb is to set the tension on the long side so that the belt can be twisted through 90°. When inspecting a belt for condition, look for signs of cracking between the teeth, for frays and perishing of the rubber and, if the belt has been removed, look for signs of twisting when the belt is held up.

Tensioner

Servicing Scheduled service requirements for the engine ignition system consist of checks on the condition of components and on the performance and operation of the engine.

101. **Worksheet** Routine maintenance inspections, lubrication and replacement of parts.

Ignition maintenance is not required at all service intervals, but a quick inspection of the visible components and a check for misfire or uneven running should always be carried out. This should be checked when the vehicle has a fault-code readout system.

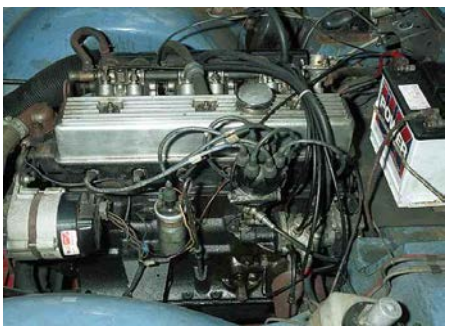
Early ignition system

Electronic Systems Early distributor electronic systems require inspection of the inside of the distributor. They may require lubrication of the distributor spindle and the timing advance mechanism by applying oil through a hole below the rotor arm. Check that the anti-flashover shield is in place and in good condition. This is used to protect and insulate the pulse generator from high-voltage arcing between the rotor arm and distributor cap segment terminals.

Secondary Circuit An inspection of the secondary circuit wires, terminals, distributor cap, and rotor arm is required on all ignition systems. These components are liable to deteriorate over time and may need to be changed. At the same time, look closely at other rubber compound components such as vacuum hoses for signs of deterioration. Change any components that are showing cracks or softening from wear or oil contamination.

Spark Plugs Remove and inspect then refit or replace the spark plugs. Manufacturer's data will specify when plugs should be renewed.

Ignition Timing The final checks should ensure that the ignition timing is correct both at the basic setting and at one or two positions on the advance curve. Check these against the manufacturer's specifications using a stroboscopic timing light and an engine-speed tachometer. Remove or leave the pipe to the vacuum module depending on the specification. Connect and disconnect the vacuum pipe and observe the change in ignition timing to check that the unit functions correctly.

Road Test Check the ignition function during a road test. Check the engine on a light load and under power for uneven running, misfire, hesitation, and pinking. Recheck and rectify any faults found.

102. **Worksheet** Inspect electronic system primary- and secondary-circuit components and adjust ignition timing.

Pulse generator

Remove the distributor cap and anti-flashover shield in order to inspect the pulse generator for signs of physical damage. It is unusual to find any damage, except when the distributor spindle bushes are worn. Check the advance mechanism by twisting the rotor arm in the normal direction of rotation and allow it to spring back.

Stroboscopic Timing The timing is adjusted using a stroboscopic timing light. The advance mechanism can be checked at the same time. Remove or leave the vacuum pipe on in accordance with the manufacturer's specifications.

Secondary-Circuit Components The inspection of secondary-circuit components is visual except when a fault is suspected. Look for signs of early deterioration such as a breakdown in electrical insulation, which can lead to shorting of the high voltage to ground. This can occur at any point between the coil and the spark plugs.

HT Cables Most of the secondary circuit terminals are a push fit, which rely on a spring clamping force between the coil and plug wire connectors and the coil, distributor cap, and the spark plugs. A loose connection will cause premature wear of the spark plug, a misfire, uneven running or hesitation. These faults can be so slight that they are often difficult to diagnose. Check the resistance of a plug cable with an ohmmeter. Values vary, but 10,000 to 20,000 ohms is a good guide.

Rotor and Cap Look at the coil top, inside and outside of the distributor cap, – and at the rotor arm for signs of cracks, tracking, and oil or water contamination. Clean these components with a cloth and spray with a water repellent. Look at these components again with the engine running to see if any visible arcing occurs.

Check the condition and security of all of the secondary circuit wires.

103. **Worksheet** Inspect, clean or renew and gap spark plugs.

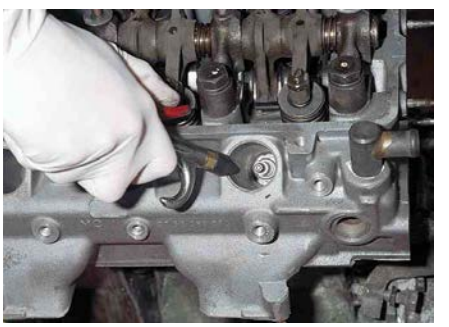
Clean the plug recess before removal

It is common for dust or particles of fine grit to accumulate in the recess where spark plugs fit into the cylinder head. This should be blown out before removing the spark plugs.

Spark Plug Threads While removing the plugs, check that the threads run freely. Clean any threads that are tight, as these will affect the tightening torque of the replaced plug.

Spark Plug Inspection Lay out the plugs in order after removal so that they can be identified with the cylinder for any diagnosis that may be indicated by the plug tip condition. The condition of the plug tip is a good diagnostic aid for the ignition, fuel, and engine condition.

Keep plugs in order when removed for easy inspection

Typical Plug Faults Some typical spark plug problems are shown in these pictures.

Excessive carbon

Contamination

Spark Plug Conditions Check the thickness of the ground electrode and the condition of the center electrode and insulator nose to see if the plug is reusable. A reduction in the thickness of the ground electrode will allow it to bend in service and open the gap. Burning of the center electrode may be found. Another reason for replacing the plugs is cracking of the insulator nose or excessive deposits on the plug tip and insulator nose of carbon compounds or of lead where leaded fuel is used. Always replace plugs at the scheduled service intervals.

Insulation damage

Setting the Plug Gaps Check and adjust the gap with a wire or flat feeler gauge before fitting. Where specified, use a lubricant on the threads. This may be required with some aluminum cylinder head alloys. Aluminum and steel have a chemical affinity and can become joined by an electrolytic action when they are close together. A graphite or copper grease is sometimes recommended, but check manufacturer's recommendations.

Use a feeler gauge to set plug gaps

Tightening to the Correct Torque When tightening the plug, use a torque wrench to tighten to the manufacturer's specified torque. If no torque data is available, tighten the plug finger tight and then a further 15° for taper-seat plugs and when reusing the washers on flat-seat plugs. For new plugs or washers, turn a further 90°.

Visual Inspections A key part of all routine maintenance at each scheduled service interval is a visual inspection for fuel leaks. This inspection should be carried out with care because fuel leaks carry a potential fire risk to the vehicle and occupants.

Filter Replacement The fuel filter is to be replaced at regular specified intervals. On diesel fuel systems, the water trap in the filter housing is usually drained at every service and the filter element changed at the major service interval. These requirements do vary so check manufacturer's recommendations.

Fuel filter on the vehicle

Service Schedules Check with individual vehicle service schedules for work carried out at long-term intervals. This may include checks on fuel-injector condition, starting-device operation and for diesel engines, the replacement of the fuel injectors and glow plugs.

Check manufacturer's data

Fault Codes Check the engine electronic-control unit for fault codes. Where an on-board diagnostic (OBD) computer link is used, run the standard service checks. Report any faults found during service operations to the owner or driver of the vehicle.

Fault code reader

Fuel Filter The main specified item for regular replacement is the fuel filter. However, inspection of fuel-supply pipes and hoses may indicate that these also need to be replaced before more serious problems occur.

Fuel filter

Fuel system hoses

Exhaust Gas Check exhaust gases such as carbon monoxide (CO) and hydrocarbons (HC) with a gas analyzer. Compare the results with the manufacturer's specifications and environmental regulations. Check for fault codes with an appropriate reader or data link.

Exhaust gas analyzer

104. **Worksheet** Replace and/or clean fuel filters.

Always replace a fuel filter with one specified for the vehicle. Avoid the use of poor quality substitutes as these can lead to problems. For gasoline-engined vehicles, remove the battery ground cable before carrying out this task. There is usually some gasoline spilt during this operation and all safety precautions should be observed.

Disconnect the battery earth

Filter Positions The approach to carrying out this task will depend on the position of the fuel filter. Where the filter is under the vehicle, it will usually be close to the fuel tank and be connected by two rubber hoses sealed with hose clamps. The filter may also be connected with threaded connections at each end. The new filter should be matched to the old one before removal and the direction of flow established from the arrows on the casing.

Filter under the vehicle

Filter in engine bay

Filter Removal If possible, have a helper ready to catch any lost fuel in a suitable container. Undo and plug the feed pipe from the fuel tank to the filter. Always follow this procedure for removal so that the filter does not continue to leak fuel from the tank while it is being removed. A small back-flow of fuel will occur. Catch any fuel lost at this time.

Fuel drainer

Connecting Hoses Undo and remove the other end of the filter and fit the new one with the flow arrow in the right direction. This is with the arrow pointing away from the fuel tank. Replace the connecting hoses if these show any signs of deterioration. Check the tightness of the hose clips a second time after fitting as a safety check to prevent missing this important part of the task.

Filters are directional

Air Supply The air supply should provide sufficient clean air for complete combustion of the fuel that has been delivered during the induction stroke. Any restriction in the air supply, due to a blocked air cleaner element or other obstruction, will give abnormal exhaust gas readings. Always check the area in front of the air intake duct to see that there is nothing blocking the airflow.

This air filter needs replacing!

Preheating Preheating the airflow for carburetor and single point injection systems reduces the amount of harmful exhaust gas emissions during the engine warm up phase. A quick observation of the operation of the control flap in the air cleaner intake duct, when the engine is cold and again when hot, is all that is needed to see that this essential component is working.

Exhaust Gas Leaks A blocked or defective exhaust system can cause uneven running and lack of power. Exhaust gas leaks from the manifold or front pipe can produce a screech, similar to the sound of a slipping drive belt. Exhaust gas leaks can enter the passenger compartment and make the driver and passengers drowsy. These may not be easily detected but are potentially harmful. It is therefore important to check for exhaust leaks very carefully.

Catalytic Converter Checking the operation and performance of a catalytic converter is a regular scheduled service. The procedure should be described in the workshop manual or other data book for the actual vehicle being inspected. When the catalytic converter is part of an engine management system, with closed loop control of fuel delivery, an exhaust gas analyzer with voltage measurements for the lambda sensor is used.

Lambda sensor

Air Injection Systems Air injection systems are used to add oxygen into the exhaust flow when the engine is operating on a rich mixture. This happens during warm up and acceleration. The control system will be set for one or both of these conditions, depending on the vehicle and other fuel delivery management methods. These systems should be checked in accordance with the manufacturer's instructions and specifications.

Air injection pipes

Crankcase Ventilation Inspection and cleaning or replacing of the filter and oil separators in the crankcase ventilation system is important for correct operation. This will also prevent oil leaking from the engine. Although the frequency of crankcase ventilation system inspection is at high mileage or yearly intervals, it is important to look for symptoms during all service operations. Checks for correct operation of the EVAP and EGR systems will usually be required when faults are detected, but they should be considered whenever a misfire or uneven idle is found.

Oil separator connected to the crankcase

Supercharger and Turbocharger Service Supercharger and turbocharger service requirements are for security, leakage, and condition of the units, connecting pipes, control devices and drive belts or gears when fitted. Report any abnormality to the owner or driver of the vehicle.

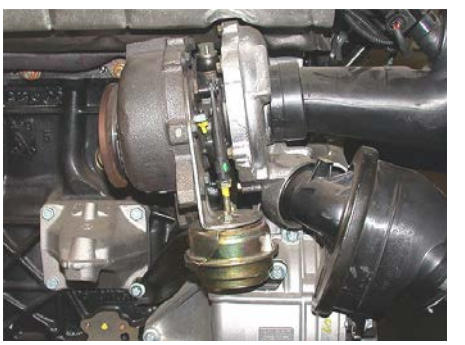
Turbocharger

Lubrication Requirements There are few lubrication requirements other than linkages and pivot points, and these are specified by the vehicle manufacture. Parts replacement includes the air cleaner element and crankcase ventilation filters. At longer service intervals, the ventilation system will require cleaning and replacement of rubber hoses. In some cases, the non-return valve between the inlet manifold or air intake and the crankcase will need replacing. Any other work will be specified by the vehicle manufacturer.

Lubrication is important

105. **Worksheet** Replace air cleaner element - clean dust/dirt from air cleaner housing and ducts.

A dirty air filter!

Carefully open the air cleaner housing and remove the element. All modern vehicles use a micro-porous paper element, which can be cleaned at half-service intervals by reverse blowing with an airline. Do not blow into the paper, as this will compact any dust particles and block the element. Use a vacuum cleaner or damp cloth to remove all the loose particles of dirt that accumulate in the housing and duct pipes.

Replacement Filter Element Check that a replacement filter element is correct for the vehicle and that it matches the dimensions of the one being replaced. Do not force an oversized element into the air cleaner housing. This can damage the housing and/or distort, creating an open section where unfiltered air can flow into the engine.

Air filter and housing

106. **Worksheet** Inspect and clean PCV components - check security of all hoses/valves/filters etc.

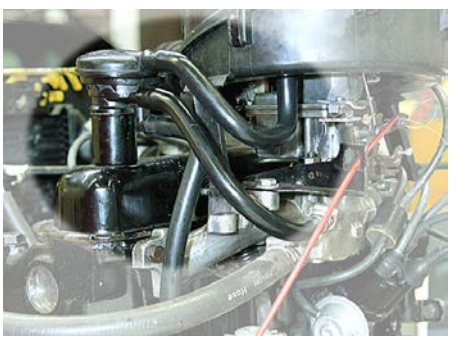
Crankcase ventilation system

There are many variations on positive crankcase ventilation systems. Following the manufacturer's instructions for checking, cleaning and replacement of parts is advisable. Because the time intervals are long, it is important that this work is not missed. Where it appears as a customer option, it is advisable to complete the work at three to four year intervals.

Crankcase Ventilation System One common point with all systems is ensuring that there is no blockage. This can occur because of lacquer build up when oil changes have not been carried out at the correct service intervals. Any blockage in the system increases the risk of oil leakage from the engine and high oil consumption. Any vehicle that has blue smoke visible in the exhaust should have the crankcase ventilation system cleaned before any further diagnostic work is carried out.

Inspecting, Cleaning and Replacing the Filter Inspection and cleaning or replacing the filter and oil separators of the crankcase ventilation system are important for oil sealing in the engine.

Components should be cleaned with care

Service Areas The main area of service work apart from the inspections is changing the engine oil and filter.

Oil Condition Looking at the condition of the oil will indicate the existence of problems that may be developing. Black oil can be caused by either a late oil change or could show early signs of piston blow by. Creamy or emulsified oil indicates the existence of water. Report any abnormality to the owner or driver of the vehicle.

Check the oil condition

High Oil Levels If the oil level is found to be high there is a possibility of dilution from gasoline or diesel draining into the oil pan by bypassing a piston from a leaking injector or carburetor valve.

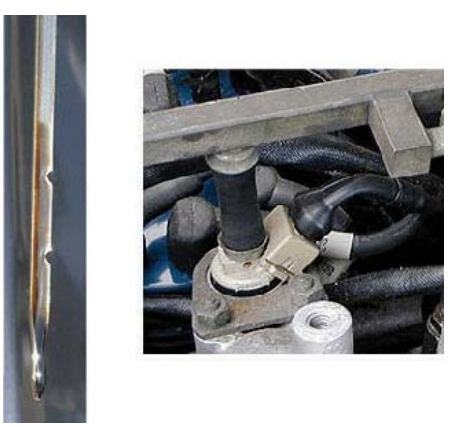

High oil level may indicate another problem

Color and Body of Oil The body and color of old oil at a service interval should be inspected to look for the correct frequency of oil changes and for contamination from water, fuel or dirt particles.

Oil color is a useful indicator of engine condition

Replacing an Oil Filter Replace the oil and the filter at the specified intervals. The service interval is shortened for abnormal use conditions. Refer to the manufacturer's recommendations and discuss these as appropriate with the owner or driver of the vehicle.

Filter replacement

Oil Leaks Check for oil leaks at all possible places. These are at all gasket joints and from the seals on all shafts that extend from inside the engine to the outside. When the engine is running look at the exhaust for signs of blue smoke. This indicates the presence of oil being burnt during combustion.

Oil pan gasket

Smokin'!

Failure of the Crankcase Ventilation System Oil will bypass the pistons where the rings are badly worn and if the crankcase pressure is high due to a failure of the crankcase ventilation system. Oil may also be drawn into the inlet port from worn valve stems and guides and/or valve stem oil seals. Blip the throttle during exhaust smoke observations to see if there is any change during overrun.

Oil Pressure Test There will be occasions when an oil pressure test is advisable at a service interval. This is likely to be when an oil change is overdue or when sludging is found in the engine. Carry out the test after the oil has been changed to check for possible damage or continuing blockage.

Crankcase Ventilation Blockage A blockage in the crankcase ventilation system will cause failure in the operation of that system and give a high crankcase pressure. This can cause premature failure of the oil sealing components, so it is always recommended to check and clean the valves and restrictive orifices in the system at regular service intervals.

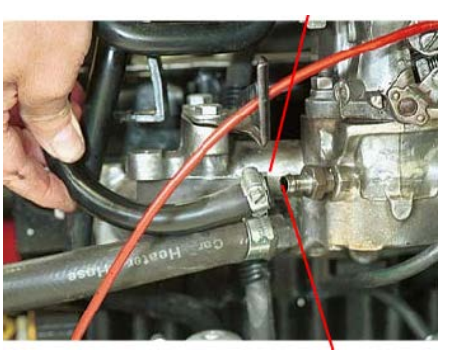

Replace Engine Oil and Filter Follow the procedure for draining and refilling the engine oil and for removing and replacing the oil filter. To select the correct type and quantity of oil, refer to the engine manufacturer's workshop manual or data sheets. Always use the oils formulated for gasoline or diesel engines, although most engine oils show both 'S' and 'C' API ratings.

Simple filter replacement

Replace Engine Oil and Filter Check the oil level and condition and run the engine to warm it up before draining the oil.

Using the Correct Filter Always check that the new filter is correct before fitting. Some canister-type filters have the filter blockage valve in the filter body. Where this type is used it cannot be interchanged with a canister of similar dimensions and fittings, but no valve.

Replacing 'O' Rings Always replace the 'O' rings on the canister or filter bowl. Where filter bowls are used, loosen the through bolt to remove the filter element. Hook out and replace the 'O' rings. Fit the filter, making sure that the base plate and spring are retained and finally twist the bowl on its seat to set the 'O' ring seal.

Use new 'O' rings

Replacing the Drain Plug Replace the drain plug with a new sealing washer and fill the engine with the specified quantity and quality of oil. Run the engine, checking for oil leakage as soon as the oil warning light goes out. Stop the engine to check the oil level.

New plug washer

Overfilling the Engine Do not overfill an engine because this can cause damage by reducing the crankcase air space, which then affects the ventilation system. Damage to engine components from hydraulic action can occur if the level is very high.

Servicing Scheduled service requirements for the engine cooling system consist of checks on its performance and operation. All of the quick checks described in the Checking System Performance section should be completed. Obtain data from the vehicle manufacturer's service schedules for the work to be carried out at any particular mileage or time interval.

Check manufacturers' data

Routine Replacement The main cooling system item for routine replacement is the antifreeze and coolant. Rubber components such as hoses and drive belts are replaced if they begin to show signs of deterioration. A preventative maintenance program would include replacement of hoses and drive belts at, say, a three- or four-year- interval. Report any faults found during service operations to the owner or driver of the vehicle.

Hoses and antifreeze

107. **Worksheet** Drain and top off coolant to prepare for fall/winter conditions.

There are two types of service schedule. Most types are based on mileage and time but some older schedules were based on seasonal requirements. The reasons for seasonal maintenance are still valid and can be used on top of mileage and time service schedules.

Radiator being drained

Seasonal Checks Cooling system maintenance should match the season. In the summer when hot weather is expected, it is important that the system is working efficiently and that checks for leakage and for coolant and airflow through the radiator are carried out. Any problems that are discovered should be reported to the customer, who can authorize you to replace any parts.

Winter Conditions During winter months, the risk from coolant freezing is high. Because water expands on freezing, adequate antifreeze strength is necessary to prevent damage to the engine and radiator.

Draining Coolant Drain the coolant into a clean drain tray and transfer it to a clean can or tank for disposal to an authorized site. The container should be marked to show the contents as antifreeze – ethylene glycol. Never use food containers for this purpose. Follow the vehicle manufacturer's instructions for the method of draining.

Antifreeze Observe the manufacturer's recommendation for antifreeze type and quantity. Antifreeze solutions for year- round use have additives and inhibitors to make them suitable for this type of application.

Check antifreeze regularly

Filling the Cooling System Some engines will fill without problems of air bubbles forming in the water jacket or heater. However, if problems are found, bleed the system in accordance with the vehicle manufacturer's instructions. Where bleed valves are fitted, open these before filling and close them when coolant flows freely. When an engine has to be run to force coolant through the heater, take care to keep clear of rotating components and hot coolant.

Bleed valves in cooling system

Customer Care All faults should be reported to the vehicle owner or driver – together with recommendations for further diagnostic tests or repair work. Always ensure that the vehicle is clean before returning it to the customer.

Remove, Replace, Strip and Rebuild Components

Introduction The abbreviation R&R is short for the removal and replacement of components or remove and reassemble components.

108. **Worksheet** Inspect camshaft and valve timing

Valve Timing Valve timing is correctly set when the timing marks on the two drive gears are aligned with the appropriate marks. A protractor and dti (dial test indicator) can be used to check actual valve opening against valve timing data. Visual inspection of cam wear will usually indicate if the camshaft requires replacement.

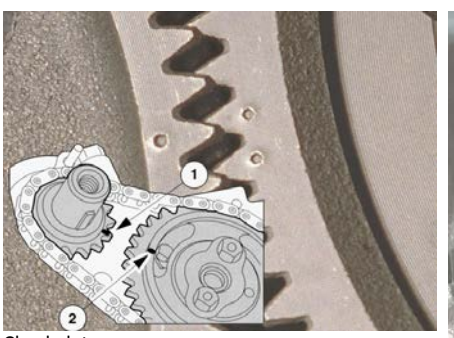

Check data

DTI in use

Correct Alignment and Location Most engines require the engine timing marks to be set and the crankshaft and camshaft gears or sprockets locked in position before the camshaft bolts are undone and removed. Some engines require a sequence for removal and replacement in order to prevent distortion or incorrect location of parts. Accurate timing depends on the correct alignment of timing marks and/or on the location of dowels or on positioning of a cam with a dial test indicator (dti) that has a dedicated mount and plunger anvil. These settings cannot be certain without carefully following the instructions in a workshop manual.

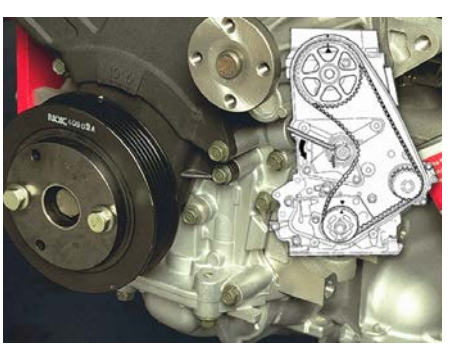
Correct data is essential

Ignition System Components The ignition system components are electrically, electronically, and mechanically operated. The electrical components include the vehicle battery, the ignition switch, the ignition coil, the distributor, and the spark plugs. These are connected with cables and high-voltage insulated wires. The ignition switch generally incorporates a mechanically operated steering lock and switches for other functions.

Distributor The distributor is a mechanically driven unit taking a drive from the engine camshaft at half-engine speed on four-stroke engines. The drive to the distributor is covered in the Engine Mechanical learning program. Inside conventional distributors is a contact breaker switch or pulse generator for primary circuit control and a centrifugal mechanism for ignition advance.

Distributor driveshaft

Conventional distributor

Electronic Spark Advance Electronic ignition systems using an ECU receive input signals from a series of sensors. The ECU processes the data received and then sends switching signals to an ignition-control module or directly to the coil.

Ignition module

ECU

Temperature sensor

Crank sensor

Tools and Equipment The majority of ignition components can be removed and replaced with a spanner wrench or screwdriver. Care must be taken with all components, but especially with electronic components.

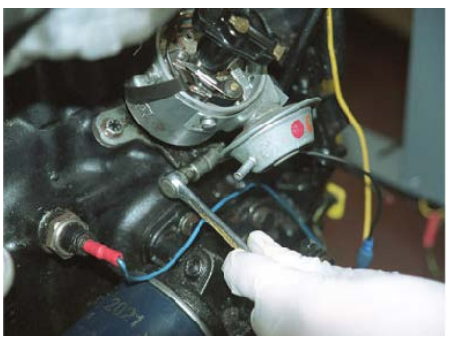
Distributor clamp bolt

Safety First! Disconnect the battery ground cable before removing any electrical connection.

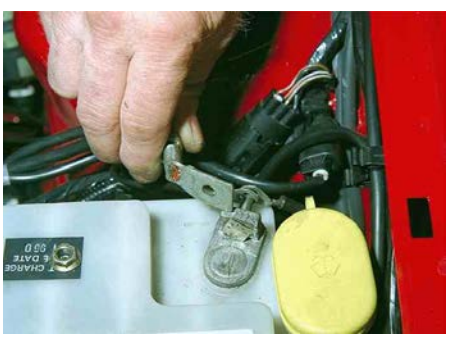
Removal of battery ground cable

Special Procedures Two components require special procedures for removal or replacement. These are the distributor, which must be timed to the engine on reassembly, and the ignition switch, which requires a special technique to remove the shear bolts that secure the switch to the steering column.

Distributor removal

Ignition switch

Electrical Connections All electrical connections must be clean and tight to provide good electrical conduction.

Special Tools There are a few special tools and materials that are used only on ignition systems. Refer to manufacturer's workshop manuals and data books for precise instructions on the applications and uses of these additional tools.

Special tools

High Voltages! Insulated pliers should be used whenever handling live secondary-circuit cables during diagnostic test procedures.

nsulated ignition pliers

Plug Sockets There is a range of spark plug socket wrenches to suit different sizes of spark plugs. These are deep, or very deep, sockets that frequently have a rubber insert to grip the plug and assist in removal.

Plug sockets

Spark plugs

Memory Saver or Keeper A “memory saver” is a useful tool for vehicles that require ECU memory to be kept alive when the battery is disconnected This is a small battery-powered unit that plugs into the cigarette lighter socket and maintains a low current in the circuit. A built-in protective circuit is incorporated into the memory saver to prevent damage if a short circuit is made.

Memory saver

Materials Materials that are used on ignition systems include grease for contact breaker cams, water repellent sprays, and electrical cable and terminals for repair of the primary circuit wiring.

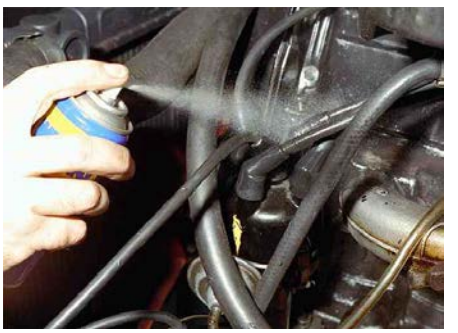
Water repellent

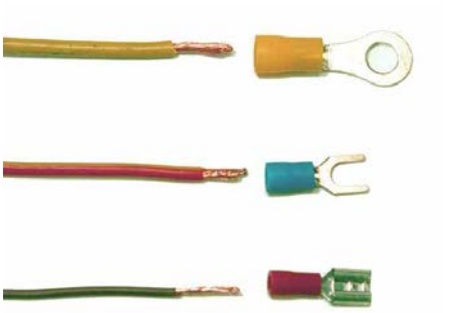
Terminals

HT Leads At one time it was common for secondary circuit leads to be made from a bulk supply of cable and terminals. This is no longer common because of the requirements of radio suppression and spark performance for exhaust emission regulations. Sets of secondary circuit cables are readily available for a wide range of vehicles.

Plug leads

Ignition Modules Whenever ignition modules are mounted on heat dissipating surfaces, a silicon compound is applied between the components to help with heat transfer. This is available as a general product from vehicle component suppliers.

Ignition module heat transfer compound

Timing Marks Turn the engine to the timing marks as the first step after removing the battery ground cable. Before removing the distributor cap, note the position of the No. 1 cylinder spark plug cable. Then, after removing the distributor cap, check that the rotor arm is at the same position. If it is not, the timing marks probably are aligning with the opposite cylinder on the crankshaft, which would be No. 4 for a four-cylinder engine or No. 6 for a 6-cylinder engine. Turn the engine a further full revolution to bring No. 1 cylinder into alignment on the timing marks.

Timing marks

Distributor Removal After identifying and recording the distributor positions, remove the primary circuit cables, vacuum pipes, and distributor cap and plug wires. Push these off to one side. If necessary, undo and remove the distributor clamp bolts and pull the distributor out from its housing.

Remove HT cables

Loosen clamp

Remove vacuum pipe

Withdraw distributor

Distributor Drive Arrangement Check the drive arrangement for a "dog" or gear drive. A dog drive consists of a large and small "D" manufactured as part of the distributor spindle. These only fit one way; replacement is straightforward. However, a gear drive will have to be aligned during replacement and will twist slightly as it meshes with the gear on the camshaft. Allow for this when positioning the spindle for replacement of the distributor into the engine.

Dog and gear drive

109. **Worksheet** Remove and replace electronic distributor – strip and reassemble pulse generator/amplifier module

Remove and replace secondary switching distributor with distributor position, engine speed, and crank angle sensors.

Disconnect the primary circuit or sensor wiring socket, the vacuum pipe (if fitted), and then push the distributor cap and cables off to one side. Undo and remove the clamp bolts and remove the distributor.

Electronic distributor

Electronic Distributor Disassembly To strip the distributor, closely follow the manufacturer's procedures to avoid damage, which can easily occur if parts are forced or removed in the wrong order. An inductive-pulse generator consists of a rotor on the distributor spindle and a stator on the base plate. Some distributors are built as factory units and no spare parts are supplied. Check before stripping to save time on unnecessary work. Where parts are available, the distributor will strip in a similar way to a contact-breaker distributor.

Always check data

Ignition Control Module The ignition-control module or amplifier unit is sometimes fitted on the outside of an electronic distributor. This type of unit is replaced by first disconnecting the wiring socket and then undoing and removing the securing screws. On reassembly, smear a silicon compound between the module and the distributor body to assist with heat dissipation. Ensure that the electrical terminals are clean and tight.

Hall-Effect Distributors Some distributors have a Hall-effect generator inside for engine speed and position sensing. Some do not have mechanical and vacuum advance facilities. In such cases, these functions are carried out in the ECU.

Distributor used for speed, position and HT switching

110. **Worksheet** Remove and replace coil and the primary- and secondary-circuit cables/components.

Removal of the ignition coil is a straightforward task for single coil applications. Label and remove the primary circuit cables and secondary circuit wires to the distributor. Undo and remove the securing screws and remove the coil. When fitting the coil make sure that it is correctly positioned so that the case cannot rub on other components and that the cables do not need to be pulled to reach.

Ignition coil LT cables

Distributorless Systems For distributorless ignition systems, multiple coils or a coil pack are used. Label all cables before removal for correct reconnection. Follow the manufacturer's instructions for locating and securing terminals and terminal blocks.

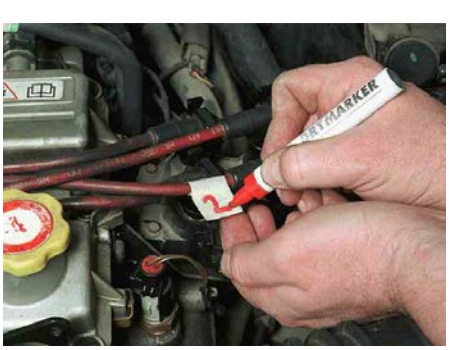
Label leads for easy refitting

Ignition Coils There are a number of different ignition coils, whose external appearance may be similar. However, these have very different internal constructions. Always select a new coil that exactly matches the manufacturer's specifications.

Ignition coils

Ignition Switch The ignition switch should only be removed after first reading the manufacturer's instructions. A typical example requires the removal of the steering column covers, the wiring multi-socket and short section of wiring harness. The shear bolts, which hold the ignition switch and steering column in place, should also be removed.

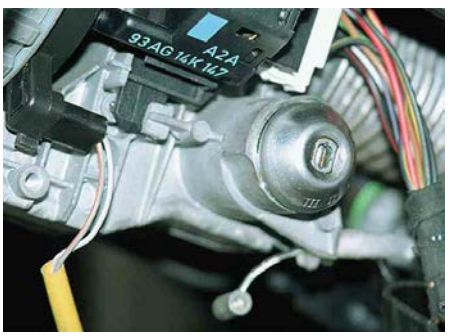

Ignition switch

Steering Column The steering column is usually fitted so that it will collapse in an accident. Therefore, it must be treated with care.

Collapsible steering column

Shear Bolt Removal A shear bolt is a special security bolt with a hexagonal head. The bolt head is used for tightening only because it shears off when a critical torque is applied. These bolts are designed to be difficult to remove, but there are two methods that can be used depending on circumstance. The first is to drill into the end of the bolt and use an extractor tool to undo the thread. The second method uses a center punch and light taps from a hammer to drive the bolt around on the thread.

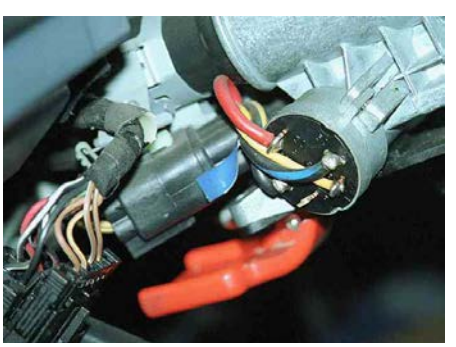

Ignition switch and steering lock

Primary Circuit The primary circuit wiring can be removed and repaired in the same way as other cables are.

Secondary Circuit Secondary circuit wire and component connections are usually push or clip terminals. These will come apart easily. Always grip the terminal and not the wire when pulling apart. When reassembling, ensure all terminals make clean and tight electrical connections to the wires and other components.

Secure HT connections are important

111. **Worksheet** Remove and replace electronic sensors and ECUs.

Follow the manufacturer's workshop data for the location and replacement of electronic sensors and ECUs. These will be in different places according to the type of vehicle and the time of manufacture.

Workshop manual

Sensors Some examples are shown here with the location and securing methods detailed. The first is an engine speed sensor attached to the engine block and aligned to teeth on the flywheel. A similar sensor may be fitted close to the camshaft pulley where it is able to provide a signal based on a 720° rotation of the crankshaft for the four-stroke cycle.

Engine speed sensor

Camshaft sensor

Manifold Absolute Pressure (MAP) Sensor The manifold absolute pressure (MAP) sensor is connected to the inlet manifold with a vacuum pipe and to the ECU through the wiring harness and multiplug terminations. The sensor is mounted inside the engine compartment and often has flexible rubber mountings for protection from engine and vehicle vibration. Some sensors form part of the ECU.

MAP sensor

Knock Sensor A knock sensor, when used, is always fitted to the side of the engine block. To ensure correct operation, it must be tightened in accordance with the manufacturer's instructions.

Knock sensor

Other Sensors Other sensors that may provide data for the ignition function include the engine coolant sensor, intake air temperature, throttle-position potentiometer and, on some systems, a Hall-effect sensor in a distributor.

Throttle position sensor

Temperature sensor

Air flow sensor

Knock sensor

Final Checks ☐ On completion of any ignition repair work, carry out a systematic check to ensure that all parts are correctly located and make good electrical connections. Carry out an engine analyzer or similar test program and, finally, take the vehicle for a road test to ensure that it is in full working order.

Mechanical Fuel-Injection Systems The fuel supply components are the fuel pump, fuel pressure accumulator, filter, primary pressure regulator, fuel distributor, injectors, cold start valve, and fuel pipes. Identify and locate these parts and obtain data for removal, inspecting, replacement, and adjustment.

KE Jetronic system components[3]

Fuel Distributor The fuel distributor and electro-hydraulic pressure actuator (KE Jetronic) are attached to the airflow sensor and should not normally be disturbed. Remove the distributor as a single unit. Plug or cap the ends of pipes when they are removed. After reassembly run the engine, check for fuel leaks and carry out basic idle and mixture adjustments. Use special tools as required and an exhaust-gas analyzer.

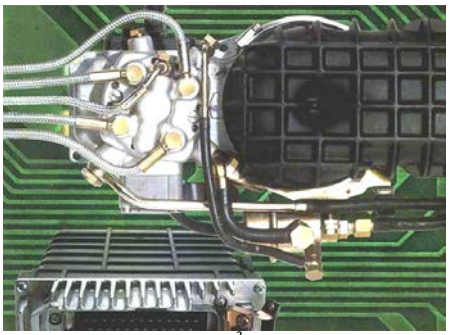
KE Jetronic Fuel distributor[3]

112. **Worksheet** Remove and replace electronic monopoint-injection components.

Monopoint fuel-injection systems are also referred to as single point, center point or throttle-body injection systems. It is important, when carrying out any work on these systems, to work in a clean environment and to carefully follow the engine manufacturer's instructions. The main fuel-supply components are the fuel pump, an in-line fuel filter, fuel-pressure regulator and the injector in the throttle body.

Monopoint injection throttle body

Monopoint Injection Disconnect the vehicle battery before undoing any fuel pipe or hose connections. Clean any parts, and the area around parts, before removal or stripping. Disconnect and cap or plug fuel pipes to prevent loss of fuel and to keep clean. To remove components, undo the securing clamps, screws and union nuts on pipes. Inspect carefully before reassembly.

Disconnect the battery

Air-Supply Components The air-supply components are the air box air-cleaner housing, filter element, ducting, air-temperature sensor and control flap. Also included are the throttle valve in the throttle body, the injector unit, throttle-plate control motor and the inlet manifold. Disconnect the ducting, securing screws, brackets, electrical terminal blocks and any other parts to remove these components. Inspect carefully before reassembly. The monopoint injector unit can be removed as a single unit. It can be stripped for cleaning and replacement of parts.

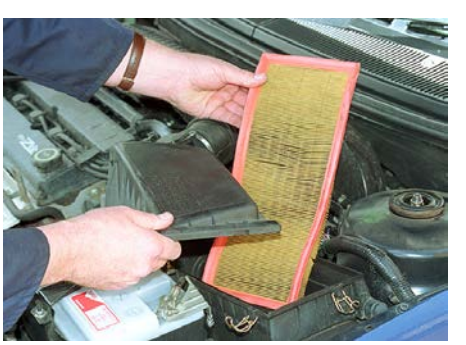
Air filter

Electrical and Electronic Components
The electrical and electronic components are the control relay, electronic control unit (ECU) and sensors. The sensors are for air-charge temperature, manifold absolute pressure, engine temperature, throttle position, exhaust oxygen/lambda, engine speed, and others. To remove and replace these components, follow the vehicle manufacturer's instructions.

ECU

Temperature sensor

Actuators The actuators are incorporated in and on the injector unit. These are the injector and the throttle-plate control motor. Other actuators controlled by the ECU are parts of the emission control systems. To remove and replace these components, follow the vehicle manufacturer's instructions. After reassembly, run the engine, check for fuel leaks and carry out basic idle and mixture adjustments. Use special tools as required and an exhaust gas analyzer.

Monopoint injector

113. **Worksheet** Remove and replace electronic multi-point injection components (sensors ECU actuators/fuel supply).

Multipoint fuel injection systems have injectors in the air-inlet manifold or port. They may also be referred to as port fuel-injection systems. The tests and inspections for electronic multipoint fuel injection are similar to those for monopoint or throttle-body fuel-injection systems. Adapt the procedures given previously for multipoint injection systems. At all times, follow the manufacturer's instructions, particularly for releasing fuel pressure before removal of any fuel-line component.

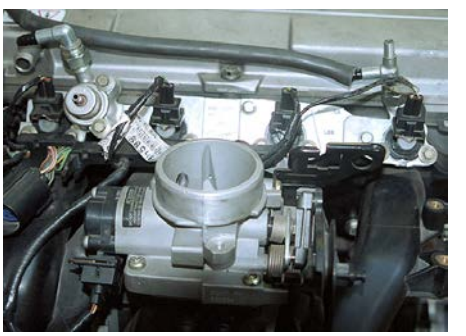
Multi-point injection engine

Multipoint Fuel Injection Multipoint fuel injection varies from monopoint in having a fuel rail to supply the injectors. This is located across the top of the inlet manifold. It is fitted with a pressure regulator, supply, and return pipes. The pressure regulator has a vacuum connection to the inlet manifold. On many vehicles, the fuel rail and injectors, can be removed as a single unit and can be stripped for cleaning and replacement of parts. Follow the manufacturer's instructions for this repair work.

Fuel rail

Pressure regulator

Air-Supply Components The air-supply components are the air box air-cleaner housing, filter element, ducting, air-temperature sensor and control flap. Also included are the throttle valve in the throttle body, the injector unit, throttle-plate control motor, and the inlet manifold. The airflow sensor is not normally used on monopoint injection systems but is used on all but a few multipoint systems. Follow the manufacturer's instruction for the removal and replacement of components.

Airflow sensor

Actuators The actuators, which include the injectors, auxiliary air valve or idle-speed control valve, and the control devices for emission-control systems may be different for multipoint injection systems. Identify, remove, and replace according to the manufacturer's instructions. After reassembly run the engine, check for fuel leaks and carry out basic idle and mixture adjustments. Use special tools and an exhaust gas analyzer as required.

Injector

Idle speed controller

114. **Worksheet** Remove and replace fuel tanks, EVAP, and fuel lines.

There is a real risk of personal injury from spilled or drained fuel that ignites on the workshop floor or in an open drain tray. Use a retrieval tank to empty the vehicle's fuel tank. Always disconnect the vehicle battery before starting work. Clear the work area of possible sources of ignition and issue warning notices. Follow the manufacturer's instructions for use of the drain tank, which includes the connection of a static-electricity safety cable.

Fuel tank drainer

Warning signs

Fuel Tank Work below the vehicle, preferably on a vehicle hoist, to identify the fuel feed and return. Locate the vent and vapor and the filter neck to tank pipes and hoses. Undo the pipe unions or hose clamps and disconnect the pipes or hoses. Where only the pipes or hoses are being removed, plug or cap the ends to prevent fuel leakage. This will also keep the fuel lines clean.

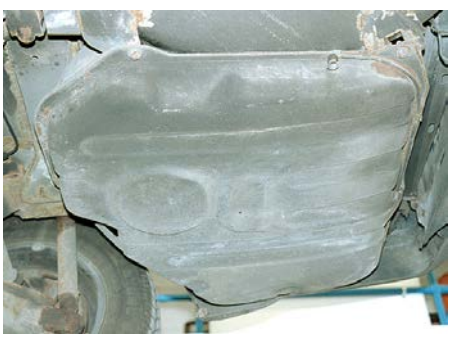
Fuel tank from under the vehicle

Removing the Fuel Tank When removing the fuel tank, disconnect the electrical terminals for the fuel pump and the fuel-gauge sender unit. Obtain assistance to support the weight of the fuel tank. Undo and remove the securing bolts and lower the fuel tank from the vehicle. Remove the fuel gauge and pump. On reassembly, use a new gasket or sealing ring. Once the system is pressurized and running, check again for fuel leakage.

Fuel tank strap

Fuel Evaporative Element The early fuel evaporative element is fitted in place of the manifold to carburetor heat insulator and gasket assembly. It is removed and replaced in the same way. Care is needed to prevent distortion or breakage of the insulator or the fuel evaporative element. The electrical supply for the heater element is made through a relay, which can be located by reference to the workshop manual. A thermostatic switch is connected into the control feed from the ignition switch to the relay. This is located in the water jacket and can be identified by reference to the workshop manual. Apply a thread sealant when refitting the switch into the water jacket.

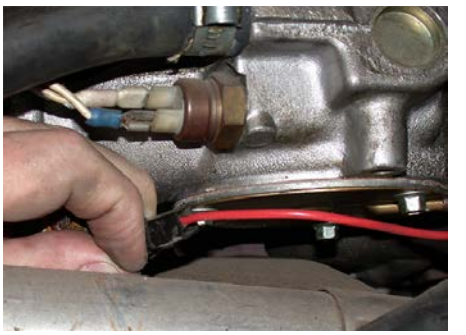
Electric manifold heating was used on some systems

115. **Worksheet** Remove

and refit fuel injection air ducting, air cleaners, resonators, plenum chambers airflow meters and throttle bodies.

The main point to observe with this task is the labeling of all cables, vacuum pipes, and electrical terminals before removal. Fuel injectors are usually fitted on or into the inlet manifold. Depressurize the pipes before removal. Cap or plug the pipes to prevent fuel leakage and to prevent the entry of dirt. Keep the injectors in order and ensure that they remain clean. On engines using a fuel rail, remove the rail and injectors as a single unit.

Air intake components and ducting

Fuel rail and injectors

Air Duct Components The air duct components form a continuous air passage into the engine. Components fit together and are sealed at each joint with clamps around pipe-to-pipe fittings. Nuts and bolts are used for flange and gasket fittings. Some of the components are fitted to the engine, or vehicle body, with suitable brackets.

Air duct connection

Plenum Chamber The plenum chamber is often integral with the inlet manifold pipes and attached directly to the cylinder head. The joint must be cleaned and fitted with a new gasket whenever the joint is separated. The plenum chamber fits to a series of short inlet pipes. This complete assembly should be loosely assembled until the final tightening sequence of specified torque is made.

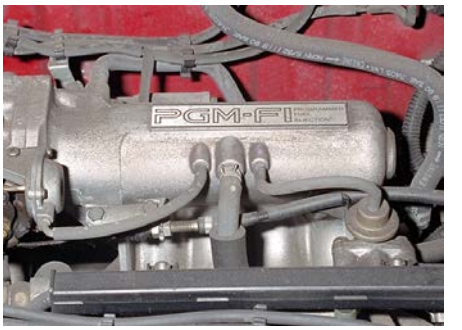

Inlet manifold plenum chamber

Throttle Cable Adjust the throttle cable in accordance with the manufacturer's instructions when refitting. Where automatic transmission is fitted to the vehicle, the kick down cable may be attached to the throttle cable quadrant. The kick down cable adjustment must also be set in accordance with the manufacturer's instructions. This is to ensure that the transmission operates correctly.

Throttle cable attachment

116. **Worksheet** Remove and refit all parts of catalyst exhaust system including lambda/HEGO sensor.

This task is carried out in the same manner as a non-catalyst system. However, the catalytic converter, which is usually held with flange joints at each end, and the lambda sensor must be removed. The sensor, which has a heater circuit and a sensor circuit, is connected with a multi-plug to the ECU. Disconnect the socket before undoing and removing the sensor from the exhaust manifold.

Exhaust system with a cat

117. **Worksheet** Remove and refit turbocharger (adjust boost pressure) and intercooler.

The turbocharger is fitted on the exhaust manifold before the down pipe. When refitting the pipe, accurate alignment and security must be provided so that no stress forces are applied to the turbocharger housing. Any distortion of the housing will affect the free running of the spindle in its bearings and lead to premature failure. Remove the air supply pipes to and from the turbocharger. Remove the oil feed and drain pipes catching any lost oil. Where engine coolant is also used for turbocharger cooling, drain the coolant and remove the feed and return hoses.

Turbocharger oil pipe connections

Factory Built Units Remove the turbocharger from the exhaust manifold and lower from the engine. If it is possible to strip the turbocharger for internal repairs, follow the manufacturer's instructions. However, many small turbochargers are replaced as factory built units, and spare parts may not be available. Refit in reverse order, paying very close attention to the fitting of the exhaust front pipe.

A new turbocharger in position

Boost Pressure Where boost pressure is adjustable, follow the manufacturer's instructions. The setting is adjusted by altering the length of the link rod. This runs from the pressure unit to the waste gate linkage. The adjustment may be a dimensional setting or a pressure setting, depending on installation. If no adjustment is recommended, do not disturb the original factory settings. If a problem exists, it is more likely that seizure of the waste gate linkage or spindle is the fault. This should be checked and repaired if necessary.

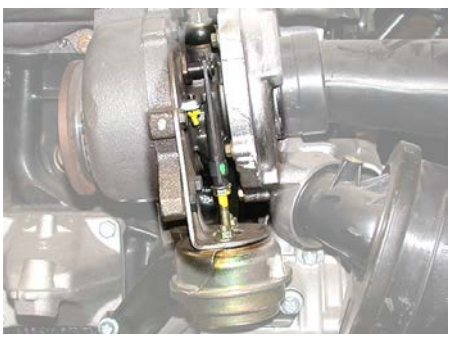
Adjust this rod to set boost pressure

118. **Worksheet** Remove and refit EVAP components.

These components include the vent pipes from the fuel tank, up to and through the evaporative canister, and into the engine inlet manifold. Also included are the vacuum control switch, hoses, and the electrical relay which is triggered from the ECU. Refer to the vehicle manufacturer's instructions for this task. It may be necessary to lower the fuel tank to gain access to the tank vent pipe. The evaporative canister may be located in any number of positions. Most pipes are held in place on the vehicle body with push-in, or fold-over pipe clips. Plastic pipes and rubber sleeve connectors are used on many systems.

EVAP canister

119. **Worksheet** Remove and refit AIR components.

AIR pipes

Pump

The air pump, for this system, is mounted on the side of the engine and is driven by a belt. The pump mounting may include the adjustment bracket for the drive belt. Slacken the belt and loosen the pump mounting bolts. Remove the hoses from the pump and from the air diverter valve. Two pipes lead from the air diverter valve, one to the air inlet to the engine in the air cleaner ducts, and the other to the air injectors on the exhaust manifolds.

120. **Worksheet** Remove and refit pulse air system (Air aspiration system) components.

Pulse air unit

On some vehicles, the components of the pulse air system are made as a single unit. It is attached to all or some of the exhaust ports in the cylinder head. The unit consists of the air intake and the control and non-return valves. A set of pipes connects to the air injectors in the exhaust ports. The pipe unions are threaded into the manifold. Conical or gasket seals are used to give a gas tight joint.

121. **Worksheet** Remove and refit EGR components.

An important exhaust gas recirculation component is the EGR valve. This valve opens to allow exhaust gases to flow from the exhaust manifold into the inlet manifold. Many EGR valves are operated by vacuum motors. The vacuum feed from the inlet manifold is switched by an electrical solenoid valve. This valve is energized from a relay on signals from the electronic control unit.

EGR Valve Replacement of an EGR valve may follow a diagnostic test for defects. This test includes the use of a vacuum pump on the EGR valve when the engine is running at idle speed. A vacuum is applied to the valve and this should cause the engine to slow down or stall. If this does not occur the diaphragm may be defective, or the valve seized, so that it does not open. The EGR valve is replaced as a unit.

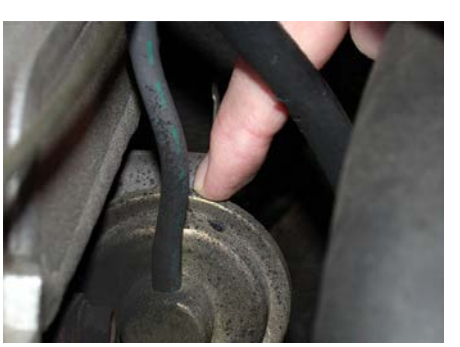
Valve assembly

EGR Components Locate the EGR components by reference to the vehicle manufacturer's workshop manual. Follow all instructions for removal and replacement. This system is required to meet stringent exhaust emission regulations. For this reason, only manufacturer's recommended replacement parts should be used. It is important to check that all joints are gas tight following a replacement.

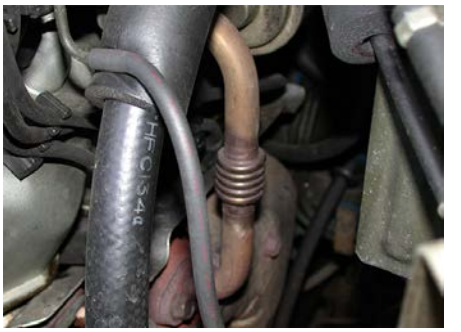

All EGR connections must be gas tight

122. **Worksheet** Remove and refit supercharger.

There are several different types of superchargers fitted to engines. Where the supercharger is fitted as original equipment, it is likely to be in an integral housing, attached to the cylinder head of the engine. Superchargers are also fitted as after-market accessories to improve engine performance. The drive to the supercharger is made by a belt or internal gearing.

The Lincoln LS concept vehicle (shown here) is fitted with an Eaton Supercharger as well as many other desirable features.

Superchargers are often part of a complete package[2]

123. **Worksheet** Remove and replace thermostat.

The thermostat can be fitted in one of three places: in a housing on top of the engine, in the top hose or in a bypass housing. Some manufacturers fit the thermostat and housing as a single unit. In this case, the complete unit has to be replaced if a new thermostat is required.

Thermostat…

Being removed

Thermostat Replacement Drain only as much coolant as is required to bring the level below the thermostat. When replacing the thermostat, ensure that the wax pellet is on the hot coolant side, which usually means into the engine or the bypass coolant passage. Check the mating faces of the thermostat housing for flatness before replacing. Use a sealant on the gasket and on any bolts that run into the coolant passages.

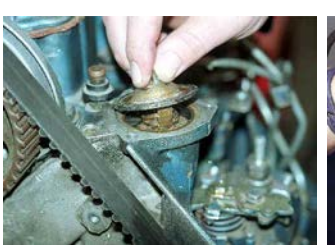

Coolant level below thermostat

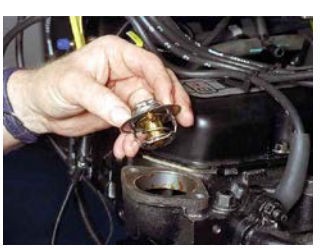

Thermostat being replaced

Check the thermostat housing flatness

Sealant on gasket and bolt threads

System Checks Check and top off the coolant after reassembly. Check for coolant leaks as soon as the engine is running. When the engine has warmed up check that the heater works correctly. After a road test, check that the coolant level and heater operations are still correct.

Leaks and heater checks

Vehicle Presentation Always ensure that the vehicle is clean before returning to the customer. Remember, a happy customer will come back!

Read the previous section again and note down some key bullet points here:

-
-
-
-
-

Fault diagnosis

Checking the System

System Performance Checks System performance checks are routine activities that occur during all servicing work. They start at pre-delivery and continue for all scheduled service intervals. Quick checks must be thorough, as they are looking for incorrect operation or adjustment and the first signs of deterioration. Detailed diagnostic procedures may be required to identify faulty components. Always refer to manufacturer's data when necessary.

Refer to data as required

124. Worksheet Carry Out Visual Checks on Stationary Engine

These checks can be quick visual checks that are carried out at all service intervals or can be full checks at other times when faults are suspected. The visual check includes looking at components shared with other systems. The main items for inspection are gaskets and oil seals, drive belts and for component security.

Visual checks can reveal much

Check Drive Belts for Condition Coolant leaks leave a telltale greenish white powdery stain below the leak where antifreeze has dried. Check drive belts for condition. Look for frays, cracks and glazing on the belt sides. Check that the belt tension is correct for the type of belt.

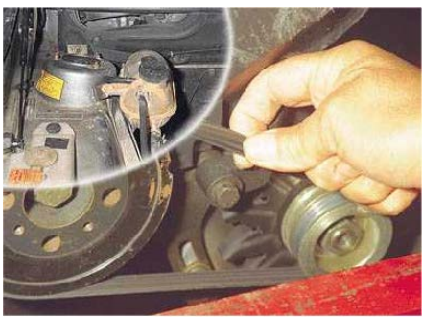
Tension check

Check Engine Mountings Always look closely and carefully at the engine mountings and the brackets on the engine and body or chassis of the vehicle. Look for fractures, loose securing bolts and separation of the bonded rubber mount. Check the air inlet and exhaust pipes for security, routing and condition.

Mountings

Ignition Systems The checks included in this learning program apply to the ignition system. Refer to the Engine Mechanical, Fuel Systems and other learning programs for details of full engine-systems inspection procedures.

System Performance The checking of ignition system performance is in three main parts. The first is based on the driver's comments and the findings from a road test.

Check for faults during a road test

Visual Check The second part consists of visually checking the components for signs of damage, broken or poor connections, and breakdown of the insulation of primary and secondary wires, cables and connectors.

Distributor cap and leads

Circuit Measurement The third part is the measurement of the primary and secondary circuits and of individual components for dwell, voltage, current, and resistance. Instruments used for these tests range from handheld multi-meters to engine analyzers with oscilloscope capabilities or data screens. Dedicated test equipment for self-test code readouts and on-board diagnostics (OBD), is used for most modern vehicles.

System measurements

Drivers' Comments Drivers' comments are important for diagnosis of problems. The information obtained from discussion with the driver should cover sudden or gradual deterioration of performance, symptoms such as misfire, pinking or lack of power, and any service information that is not in the customer's record files.

Damaged coil connection

Rotor arm problem

Contaminated spark plug…

…and again!

Introduction The checks included in this learning program apply to the engine cooling and in-car heating system only. Refer to the Engine Mechanical learning program for details about engine mechanical tests. Checks on the air conditioning system are also included in a separate program.

Operation of the Cooling System The proper operation of the cooling system is important to ensure clean and efficient combustion. A quick check of cooling system performance should be made at every scheduled service interval.

Quick Checks Quick checks must still be thorough, as they are looking for incorrect operation or adjustment and early signs of deterioration. Checks for leakage involve looking for discoloration and a build-up of white to blue deposits from antifreeze leakage. This sign of leakage is more likely than actual wet patches where leakage is occurring. All rubber-based components, such as hoses and drive belts, should be checked for deterioration, cracking and the breakdown of the fabric reinforcement.

Cooling system

Regular Checks A complete check of the system should be carried out at regular intervals. Diagnostic checks should be carried out whenever faults are suspected.

Pressure test

Component Replacement Many cooling system components require replacement during the service life of the vehicle. If failure is not detected early enough, coolant leakage may occur and engine failure is likely.

Hoses and drive belts

Breakdowns Many roadside breakdowns are caused by cooling systems overheating. There are a number of common causes for this, including loss of coolant and broken drive belts. Pressure loss from the combustion chambers into the coolant jacket is also possible.

125. **Worksheet** Inspect system for leaks and the condition of hoses and other components.

Carry out a pressure test to the system and cap. Check the coolant for condition and antifreeze strength. This check can be completed in full with the use of the pressure tester, or it may be part of a quick check when only a visual inspection is carried out. The complete check is necessary for diagnostic purposes.

Coolant Leaks Check all hoses, pipes, joints, gaskets and the water pump. The heater and water valve should also be checked for external leaks. Look inside the vehicle under the heater for leaks from the heater core. If no external leaks are visible, check the coolant for oil contamination. Check the coolant for contamination when checking the level.

Cooling system component checks

Antifreeze Content A check of the antifreeze content with a hydrometer may indicate a reduced percentage of antifreeze. This may indicate that frequent topping off with water has occurred. Check with the owner or driver of the vehicle for information on the need for topping off the coolant.

Antifreeze hydrometer

Pressure Test If no leaks can be found, although regular topping off is needed, check the condition and operation of the pressure cap. It may also be necessary to carry out tests for exhaust gas contamination in the coolant. This is carried out with a special liquid in a container attached to some types of pressure testers. The color of the liquid changes if exhaust gas is present in the coolant. Follow the equipment manufacturer's instructions for carrying out this test.

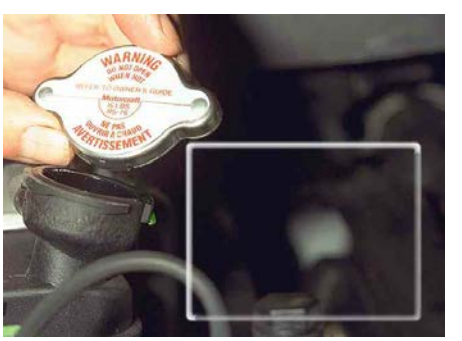

Check for exhaust gas contamination

126. **Worksheet** Check engine for non-starting, poor starting, pinking, misfire, uneven running, etc.

Although the majority of problems of this type are usually ignition system faults, there is always a possibility that they are not. Therefore, other systems should also be checked. For engine misfire where an ignition fault is not immediately obvious, it may be useful to carry out a cylinder compression test before proceeding with any other tests.

Fuel-System Performance Checking fuel-system performance may require information from the vehicle driver for details of fuel consumption and engine performance. If the driver is reporting a problem, always obtain as much information as possible. Establish the symptoms of the fault rather than another person's idea of what the fault may be. Adding the driver's comments to a technician's findings from a road test will provide useful data for diagnostic tests and for solving problems.

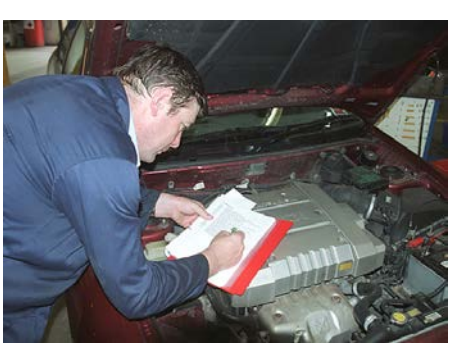
Note symptoms and possible causes

Fuel System Faults Many fuel system faults have similar symptoms to ignition-system and engine-mechanical faults. It is important to ensure that those systems are working correctly before looking for fuel faults. Similarly, air supply, exhaust, and emission-control systems should also be checked at the same time.

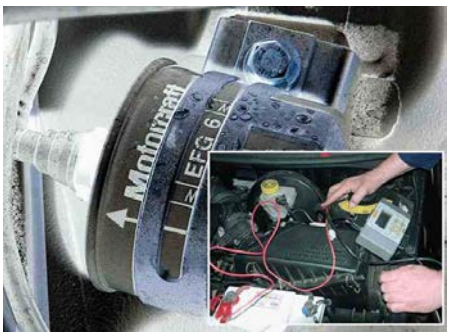

Check all systems

Filters One of the most important things to look at – right at the beginning of inspection – is the condition of the filters. A blocked air filter will reduce the airflow into the engine and cause high fuel consumption, poor performance and a dirty exhaust. A blocked fuel filter will reduce the fuel flow, leading to engine hesitation, cutting out and a lack of power.

Air filter

Fuel filter

Visual Inspections Some of the fuel-system checks consist of visual inspections of components. These checks are to look for signs of leakage from the fuel lines or connections. Any signs of seepage of fuel should be attended to as quickly as possible in order to prevent serious leaks from developing.

Fuel leak

Exhaust Gases Other tests and inspections require the measurement of exhaust gases, fuel delivery quantities, fuel-line pressures, diesel fuel injection timing and electronic-system components. Instruments used for these tests range from handheld multimeters, to engine analyzers with oscilloscope capabilities or data screens.

Fuel pressure gauge

Multimeter

Drivers' Comments Drivers' comments are important for diagnosis of problems. Information obtained from discussion with the driver should cover sudden or gradual deterioration of performance, the nature of problems (such as misfire, high fuel consumption or lack of power), and any service information that is not in the customer's record files.

Note what the driver has to say

Engine Analyzer An engine analyzer can be used to check the operation of gasoline injectors. Waveforms can be displayed and compared with the technical specifications for the vehicle.

Vehicle on engine analyzer

Under-the-Hood Checks Basic under-the-hood checks of the air supply system look for security, routing, and the condition of the air filter element. The exhaust is checked for leakage, condition and security. The emission control systems should be checked for hose condition and for correct operation. Listen for uneven running of the engine and check for incorrect exhaust gas constituents. Check all rubber-based components such as hoses and drive belts for deterioration, cracking and the breakdown of the fabric reinforcement.

Look for signs of damage

Diagnostic Checks A complete check of the emission control systems is required at specified intervals. Diagnostic checks should be carried out whenever faults are suspected. The main problems occurring with the air supply and emission control systems are caused by blocked filters. Oil separators, valves and vacuum hoses should also be checked.

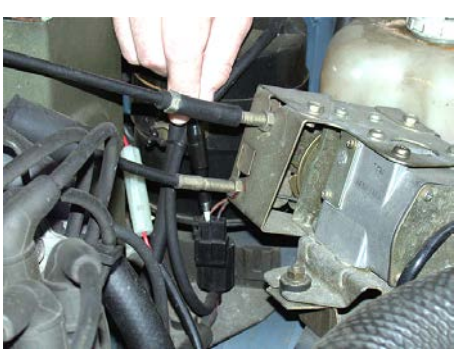

Checking the voltage supply to a valve

127. **Worksheet** Inspect air supply system for leaks and condition of ducts, housings, manifold gaskets etc.

Air filter and housing

Check intake air temperature control mechanism.

The air supply ducts, air cleaner housing and the inlet manifolds are checked for security and air leaks. Remove the cover on the air filter housing and inspect the element. An accumulation of dust is normal, but if the filter is clogged, the frequency of change is too long. Oil contamination in the air filter is most likely caused by a blockage in the crankcase ventilation system. Air leaks into the system, after the throttle plate, will affect the air fuel ratio.

Air Intake Temperature Control The air intake temperature control mechanism is thermostatically operated. Two methods are used: a vacuum operated, or a waxstat (wax operated thermostat) operated flap in the air intake tubes. One tube is a cool direct air supply and the other is an insulated hot air supply directed over the exhaust manifold. The flap mixes the cool and hot air during cold engine running conditions. Check that the flap obstructs the cool direct supply when the engine is cold and opens to allow cool air to flow when the engine is warm. A visual check is usually sufficient for this.

128. **Worksheet** Check operation of positive crankcase ventilation system (PCV).

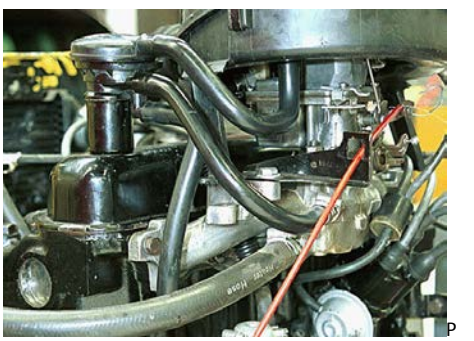
Positive crankcase ventilation system

This check is important if the air cleaner element is contaminated with oil, or if the exhaust gases contain blue smoke. Look at the PCV pipes and valves for condition, sealing and security. Check the air intake to the engine crankcase. The crankcase gases are vented through an oil separator which must be cleaned at specified intervals. The PCV valve is a one-way valve that allows airflow to the inlet manifold. It can be removed for cleaning and checking, and will rattle when shaken if the valve plate or plunger is free.

129. **Worksheet** Check the exhaust system for condition, leaks, blockage and security.

Exhaust system

This check has two stages. The first is listening to the exhaust with the engine running and when the throttle is blipped (pushed down and released quickly). The second part is a full visual inspection. When the engine is running, listen for exhaust blow from any part of the system. You can hold a cloth over the tail pipe to increase the internal pressure. Blip the throttle and listen for a screech, which can be heard if the exhaust manifold to cylinder head or front pipe flange is loose or the gasket broken. Check for blockage by making sure that the engine revs freely.

Exhaust Checks Look along the length of the exhaust pipes and silencers for signs of leakage, which show as black sooty markings, and for corrosion. Also check the security and condition of the mountings and heat shields. Look for signs of incorrect positioning causing chaffing or knocking, and carefully judge the clearance over moving components, such as axles and suspension parts. Check the engine mountings, as these can cause stress on the pipes and premature fatigue failure when worn. Where a turbocharger is fitted, check that the front pipe is properly supported so that it does not apply a stress to the turbocharger body.

130. **Worksheet** Carry out exhaust gas analysis using an exhaust gas analyzer.

Exhaust gas analyzer in use

Before using on a vehicle, an analyzer should be run for ten to fifteen minutes, followed by a set-up procedure. Regular maintenance schedules for the equipment must be followed. A probe is inserted into the vehicle exhaust tail pipe and measures gas contents in the exhaust. The results are shown on a meter dial, screen, or paper print out. Unusual readings can indicate piston and inlet valve stem seal wear.

Gas Analyzer Set up the gas analyzer and insert the probe into the exhaust tail pipe, in accordance with the manufacturer's instructions. Where a prompt sequence for the analyzer is used, follow the sequence for the test. Where no prompts are used, take readings at idle and again at a mid speed position. Compare these readings with statutory and vehicle manufacturer's data. Catalytic converters are tested for statutory purposes with a certified tester.

Check exhaust gas test results against data

131. **Worksheet** Check operation and security of turbo chargers/superchargers.

Damaged turbo blades

Turbochargers fit into the exhaust and air intake systems and should be checked at the same time as these systems. Inspections ensure that the turbocharger has no exhaust, oil or coolant leaks. Ducting to and from the compressor must be leak free. Leaks on the intake side are likely to draw unfiltered air into the compressor, with a risk to the compressor blades. Look at the intercooler for leaks in the air passages and for blockage in between the cooling air fins.

132. **Worksheet** Check operation of Early Fuel Evaporative system.

If the heater element is working correctly the cold start and warm up performance will be normal. A further check to confirm that the heater is working is to carry out voltage, current and resistance checks with a digital multimeter. Connect the meter in accordance with the manufacturer's test sequence. Compare the readings with the manufacturer's data.

Taking a voltage reading

133. **Worksheet** Check operation of EVAP (Evaporative canister).

The evaporative canister purges the charcoal filter when the engine is warm. Electrical or electronic and vacuum controls are used for this. Check all vacuum hoses, vapor hoses, and electrical terminals for condition and security. Follow the manufacturer's instructions for checking the control circuit and vacuum operation.

EVAP canister

Vapor Flow It is usually possible to check the vapor flow into the canister by removing a vent pipe and blowing air through it with a pump. The reverse flow, through the charcoal filter in the canister, is through the purge valve and into the inlet manifold. The purge valve is controlled by the ECU, which sends a signal voltage to open the valve.

Purge Valve Two types of purge valve are used; one is a vacuum motor linked to an electrical solenoid valve, and the other is a simple solenoid. There may also be a thermostatic vacuum switch in the vacuum line, which is usually fitted on top of the inlet manifold. The vacuum motor type opens the purge line when a vacuum is applied to a diaphragm unit. The vacuum is applied to the diaphragm when the solenoid valve is actuated by a signal current from the ECU. The solenoid valve opens to allow a vacuum to be passed from the inlet manifold to the purge valve.

EVAP valve

Valve Operation To check the operation of either type of valve, remove the appropriate pipes and apply a vacuum with a vacuum pump to the diaphragm unit and the outlet pipe from the valve that leads into the inlet manifold. Draw a small vacuum on the outlet pipe, and when the valve is actuated, it should release.

Apply a small vacuum to the valve

Vacuum Switch Where a thermostatic vacuum switch is fitted, a vacuum should be measurable once the engine has warmed up. This vacuum can be measured on the pipe to the diaphragm unit. Vacuum should exist on the vapor feed pipe to the inlet manifold. For electronic engine management systems, follow the manufacturer's test procedures.

Follow manufacturer's test procedures

134. **Worksheet** Check operation of catalyst and lambda/HEGO sensor.

In the exhaust down pipe

The engine should be at normal running temperature and be running evenly. Any misfire should be investigated and corrected before completing the test. Lambda sensors are used in closed loop systems. The signals from the sensor are used by the engine control module to raise and lower the amount of fuel delivered. In this way, a near perfect air fuel ratio is obtained. A small surplus of oxygen is also made available for the chemical reactions in the catalytic converter.

Lambda Check A lambda check must be carried out with a four gas analyzer. A correctly operating closed loop system should always give correct exhaust gas constituents under all conditions. Many analyzers incorporate a 'prompt' test sequence, which must be followed.

Four gas analyzer

Lambda Voltage Readings Check the high and low voltage readings on the signal wire of the lambda sensor. A heated exhaust gas oxygen sensor has four wires. Two are for the heater and the other two for the sensor. Connect the voltmeter leads to the sensor wires and set the tester to read the high and low recorded voltages. These will be shown on the screen and should be about 0.2 V, when no oxygen is sensed, and about 0.8 V, when there is oxygen in the exhaust gas. Both readings should be given when the closed loop control is working correctly. Check and compare the exhaust gas constituents with manufacturer's specifications.

135. **Worksheet** Check operation of AIR (Air injection reactive system) or pulse air system.

Air injection pipes

For both systems carry out a visual check of all components for security, sealing and condition. Check the air feed in front of the check valves and injectors in the exhaust ports for signs of exhaust blow-by. This will show as black soot tracks. For AIR systems, check all components if exhaust blow-by is detected.

Air Pump Check that the airflow from the pump to the air switching valve increases as the engine speed increases. Disconnect the pipe for this. Reconnect the air feed to the air switching/diverter valve and disconnect the feed to the air cleaner. Blip the throttle and check that air flows on deceleration and for about five seconds after the idle speed is resumed. After this, there should be no airflow at idle. Check the vacuum and voltage at the air switching valve in accordance with the manufacturer's test procedures.

Air pump design

136. **Worksheet** Check operation of EGR (exhaust gas recirculation).

Obtain information from the driver or road test the vehicle. Listen for pinking, misfire or uneven running, and check the engine temperature for a tendency to run hotter than usual. These could indicate that the EGR system is not functioning correctly.

Exhaust Gas Recirculation One of the first items to check when an engine runs unevenly, or stalls at idle speeds, is the EGR valve. Check the EGR valve by applying a vacuum with a pump and checking for a misfire or stalling. The engine will run unevenly or stall during idle if the valve is operated. Normally the valve is closed at this time. If no change occurs, the valve is probably faulty.

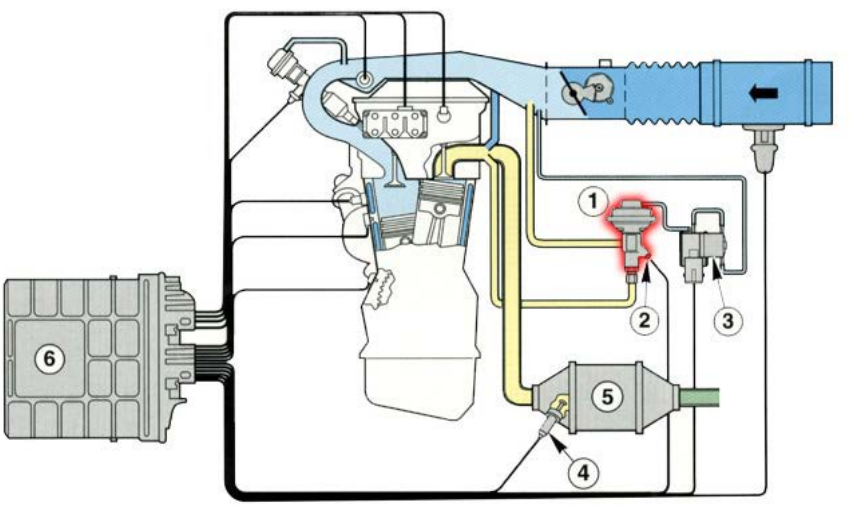

EGR Valve

Vacuum Supply Check the vacuum supply to the valve. Do this by disconnecting the vacuum pipe and measuring the vacuum with a gauge when the engine is run at a mid engine speed. Check the electrical feed to the vacuum control solenoid with a digital voltmeter. Check electronically controlled systems with specialist equipment to obtain a fault code or an on board diagnostic (OBD) output.

Read the previous section again and note down some key bullet points here:

-
-
-
-
-

Inspect and Measure Components

137. Worksheet Inspect Cam Followers, Shim Adjust Tappets and Hydraulic Tappets

There are three areas on all cam followers or tappets that should be inspected. The outer side walls of the cam followers or tappets and the bores in the engine block or cam housing should be closely inspected for uneven wear patterns. Hold each cam follower or tappet in its bore and rock to check for wear. These are normally a push fit with very little noticeable free play.

Cam follower

Rubbing Surfaces Inspect the rubbing surfaces or rollers that contact the cams and the contact faces for the push rods or valves. Look for pitting and breakdown of the surface treatment. Look at hydraulic tappets in the same areas and then inspect the hydraulic components in accordance with the engine manufacturer's instructions. Some hydraulic tappets can be stripped to inspect the plungers, springs, and valves.

Contact areas wear

138. Worksheet Inspect Chain Drive Mechanisms

Chains and sprockets can be inspected in-situ (without removal) and after removal. The two main areas of wear are in the chain rollers and on the sprocket teeth. The rollers wear both internally between the pin and roller, and externally between the roller and sprocket teeth. This wear allows the chain to increase in length when it is pulling. When worn the chain becomes loose on the sprocket teeth. This is visible as a poor fit and kinking of the chain links around the sprocket.

Drive chain

Sprocket Teeth Wear on the sprocket teeth alters the tooth profile and the round shape of the indent between the teeth becomes elongated. The teeth become thinner and eventually bend in the direction of pull. Look for these defects when inspecting sprockets. Look also at the securing and locating devices for loose fitting, elongation or cracks radiating from holes.

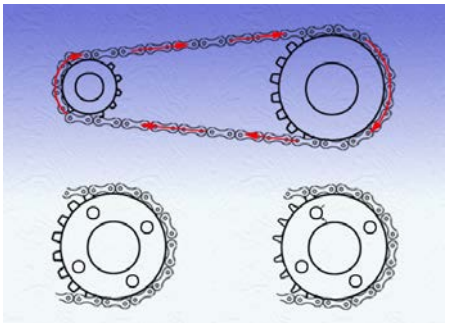

Chain drive sprocket teeth

Timing Chain When the chain is removed hold it on its side so that it is free to bend. A large degree of bend indicates wear of the rollers. Check all links and rollers for seizure, cracking or looseness of the roller-pin riveting.

Chain wear test

139. Worksheet Inspect Toothed Belt Drive Mechanisms

Toothed drive belts have two profiles: trapezoid and round. These are not interchangeable and should be matched to the correct profile drive gear. The drive belt is made from a rayon belt with reinforced rubber teeth. The direction of rotation will be marked or should be marked before removal. Once in service the belt beds to the direction of rotation and this must not be changed. Wear and deterioration of the belt is expected, and routine changes are included in the service schedule.

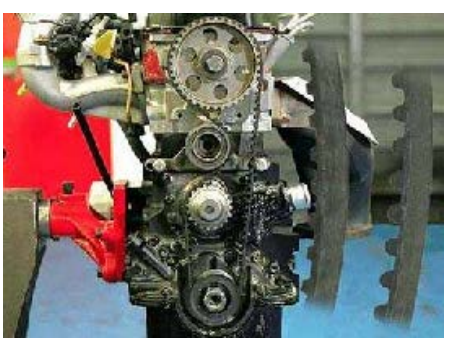

Belt profiles

Timing Belt At service inspection intervals, look for fraying of the rayon plies, cracking at the tooth bases and tension. A small amount of slack or over tightening can lead to premature failure. Look for oil leakage onto the belt and gears. This must be corrected and a new belt replaced because oil will damage the rubber and cause premature failure. Replacement of the belt should be carried out at the prescribed mileage or time intervals and at any time a defect is found. The gears are inspected for tooth condition, fracture, security, and location.

Belt tensioner

140. Worksheet Inspect Components

Inspect camshaft lobes, journals and bearings, inspect auxiliary shafts, bearings, and drive mechanisms. Camshaft lobes can be inspected directly or by performance. On a side camshaft OHV engine, it is possible to check the amount of lift of each cam with a dti (dial test indicator) on the end of the push rod or rocker.

Cam

Camshaft Lobes and Bearings OHC engine cams can be inspected and measured in-situ (without removal) after removal of the cam housing cover. By measuring all cams and comparing with each other and the manufacturer's specifications, any wear can be detected. A close inspection for surface wear and damage to the bearing journals, cams, and worm gears can be carried out after the camshaft has been removed. Measure the end float before removal and inspect the thrust plate and camshaft thrust face after removal for wear and scoring.

Cams in position

Cam Lift The cam lift can be measured by setting the camshaft on oiled paper in vee blocks on a surface table. Use a dti to measure the cam lift from the back of the cam to the peak of the lobe.

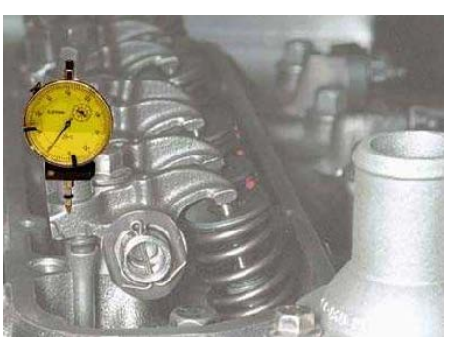
Check lift with a DTI

Cam Bearing Journals Inspect the cam bearing journals for scoring, pitting or signs of surface breakdown. Look at the bearings in the engine block or cylinder head for wear, location or other deterioration. The journals can be measured with a micrometer and the bearings with a bore gauge. The bearings of side camshaft OHV engines are smaller at the rear of the engine. Compare the journal and bearing dimensions for clearances and compare with the manufacturer's specified tolerances. Look closely at the cams for surface wear.

Bearings on the cam

Worm Gear Drives Inspect the worm gear teeth for chips and surface wear. Look at the meshing gears on the oil pump and distributor at the same time. Auxiliary shafts have similar fitting arrangements and are inspected in a similar way.

Oil pump drive

Cam Drive Mechanisms Use the drive chain and toothed belt worksheets for inspecting the drive mechanisms. Where gear drives are used inspect the backlash between the teeth in a number of places before removal. After removal check the teeth for chips and surface wear. Where self-adjusting backlash gears are used, check the springs between the two gear halves for condition, tension, and security.

Cam drive gears

141. **Worksheet** Inspect and measure sensors

This task may be best carried out using the dedicated test equipment for the vehicle. Follow the manufacturer's procedures for these tests. However, where the dedicated test equipment is not available, it is possible to check the sensors with a digital multimeter. These tests must be carried out exactly in accordance with the vehicle manufacturer's instructions. Otherwise, damage to the system and components can occur.

Speed and Position Sensor This test is for an engine speed-and-position sensor showing a measurement of the resistance of the sensor to confirm continuity and correct resistance value. It is also necessary to check the air gap between the sensor and sensor ring (rotor) fitted to the crankshaft.

These sensors are of the reluctance type and might also be fitted inside a distributor on some engines.

Engine speed sensor resistance measurement (faulty sensor)

Hall-Effect Sensor Hall-effect sensors are also used in distributors for the same speed and position functions. The Hall-effect sensor supply voltage can be checked with the ignition switched on to confirm that the supply voltage is not less than the specified value (DC volts). Checking the output voltage at the appropriate terminals requires the comparison of two readings. One with the rotor blade between the sensor gap and the other with the rotor slot across the air gap.

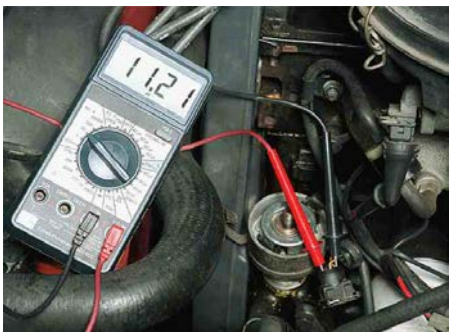

Checking Hall sensor supply voltage

Knock Sensor A knock sensor will give out a small AC voltage reading when the sensor is gently knocked with a small spanner wrench. The best test, however, is to connect the sensor to an oscilloscope and examine the waveform as it is tapped.

Temperature Sensor The resistance of a coolant temperature sensor can be measured at an approximate temperature and should show a resistance value (Ohms) as per the manufacturer's specifications.

Coolant sensor resistance

142. **Worksheet** Inspect and measure the ignition coil

The ignition coil can be checked for continuity and resistance with a multimeter.

Coil resistances

Summary Most ignition components are easy to test using a basic multimeter. However, it is essential to check the manufacturer's latest recommendations and data.

Use of correct data

Defective Components Before inspecting for defective components, make a diagnosis based on information obtained from the vehicle driver, from road tests or from other test procedures. Always consider the cause of any fault and seek to rectify this as well as replace the defective components. Carburetor and fuel-injection component faults will usually lead to air-fuel mixtures that are either too lean (weak) or too rich (strong). If there is an unbalance across the engine's cylinders, uneven running and misfires will be experienced.

Low CO readings

High CO readings

Range of Faults Although there are a number of different fuel supply systems in use on vehicle engines, a common range of symptoms can be experienced on all types. Inspections to identify the faults causing the symptoms will need to first identify the system and then the components that are operating incorrectly. A sound knowledge of systems technology is necessary for effective diagnostics of fuel-supply systems.

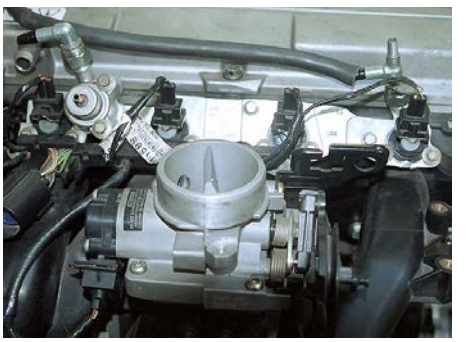
Fuel injection system

Comparison of Measurements The most important aspect of inspecting all fuel systems is the comparison of measurements with the manufacturers' specifications. All mechanical, electrical and electronic components have fine tolerances for precise operation to meet environmental regulations. Always follow the vehicle manufacturer's instructions given in workshop manuals whenever carrying out any repair or inspection work.

Refer to data to ensure the job is done correctly

143. **Worksheet** Inspect electronic monopoint -injection components.

Monopoint fuel injection systems are also referred to as single, center-point or throttle-body injection systems. Visually inspect the fuel feed and return pipes and hoses. Look for leakage, condition and security. Visually inspect the electrical terminals, cables, and multi-sockets to all sensors. Check the ECU and actuators for damage and deterioration.

Monopoint injection throttle body

Electronic Monopoint Injection Check the fuel-pressure regulator with a pressure gauge and suitable adapters. Adjust if necessary, although this is only possible on some systems. On others, the regulator will need to be changed if the pressure is outside of specified limits.

Pressure regulator

Exhaust Gases Check throttle spindle to housing for wear by rocking the spindle in the housing. Alternatively, check for an inflow of air past the spindle when the engine is running. Check that the throttle plate opens fully when the throttle is depressed. Check the system function and performance with an exhaust-gas analyzer and specialized test equipment. Compare the measurements with the manufacturer's specifications.

Exhaust gas analyzer

144. **Worksheet** Inspect electronic multipoint-injection components.

Multipoint fuel-injection systems have injectors in the air-inlet manifold. They may be referred to as port fuel-injection systems. The tests and inspections for electronic-multipoint fuel injection are similar to those for monopoint or throttle-body fuel injection systems. At all times, follow the manufacturer's instructions.

Multipoint injection system

145. **Worksheet** Check fuel system components using digital multimeter/oscilloscope.

Obtain the manufacturer's test data and procedures and then identify the fuel system sensors and actuators for test. Follow the manufacturer's instructions to test the components. Compare all measurements and gauge readings with the manufacturer's specifications.

Bosch MultiScope

146. **Worksheet** Inspect fuel tanks, EVAP, and fuel lines.

Signs of leakage

Visually inspect the fuel lines, pipes and hoses for condition, corrosion, perishing, and any other deterioration. Check the security of the pipes and hoses where they join and where they are attached to the vehicle body. Look for signs of leakage, which will usually show as discoloration or staining.

Evaporative Emissions System Check the security of the fuel tank mountings. Inspect the filler neck, filler cap and vent and vapor pipes. Look at the condition of the fuel tank. Look for corrosion and signs of leakage at the seams and fuel gauge sender unit and fuel pump gasket. Check the vapor canister for airflow into the canister and return under vacuum to inlet manifold. This usually involves disconnecting pipes or hoses and applying a vacuum with a vacuum pump to the canister-purge control valve. Check the operation of the canister-purge solenoid under appropriate operating conditions.

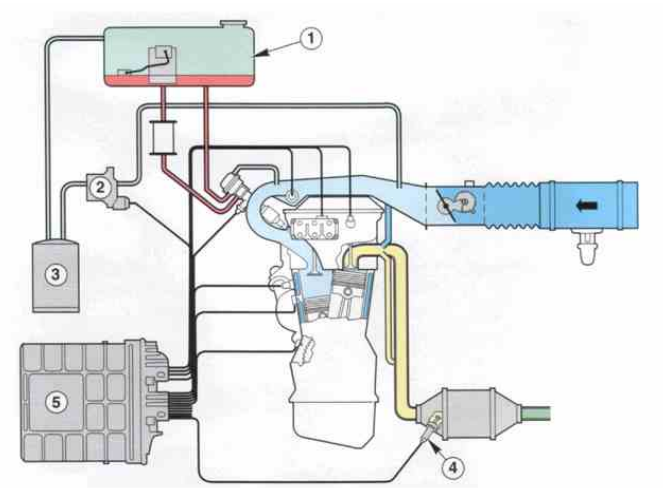

Fuel vapor management system1

147. **Worksheet** Inspect fuel cutoff/deceleration control circuits and devices.

Fuel cutoff and deceleration control devices are used on all engines to reduce the amount of fuel used on overrun when the vehicle is slowing down. Check with individual vehicle manufacturers' data for these devices. They are emission-control devices and vary according to the country or region where the vehicle is used.

Summary Remember: follow the manufacturer's instructions for checking procedures and specifications. Take sensible safety precautions and always work in a clear, logical way. Correct operation of fuel systems is not only important for the customer – it is a legal requirement in many areas.

Fuel system airflow sensor4

Exhaust System The exhaust system is checked at scheduled service intervals. The main items to look for are leaks, security, and sound suppression. There should be no escape of exhaust gas, which could enter the vehicle and affect the driver and passengers. Checking the security of the system requires a close look at the hangers and mountings for signs of deterioration, looseness, or incorrect fitting. The pipes and silencer boxes should be in good condition and free from a level of corrosion which would indicate early perforation. Exhaust components usually corrode from the inside. This occurs because of the water and acids that are produced as a by-product of combustion.

Heat Shields Heat shields must be in place, secure and correctly positioned. This prevents fire from combustion of the sound deadening materials used on the floor of the vehicle. The inspection of exhaust emission system components must be in accordance with the vehicle manufacturer's instructions. The accurate checking and setting of these systems is required for compliance with statutory regulations.

Catalytic converter heat shield

Tools and Equipment Refer to manufacturer's workshop manuals and data books for any special tools which may be required for the diagnostic test. Carefully follow the instructions on the applications and uses of these tools. There are a few specific items of diagnostic and measuring equipment, which are exclusively for the air supply, exhaust, and emission control systems. The main item of equipment is a good quality gas analyzer that can measure the performance of the lambda sensor. Accurate gas analysis is required to measure the effectiveness of the emission control systems.

Exhaust gas analyzer

148. **Worksheet** Inspect exhaust system including lambda/HEGO sensor/catalytic converter.

The external inspection of the exhaust system is carried out at all scheduled service intervals. This has been covered in the Routine Maintenance section. Further checks can be made with the components removed from the vehicle. These include looking into, or through, silencer boxes and catalytic converters for signs of internal damage, deterioration or blockage.

Catalytic converter

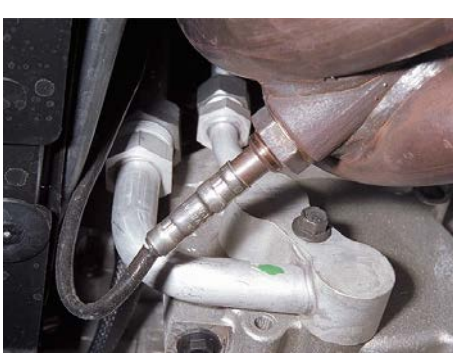
Lambda sensor

Lambda Sensor Heater The resistance of the lambda sensor heater can be checked to test continuity. Follow the manufacturer's instructions for the terminals that are used for each circuit. The exhaust hangers and mountings can be closely inspected for condition and signs of early failure. Visual checks are satisfactory for this inspection, provided rubber and flexible components are bent, pulled and pushed to assess the condition.

Heater element connections

149. **Worksheet** Inspect turbocharger/supercharger, adjust boost pressure.

These inspections must follow the manufacturer's instructions. The main points to look for are oil leaks and damaged turbine and compressor blades. Also check spindle bearing wear and waste gate condition.

Turbocharger turbine blades

150. **Worksheet** Check emission system components using digital multimeter and/or vacuum pump and gauge.

These inspections must follow the manufacturer's instructions. Refer to the vehicle workshop manual for the location of the components and the test procedures. Ensure that meters are set to the correct range and scale. Wiggle terminals to check for intermittent electrical connections.

Summary Always ensure that the vehicle is clean before returning it to the customer. This will help reinforce that you have done a good job.

Read the previous section again and note down some key bullet points here:

-
-
-
-
-

Carry Out Visual Checks on Running Engines - Including Abnormal Oil Consumption Listen to running engine for abnormal noises. This check follows the stationary engine check and includes looking at the same components. Look at the stability of the engine in the mountings and listen for exhaust knocks to complete the check on the engine mountings.

Belt and tensioner

Exhaust Smoke Check the cooling system operation and the engine idle speeds when cold (fast idle) and hot. Watch the exhaust smoke for signs of water, white smoke, which is normal when cold but should cease very soon after the engine is started. Look also for excess fuel when the exhaust contains black smoke and for burning oil when the smoke is blue and has a distinctive odor.

Engine must be up to temperature for a smoke test

Abnormal Noises Listen for abnormal noises at idle when the engine is cold and hot. Run the engine at about 3,000 rpm and again listen for abnormal noises. Press the throttle to accelerate the engine and allow it to slow down or overrun. Listen for knocking or tapping sounds from valve mechanisms, connecting rod bearings and pistons, for a rumble from the crankshaft when the main bearings are worn or for squeals from drive belts and any other abnormal noises.

Check the engine revs

151. Worksheet Carry Out Cylinder Balance Test

This test is carried out with an engine analyzer or a tachometer and grounding the high tension to each spark plug in turn. It is a comparison of the loss in engine speed that results from one cylinder not being fired. Each cylinder is made to misfire and the drop in engine speed is recorded. The greater the drop in speed the more effective is that cylinder. An ineffective cylinder will have little effect on the engine idle speed and will not change the note of the misfire. This is a useful test to isolate and identify a misfiring cylinder. Further tests will be needed to establish the cause of the misfire, which could be a mechanical, ignition or fuel problem. Always ensure that the mechanical condition is good before inspecting for ignition and fuel faults.

Engine analyzer

Carry Out Cylinder Balance Test Before carrying out this test, check with the vehicle manufacturer's instructions for any special procedures. Vehicles fitted with catalytic converters may be unsuitable for this test. In that case, other diagnostic procedures will be specified.

Check the specs…

152. Worksheet Carry Out Cylinder Compression Test

This test is used to check for mechanical faults. Loss of compression can be caused by poorly seated valves, piston and piston ring wear or damage, cylinder bore wear or damage and by poor engine aspiration.

Wet Test A wet test, in which a small drop of clean engine oil is pumped into the cylinder to seal the piston to the cylinder wall, gives an indication of where the loss of compression is being made. If it is from the valves, there is no change between the wet and dry test, but if the loss is from piston blow-by, the wet test will show an improvement in the recorded pressure. This indicates piston ring wear.

Engine Aspiration Engine aspiration is the flow of air through the engine. Incorrect valve timing and valve opening that occurs when cams become worn will show as low compression on the worn cylinders. A blocked air cleaner or exhaust will give low readings on all cylinders.

We all have aspirations…

Check for the Specified Tolerance Check that the results for each cylinder do not exceed the specified tolerance between cylinders – usually about 15 to 20 psi or 1 to 1.3 bars. Low readings, below 70 psi or 5 bars usually indicate valve defects. Readings above these may indicate piston ring wear or early signs of valve wear. Check valve clearances if low readings are found and then recheck results.

153. Worksheet Carry Out Cylinder Leakage Test

Leakage tester

This test can be used in place of a compression test as it indicates the loss of compression by listening for the leakage from the source of the leak. Air is pumped into the cylinder when the piston is at exactly top dead center (tdc). The rate of air pressure drop is measured by time and pressure drop to indicate if the engine condition is satisfactory. Any rapid drop in air pressure will also be accompanied by the sound of air flowing through the source of the air loss. Listen for air in the exhaust, an indication of exhaust valve defects; listen for air in the air-intake duct or carburetor, which indicates inlet valve defects. Piston blow-by can be heard in the rocker cover or from the dipstick tube.

154. Worksheet Carry Out Engine Vacuum Tests

Vacuum pump and gauge

It is important to check and adjust the ignition timing and the exhaust gas constituents for a correct air and fuel mixture, if possible, before carrying out vacuum tests. Follow the engine manufacturer's instructions for connection of the vacuum gauge.

Engine Speeds Carry out the series of tests at cranking speed, idle speed, on acceleration and engine overrun at about 2,500 rpm.

Test Results Record the test results and compare with data and diagnostic tables to interpret the results. Vacuum readings should be used in conjunction with other diagnostic tests and not be solely relied upon for diagnosis of faults.

Vacuum Gauge and Pump Unit A vacuum gauge is connected with a flexible hose to the inlet manifold where it is used to measure the drop in pressure (engine vacuum) in the manifold during different phases of engine performance. The vacuum readings are a measure of the effectiveness of the engine breathing and volumetric efficiency. Mechanical, air supply and exhaust system, fuel system and ignition system faults can be diagnosed from vacuum readings.

Vacuum is pressure less than atmospheric

Vacuum and Pressure Pump and Gauge Vacuum is measured in inches or millimeters of mercury or in the SI unit of kilopascals (kPa). Two series of tests are made, one with the engine cranking, and the other with the engine running. During cranking a fluctuation of the needle occurs. If the swing is irregular it indicates problems with one or more cylinders, which would require a leakage or compression test to identify.

Measuring vacuum

Vacuum Readings During engine running tests, small oscillations of the needle are normal. A vacuum of at least 16 in. Of hg (400 mm of hg) is acceptable. Readings between 15 in. And 20 in. Of hg (400 to 550 mm of hg; 50 to 65 kPa) are normal with 4-cylinder engines being at the lower end and 8- and 12-cylinder engines at the top end. The vacuum readings will fall by approximately 1 in. (25 mm) for each 330 meters (1,000 ft.) Above sea level.

Cranking Test This test may not be suitable for engines fitted with catalytic converters and for late emission-control engines on which the inlet manifold has many vacuum connections. When it is possible the test can indicate mechanical faults. Disconnect the coil, negative terminal and fuel injectors in accordance with the manufacturer's instructions to prevent the engine from starting and block off any vacuum pipes.

Ignition and fuel connections

Cranking Vacuum Engine cranking vacuum should be between 10 and 20 in. of hg, Depending on specification and should fall to zero when cranking is stopped. Where vacuum connections cannot be blocked off, lower readings of about 4 in. Of hg. Or less maybe normal.

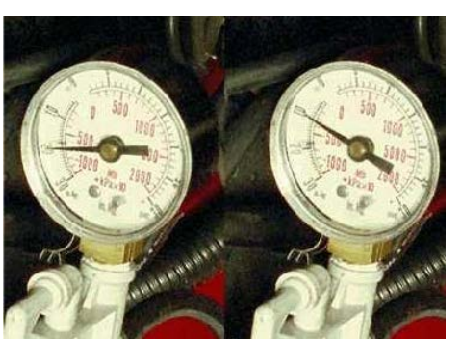
Gauge readings

PCV System If problems with the PCV system are suspected, clamp the rubber pipes. This should give higher readings if the pipes are clear but no change if they are blocked. Cleaning or replacing the PCV valve, oil strainer, air cleaner and pipes should provide correct readings. If it does not, check and fix, as necessary, the inlet manifold gasket sealing, break servo and non-return valve, other vacuum operated units, valve guides and sticking valves, worn cam lobes or incorrect valve timing.

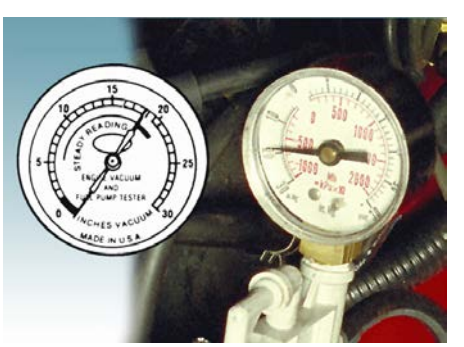

Vacuum gauges can be used to test the PCV system

Engine Running Tests at Idle Speeds Low readings indicate problems that affect the whole engine. These could be incorrect valve or ignition timing, fuel mixture adjustments, manifold leaks or wear of all cylinders and piston rings. An oscillating needle indicates individual cylinder defects, such as valve seating or piston ring and cylinder wall wear. These problems would normally be associated with an engine misfire for which further tests would be needed to identify the faulty cylinder.

Engine Running Tests with Sharp Acceleration and Deceleration from Idle Quickly open and then close the throttle. The vacuum should initially drop to about 2 to 3 in. of hg (50 to 75 mm of hg) and then climb to a figure 5 to 7 inches (125 to 175 mm) above the idle reading during engine deceleration.

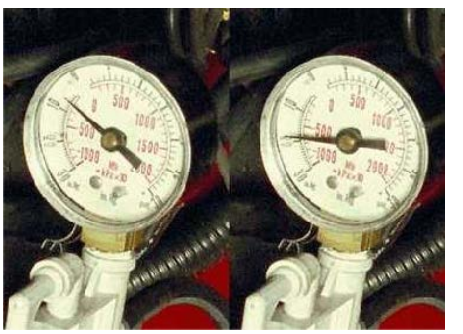

Acceleration test

Engine Running Tests at 2,500 RPM Compare the reading with the idle speed reading. It should be slightly higher and hold the needle steady.

Compare Readings Hold the speed for about a minute and observe the reading. If the figure falls slightly it indicates the possibility of a blocked or choked exhaust. Observe the readings on deceleration and compare with the deceleration to idle results from the sharp acceleration test. Both sets of results should be similar. Lower readings support the diagnosis of a blocked exhaust.

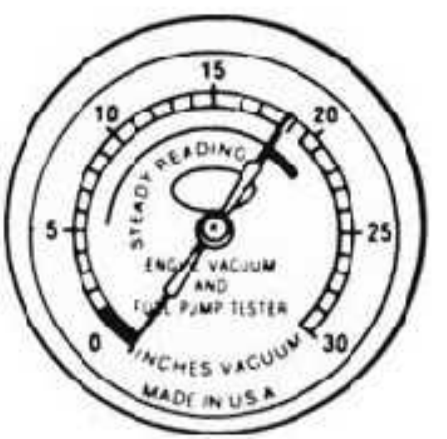

Double check any unusual readings

Vacuum Readings These diagrams of vacuum readings show some faults that can be detected with a vacuum gauge. Any diagnosis made with a vacuum gauge should be supported by other tests carried out with other instruments before final decisions on a range of possible faults are made.

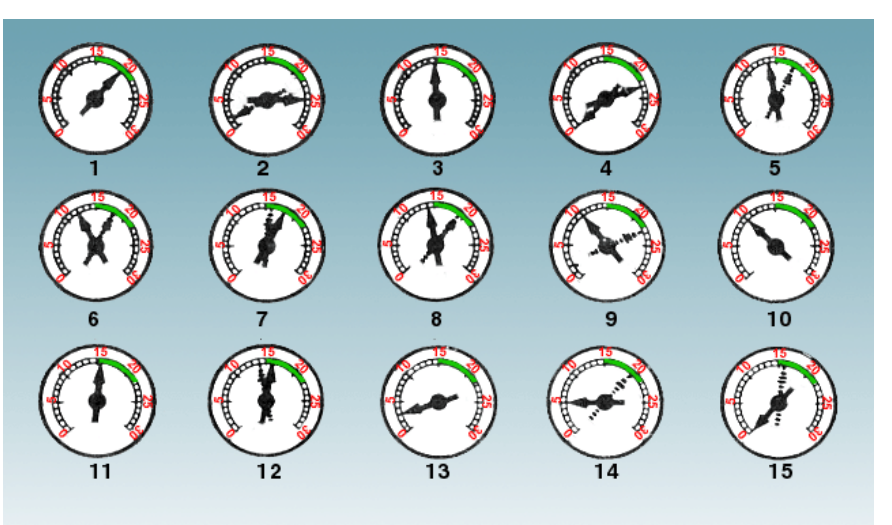

155. **Worksheet Crankcase Ventilation System** Check operation of crankcase ventilation (PCV) system.

The first part of the inspection is looking at the exhaust smoke. This inspection is common to many other tests and should be carried out at all service intervals.

Smoke check

Air Intake to the Engine Next look at the PCV pipes and valves for condition, sealing and security. Check the air intake to the engine crankcase, which may be through the oil filler cap or from the air cleaner housing.

PCV valves and pipes

Check carefully at all times

Crankcase Gases The crankcase gases are vented through an oil separator, which must be cleaned at specified intervals. Blockage of the oil separator is a main cause of high crankcase pressures.

Then oil separator must be clean

Air into the Inlet Manifold The PCV valve is a one-way valve that allows airflow to the inlet manifold. It can be removed for cleaning. It will rattle when shaken if the valve plate is free. Check the airflow in both directions. Air should flow toward the inlet manifold but not back. On engines that use a small orifice into the inlet manifold in place of a valve, check that the orifice is clear.

Keep the valve clean

Fault Categories The ignition faults fall into three groups: non-starting and poor performance' are usually caused by wear or fracture of components; 'pinking' is usually associated with advanced ignition timing under load, but can also result from pre-ignition from an incandescent point in a very hot combustion chamber; misfire and uneven running can also result from incorrect ignition timing or from defects in both the primary and secondary circuits.

Worn HT connection

Contaminated spark plug

The Driver Obtain information from the vehicle driver as to the nature of the problem and how it developed. A loose, disconnected or broken wire may cause a sudden failure. A quick visual check of the ignition system cables is a good starting point for checking non-starting and poor starting faults.

Voltage Tests The next check is for primary electrical supply and switching of the ignition coil primary circuit. Measure the battery voltage and check the condition of the feed and ground terminals. Check that all ignition primary and secondary cables, wires, and terminals are clean, free of damage, and making tight electrical connections. Turn on the ignition and measure the ignition coil supply voltage (terminal 15), which should be no more than 0.5 volts less than the battery voltage. The voltage for ballast resistor circuits, however, should be to the manufacturer's specification, which is usually 6 to 9 volts.

Meter readings are important

Electronic Systems For electronic systems, the switching action of the power transistor in the ignition module can be checked using a dwell meter. The meter cables are connected to coil terminal 1 and ground. The engine must turn on the starter motor at a normal cranking speed. A dwell reading should be recorded.

Oscilloscope Tests For oscilloscope tests, follow the manufacturer's instructions. The engine is cranked on the starter motor and the oscilloscope trace is observed. A correct switching function will produce a trace similar to the one shown here. If no switching is occurring it is possible that there is no primary current or continuous primary current. In either case, further tests on the ignition module and pulse generator will be needed. Check the workshop manual for these tests and for specifications for individual components.

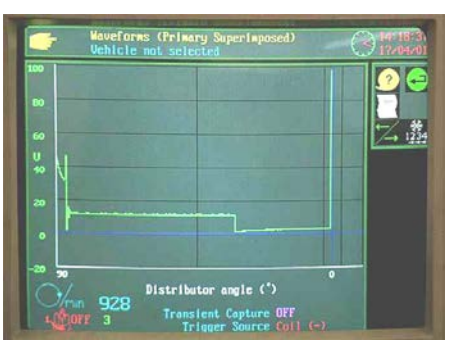

Low tension trace

HT Lead Spark Test Next, check to see if there is a spark from the coil high-voltage wire and from at least one of the spark plugs. Some technicians prefer to carry out this check first because a good quality spark may indicate that there are no primary circuit defects.

Plug Lead Spark Test Checking for a spark can be carried out with contact-breaker systems by removing the coil wire or a plug wire and pulling back the insulation sleeve at the spark plug end. Hold the cable with special insulated pliers so that the exposed terminal is about 5 mm to 6 mm away from a good ground point. Crank the engine and the quality of any spark.

Resistance Tests If there is no spark or the spark will only jump a small gap, check the primary switching and the ignition coil primary voltage at the feed terminal (15). Also test the coil primary and secondary winding resistances with the terminals disconnected.

Coil primary resistance

Coil secondary resistance

Electronic Systems Spark Testing The same secondary spark check can be carried out on electronic ignition systems, but it is important that the secondary circuit is subjected to the correct operating conditions and a special test gap must be used for this test. Disconnect the coil wire or a plug wire and fit the test unit. Crank the engine to observe the spark.

Misfires To check for misfires and uneven running, fit the test unit to all of the plug cables, in turn. This will check secondary continuity and spark quality to each of the plugs. Plug cables can be checked for continuity and resistance with an Ohmmeter set on the kilo ohms scale. Most cables have a resistance value per meter printed on the sleeve but if not, about 20k is the expected maximum. Repair or replace any defective components.

Check each cylinder in turn

Spark Plugs For all ignition faults and especially for poor starting problems, remove and inspect the spark plugs. Keep the plugs in order and matched to their cylinders. Inspect the plugs for diagnosis of defects. Opening of the electrode gap and a dirty plug tip are the main reasons for poor starting. The condition of the insulation and the plug tip can indicate a wide range of ignition, fuel, and engine mechanical faults.

Check spark plug condition carefully

Plug Conditions These two pictures show spark plug conditions and the indicated fault. Refer to a plug manufacturer's chart for more details.

Carbon fouling

Chipped insulation

Cylinder Compression With the spark plugs removed, check the cylinder compressions using a compression gauge or cylinder-leakage equipment. All types of engine running problems can result from poor engine compression. Therefore, it is important to carry out this test to make sure that the engine is in good mechanical condition before proceeding with any other work. Clean or replace and check and adjust the electrode gap on the spark plugs.

Electronic Spark Advance For electronic spark advance (programmed) systems, adapt the above procedures to suit. Inspections of the cables and terminals at the distributor and the ECU and the primary and secondary wires at the ignition coil are similar to those for any other ignition system. Primary switching can be checked at the coil terminals. Secondary sparks can be checked using a test plug, but check the manufacturer's procedures for disconnecting the fuel injectors to prevent the delivery of fuel and the movement of fuel into the catalytic converter, where it could cause damage. The procedure for compression tests may also require disconnection of the fuel injector's electrical terminals.

Timing Plug When checking the basic ignition timing, some electronic systems require the removal of a "timing plug" in the cable harness. This allows the basic setting to be made by turning the distributor body to align the timing marks on the crankshaft pulley and engine block. With the timing plug connected, the ECM makes automatic corrections. These need to be excluded when setting the basic timing to the correct position.

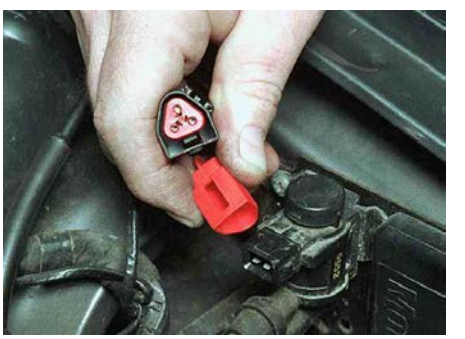
Checking the timing plug

Caution! For all electronic systems, close attention to the manufacturer's procedures and specifications is essential to prevent damage and to obtain correct diagnosis of any problems.

156. **Worksheet** Carry out manifold absolute-pressure (MAP) tests for operation of ignition system sensors and emission-control systems.

This test must be carried out in accordance with the manufacturer's procedures. A general procedure is given on the worksheet, which should be adapted to suit the particular vehicle being checked. Before checking the MAP sensor, check the condition of the vacuum hose connecting the inlet manifold to the sensor.

Applying a vacuum (low pressure) to a MAP sensor

Vacuum Measurement Connect a "T" piece to the hose to provide a take-off position for a gauge. Or, fit a gauge and follow the procedures specified by the manufacturer. Run the engine and check that the reading is within specified tolerances for the test conditions.

MAP Sensor Testing Turn off the engine and connect a vacuum pump and gauge to the MAP sensor. Connect a voltmeter or scope to the terminals specified in the test procedure. Turn on the ignition and compare the voltage or wave pattern with the manufacturer's specification.

MAP Sensor Output The MAP sensor should produce higher or lower readings at different pressures. Use the pump to give a vacuum of 0.5 bars, which is equivalent to an absolute pressure of 0.5 bars. Note the change in the MAP sensor signal voltage and wave pattern.

Gauge reading about 0.5 bar

Vacuum pump

Signal voltage

Supply voltage

157. **Worksheet** Carry out oscilloscope/engine-analyzer diagnostic test procedure.

Read the engine analyzer instructions before using the equipment and carrying out any tests. Follow the manufacturer's instructions for connecting the vehicle engine to the analyzer.

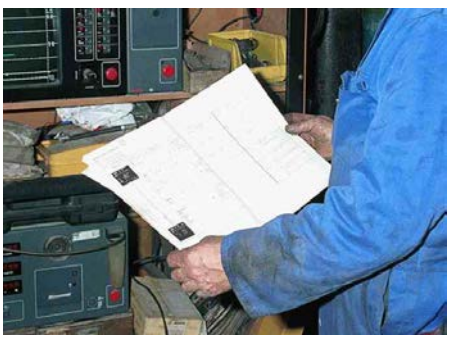
Engine analyzer and test manual

Waveform Testing To carry out the tests, follow the instructions for the equipment. Check the primary circuit by selecting the test on the analyzer. A standard waveform of the primary circuit is shown here. Depending on the equipment, the time base will be given as a percentage or as degrees of distributor revolution. The circuit open and dwell periods can be observed on the oscilloscope trace and calculated for comparison with the manufacturer's specifications.

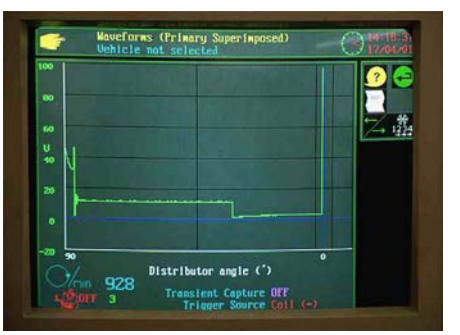

Primary circuit waveform

Diagnosing Faults from Waveforms There are a number of defects that can be shown by the waveform. The parts of the waveform normally affected are shown here. Refer to manufacturer's charts for detailed diagnosis.

Primary Waveform The primary circuit waveform for electronic ignition at engine idle speed and 3,000 rpm is shown here. The open and dwell periods in the circuit equate to the blocking time (open) and the switch-through time (dwell) of the Darlington transistors in the ignition module. Dwell angle control shows up as a drift of the closing point in time along the axis of the trace. The changes in dwell period can be compared with manufacturer's specifications.

Primary circuit waveform at idle speed[3]

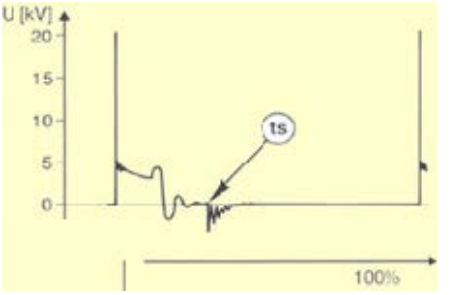

Primary circuit waveform at 3000 rpm (longer dwell)[3]

Secondary Waveform A standard waveform for the secondary circuit is shown here. The key areas, which should be examined for defects, are labeled.

Waveform Layouts The oscilloscope control usually has the facility to provide superimposed or raster patterns. These are used to compare patterns for individual cylinders. Select and use the appropriate pattern for the test being carried out and for the suspected fault.

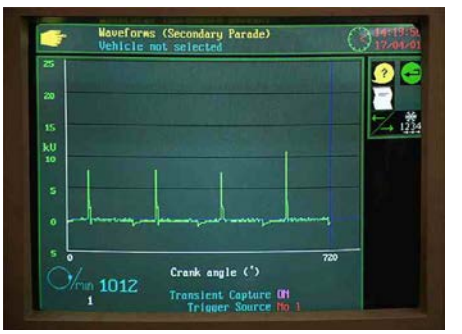

Secondary waveforms in 'parade' view

General Waveform Testing The oscilloscope can be used for other ignition tests such as the output from a pulse generator or for other systems tests. Refer to the test equipment instructions for details of the range of tests possible on the individual item of equipment.

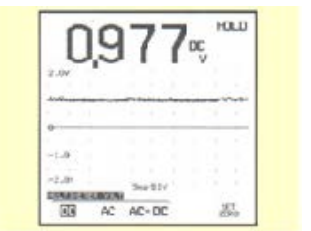

MAP sensor output

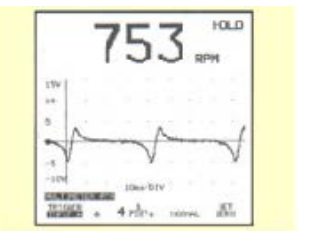

TDC signal

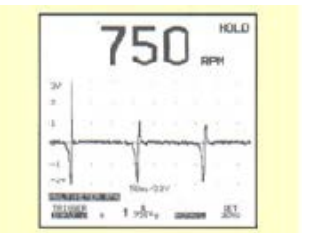

Camshaft position

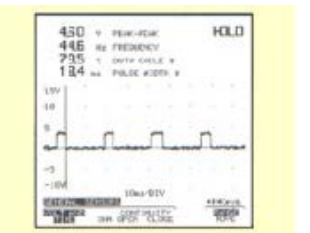

Signal to an ignition module

158. **Worksheet** Check ignition system components using data link/self-test/dedicated tester/scan tool and fault codes/readout.

OBD connections and test equipment in use

159. **Worksheet** Check ignition system problems resulting from failures of interdependent systems using data link/self-test/dedicated tester/scan tool and fault codes/readouts.

These two tests are carried out on engine management systems.

Dedicated Test Equipment The appropriate test equipment for the vehicle is connected and the diagnostic routine followed. Depending on the vehicle, the fault identification may be given as a code number of flashing lights or through an onboard computer connection that provides a diagnostic readout on the screen. It is important to carefully follow the manufacturer's instructions and procedures for the vehicle under test. Fix any problems found and then follow the prescribed procedure to reset the ECU memory. Finally carry out a road test and recheck the ECU memory to confirm that the fault has been fixed.

Scanner[5]

160. **Worksheets** Check fuel for contamination.

Inspect fuel system for leaks and condition of pipes and hoses.

This inspection should be carried out at all routine maintenance intervals. The inspection is mainly visual, but check for fuel odor under the vehicle and in the engine compartment as an indication of vaporization or a fuel leak.

Fuel tank, hoses and pipes

Fuel Pipes Carburetor fuel pipes have two different internal pressures: a vacuum before the lift pump and low pressure after the pump. There is a high pressure in all injection systems for both gasoline and diesel engines. Vapor lines on the fuel tank vent are usually at or close to atmospheric pressure. Pipes and hoses that are pressurized must be of the correct type and be maintained in good condition. Low pressure and feed pipes should be fully sealed to prevent air from being drawn into the system.

Carburetor fuel system

Injection fuel system

Inspecting Fuel Pipes and Hoses When inspecting fuel pipes and hoses, start under the vehicle with it raised to a suitable height to make a proper check. Use low-voltage lighting to examine shaded areas. Identify the pipes, hoses, fuel tank, filler and vent connections and the pipes for the evaporative fuel canister (EVAP).

Signs of Leakage Look at all of these fuel supply pipes, hoses and components for signs of leakage, which will show as a discoloration on or near the point of a leak. For gasoline, the fuel will vaporize and leave only a patch or slight stain to indicate a leak. Diesel fuel does not fully evaporate and leaves a wet stain, which can then be identified by smell. Smell is useful to check if a leak is fuel, engine oil or other fluid.

A leaking pipe

Corrosion, Perishing and Loose Joints Look at the condition of all fuel components. Look at pipes and hoses for damage, corrosion, degradation, and loose joints or clips. Rubber hoses may need to be replaced after a number of years. Check with the manufacturer's data for this, or replace these parts at 5-year intervals if signs of deterioration are noted. Many vehicle fires are caused by a hose or pipe splitting or becoming detached. Therefore, it is important to carry out these inspections with care and to assess the future life span of the part under inspection.

Look closely…

And check all…

Rubber hoses…

And pipes

161. **Worksheet** Carry out vacuum (manifold absolute pressure MAP) tests for operation of fuel-system sensors and emission-control systems.

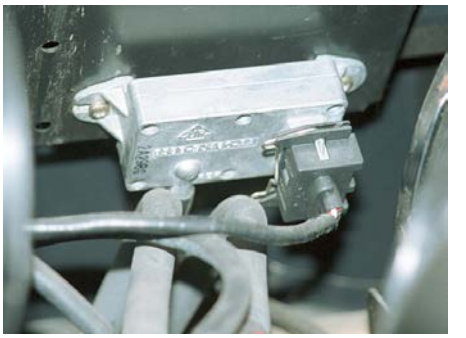
MAP sensor

This test must be carried out in accordance with the manufacturer's procedures. A general procedure is given on the worksheet and should be adapted to suit the particular vehicle being checked. Before checking the MAP sensor, check the condition of the vacuum hose connecting the inlet manifold to the sensor. Check that the hose is not blocked or kinked or restricting the vacuum in any way.

Vacuum Gauge Connect a T-piece to the hose in order to provide a take-off position for a vacuum gauge. Alternatively, fit a vacuum gauge and follow the procedures specified by the manufacturer. Run the engine and check that the vacuum reading is within specified tolerances for the test conditions.

MAP Sensor Turn off the engine and connect a vacuum/pressure pump and gauge to the MAP sensor. Connect a voltmeter or oscilloscope to the terminals specified in the test procedure. Turn on the ignition and compare the voltage or wave pattern with the manufacturer's specification. The MAP sensor should produce higher or lower readings as pressure varies. Use the vacuum and pressure pump to give a vacuum of 0.5 bars, which is equivalent to an absolute pressure of 0.5 bars. Note the change in the MAP sensor signal voltage and wave pattern. Repeat at different pressures and note the change in signal voltage. Compare the readings with the manufacturer's specifications.

Testing the MAP sensor with a voltmeter

Exhaust Gas Analysis To carry out an exhaust gas analysis, an analyzer is used. Modern analyzers give exhaust gas constituents in percentages or parts per million (PPM). The minimum requirement for engine tuning is a carbon monoxide (CO) reading, which will need to be within a specified tolerance for the vehicle. Typical CO readings are 0.1 percent to 1 percent for modern vehicles but can be up to 2.5 percent for some older types.

Analyzer screen

Four-Gas Analysis Gases that are measured for environmental regulations are carbon monoxide (CO) and hydrocarbons (HC) (which is given in PPM). Other gases measured are carbon dioxide (CO_2) and oxygen (O_2). These readings indicate the quality of the combustion and help to check that the electronic control is operating correctly. CO, HC, CO_2 and O_2 readings should be in accordance with manufacturer's data.

Analyzer Test To carry out the test, warm up and calibrate the analyzer. Warm up the vehicle engine to the normal running temperature. On all tests, a sensor probe is inserted into the exhaust. Adapters for exhaust extraction equipment are available and should be used in enclosed spaces. Follow the analyzer manufacturer's instructions for carrying out the test. Some analyzers have on-screen instructions and prompts for each step.

Analyzer testing

Probe in the exhaust pipe

162. **Worksheets** Check engine for misfire, uneven running, difficult starting, flat spots/hesitation, running on/dieseling, etc. (carburetor).

Check engine for misfire, uneven running, difficult starting, flat spots/hesitation, running on/dieseling, etc. (fuel injection).

These tasks require information from the vehicle driver and from running engine, gas analyzer and road tests.

Exhaust-Gas Recirculation It is important to eliminate engine mechanical, ignition and emission control, and, particularly, exhaust gas recirculation (EGR) faults before checking for fuel-system faults. The most important check is that the engine compressions are normal and there is a good, correctly timed spark in each cylinder. Check also that the engine warms up quickly and maintains a normal engine temperature.

Air and Fuel Filters Check that the air and fuel filters are clean and that air and fuel supplies are not obstructed. Also check that the air supply ducting and vacuum take-off pipes are not loose. This could allow air to be taken in after the airflow meter or throttle housing, which would be a problem.

Checking air…

And fuel filters

Engine Analyzer An engine analyzer should be connected in accordance with the engine manufacturer's instructions. Run preliminary checks for cylinder balance, ignition timing and spark plug performance. If these checks are correct, look for fuel-system faults.

Engine analyzer in use

Carburetor and Fuel- Injection Systems Fuel-system faults for both carburetor and fuel- injection systems will have a similar cause, although the components may be different. Misfire and uneven running may be caused by either too weak or too rich mixture strength. Unequal adjustment of multiple carburetors or defective operation of fuel injectors are also possible causes. These faults will show up as high or low CO readings on a gas analyzer. High CO indicates a rich mixture and low CO a weak mixture.

Carburetor

Fuel injector

Low CO

High CO

Electronic Fuel-Injection Engines For electronic fuel-injection engines, carry out a system check for fault readouts with appropriate equipment. Check injectors individually with a meter and calibrated containers to view spray patterns and fuel delivery.

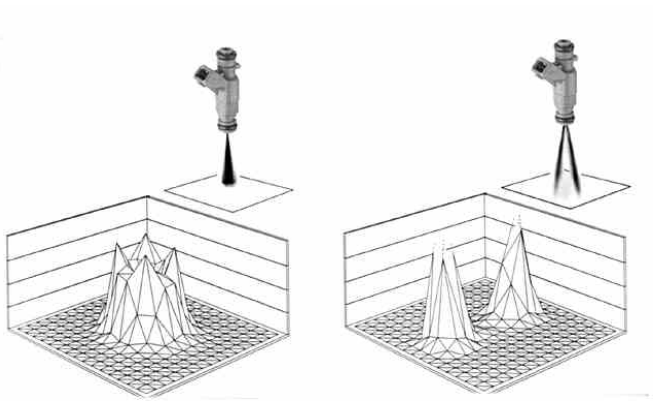
Injector spray patterns[3]

Cold Starting Difficult cold starting is usually caused by failure of the choke on carburetor engines and by the cold-start device on fuel-injection engines. Check the operation of cold-start devices and the basic settings for carburetor and fuel-injection systems. Modern injection systems extend injector pulse width for starting enrichment.

Hot Starting Difficult hot starting can be caused by fuel vaporization, incorrect starting procedures or incorrect adjustments. Hot starting using full throttle may help a carburetor engine. The temperature sensor is a possible source of problems on an injection vehicle.

Flat Spots and Hesitation - Fuel Injection Flat spots and hesitation on fuel-injection systems can be caused by incorrect sensor data to the ECU. Check the operation of all sensors but look carefully at the coolant temperature, airflow, throttle position and lambda sensors. Check all wiring and terminals for condition. Check fuel pressure.

Checking sensors…

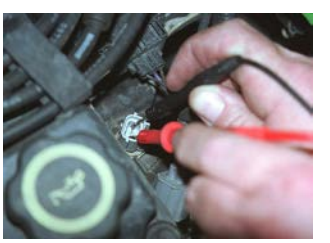
And terminals

Running On 'Running on' or 'dieseling' is usually caused by weak mixture strengths or high idle speed. This may be because an idle airflow or mixture jet or valve is not closing correctly. For carburetor engines, check that the mixture and basic settings are correct. Some carburetors are fitted with an anti-dieseling solenoid valve in the idle mixture drilling that bypasses the throttle plate. Check the operation of this solenoid valve.

Anti-dieseling valve

Electronic Fuel-Injection Systems Electronic fuel-injection systems are unlikely to show running-on faults. However, check the cold-start valve for leaks and the idle speed control valve for correct operation. On mechanical systems, look at the basic adjustment of the airflow sensor plate.

Idle speed...

Idle speed...

163. **Worksheet** Check operation of the fuel gauge, fuel-level indicator and low-fuel warning light.

A fuel gauge is not usually an accurate instrument but rather an indicator of fuel level in the fuel tank. A typical gauge circuit has a 10-volt electrical supply through a voltage stabilizer. Other stabilizer voltages may also be used. The sender unit in the fuel tank is a potentiometer or variable resistor fitted on the sender unit housing in the fuel tank. A rubbing contact is attached to a float lever. This completes the electrical circuit from the gauge to a ground point on the fuel tank.

Fuel gauge

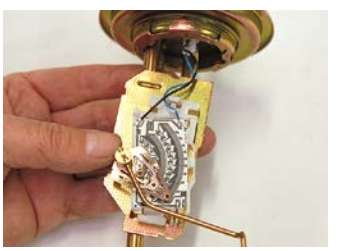
Sender unit resistor

Fuel Tank Sender Unit When the fuel tank is full, the rubbing contact is at the top of the potentiometer and the electrical resistance is low. When the tank is empty, the float rests on the bottom of the tank and the rubbing contact is at the low point on the potentiometer. This produces a high resistance and an empty reading on the fuel gauge.

Tank unit - full

Tank unit - empty

True Gauge Readings To check that these points are giving true gauge readings, disconnect the electrical terminal to the fuel gauge sender unit on the fuel tank. With the terminal disconnected and the ignition on, the gauge should read empty. Ground the terminal on the fuel tank and then on a good ground point on the vehicle body. Check that the gauge reads full in both cases. If the gauge reads correctly when on a good ground point, but not on the fuel tank, check the tank ground. This circuit will be either through a separate cable or through the tank, where it is bolted to the vehicle.

Sender Unit Checks If the gauge reads full and empty during the tests but not when connected to the sender unit, remove and check the sender unit. Use a multimeter set on the ohms scale. If the gauge does not respond to the ground tests, check that there is an electrical feed to the sender unit. If not, check fuses and electrical connection in the circuit. If a live feed is found at the gauge unit, remove and inspect the gauge unit for continuity and resistances. Carry out similar tests for the low-fuel warning light.

Sender resistance full

And empty

164. **Worksheet** Check fuel system components using data link/self-test/dedicated tester/scan tool and fault codes/readout.

165. **Worksheet** Check fuel system problems resulting from failures of interdependent systems using data link/self-test/dedicated tester/scan tool and fault codes/readouts.

These two tests are carried out together on engine management systems. Sensor signals are used by a number of systems within the electronic control unit (ECU). Test sequences for engine management systems will cover all systems connected to, or controlled by, the ECU. Fuel-system faults or problems should be isolated with the appropriate test procedure.

Check Engine Warning Light The indication that a fault exists will probably be a warning light on the vehicle instrument panel. This may come on before the fault has developed sufficiently to affect engine performance. The appropriate test equipment for the vehicle is connected and the diagnostic routine followed. It is important to carefully follow the manufacturer's instructions and procedures for the vehicle under test. Fix any faults found and then follow the prescribed procedure to reset the ECU memory. Finally, carry out a long road test and recheck the ECU memory to confirm that the fault is no longer identified.

Fault light on dash

System checks

Check fuel for contamination Fuel can be contaminated in three ways. These are water, dirt particles, and by adding the wrong fuel to the tank. Water is a problem for gasoline vehicles, and, in particular, carburetor engines because the water does not pass easily through the very small drillings in the fuel jets. Early symptoms are misfiring, stalling at idle speeds and difficult starting. The pressurized gasoline fuel-injection systems are more tolerant of a little water contamination. Diesel vehicles are fitted with a water separator, which should be drained regularly.

Fuel sample contaminated with water

166. **Worksheet** Check emission system components using data link/self test/dedicated tester/scan tool and fault codes/readout.

167. **Worksheet** Check emission system problems, resulting from failures of interdependent systems, using data link/self test/dedicated tester/scan tool and fault codes/readouts.

These tests are carried out on vehicles with electronic control systems that can be interrogated via diagnostic connectors and specialist equipment. Follow the manufacturer's test procedures for connecting and carrying out these tests.

168. **Worksheet** Inspect the drive belt condition and tension

Damaged belt

Inspect the water pump bearings and seal for wear and leakage. Check the operation of the cooling fan and airflow through the radiator. Always look closely at drive belts for signs of fraying, cracks, glazing on the drive faces and for other deterioration. Old drive belts feel solid when they are cold but can become elastic when hot. Check the belt under normal operating conditions with the engine hot.

Belt Tension Check the tension on the longest side. For vee belts, a pull of about 13 mm, (or an inch) is normal. Over tightening can damage the water pump and alternator bearings. Under tension can cause the belt to slip. A squeal from the belt when the engine is accelerated indicates slack drive belt tension.

Multi-Vee Belts Multi-vee, or ribbed belts, and toothed camshaft drive belts will twist through about 90° if they are correctly adjusted. However, always refer to the manufacturer's data for the correct tension, and the checking and adjustment procedure.

Checking multi-vee belt tension

Water Pump Noise Listen for a whine from defective water pump bearings when the engine is running. Use a stethoscope to locate the noise, if necessary.

Water Pump Bearings Another check is to grasp the water pump spindle drive pulley and rock it to feel free play in the bearings. There should not normally be any free play. Look closely at the underside of the water pump for signs of leakage.

Cam Belt Driven Pumps Where the water pump is hidden underneath a belt cover, check whether the owner or driver has noticed a coolant loss. Carry out a long pressure test and look for coolant dripping from behind the cover.

Cam belt cover

Motor Bearings Disconnect the battery ground before checking the fan and bearings of electrically driven fan motors. The check is made by rocking the fan and feeling for free play.

Cooling Fans Look closely at all fans for damage to the blades and for correct attachment to the hub. A fan that is out of alignment or balance will create vibration and premature wear of water pump or motor bearings.

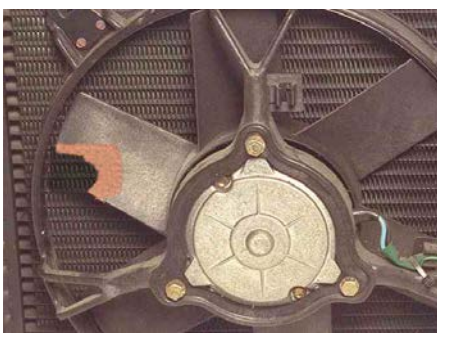
Fan blade damage

Airflow With the engine is running, check that the airflow from the fan is correct. For viscous hub fans, the airflow when the engine is hot should be greater than when the engine is cold. For electrically driven fans, the switch should start the motor when the engine temperature is slightly above normal.

Radiator Look through the airways in the radiator core to check that they are not blocked with dust and dirt. If necessary, blow back through the radiator core with an airline to remove dead insects and other material.

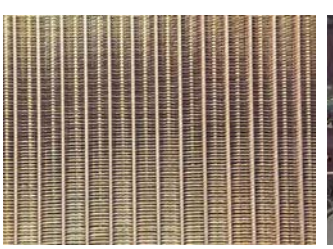
Radiator core

Air line blowing through radiator core

169. **Worksheet** Check the system operating temperature and check the thermostat opening temperature.

When the engine is started from cold, the coolant should not circulate through the top hose. Feel the hose during the warm phase and check that it remains cool. Compare it with the heater hoses, which should heat up gradually as the engine warms up. When the engine reaches operating temperature, the thermostat should open and allow the coolant to flow through the top hose into the radiator.

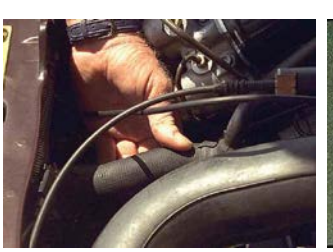
Feeling top hose temperature

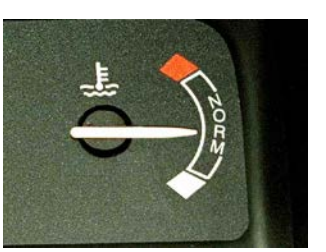

Temperature gauge

Thermostat Checking The thermostat can be checked after removal from the engine. The thermostat is placed in a tester, which has an electric heater element and thermometer in a container of water. The water is heated until the thermostat opens. The temperature reading on the thermometer indicates the opening temperature. This can be compared with the specifications stamped on the thermostat and given in the manufacturer's data.

Thermostat test

Renew if in any doubt

Summary Engine performance is adversely affected if the engine, ignition, fuel, air supply and exhaust system are not in good working order. Keep your customers' cars running well.

Off into the sunset…[2]

Read the previous section again and note down some key bullet points here:

-
-
-
-
-

Automatic Transmission and Transaxle

Safety, tools & equipment and customer care

Health and Safety

Safety First Before carrying out any service or repair work, refer to all appropriate health and safety guidelines. Always follow all safety procedures and observe safety precautions when working on vehicles. Some specific hazards are listed in this section. General safety advice is also included.

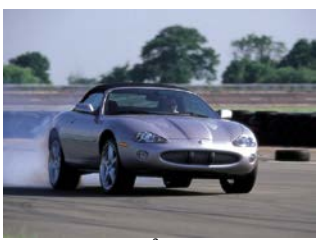
Be smart, be safe[2]

Check safety procedures

Running Engines Running engines are sometimes needed for diagnostics and system checks. A running engine presents two hazards. The rotating components pose a risk and the accumulation of exhaust gas in the workshop can be deadly. Remain aware of rotating parts such as the fan, belt and pulleys in the areas where you are likely to be working.

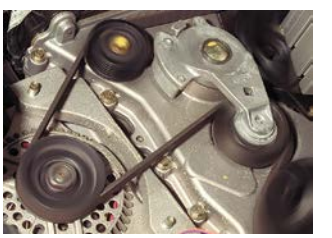
Take care of moving parts

Electrically Driven Fans An electrically driven fan is switched on automatically when the temperature of the coolant in the radiator rises above the switch operating temperature. This can occur even when the ignition is switched off. During diagnostic tests, always keep fingers out of the fan cowl and always remove the battery ground cable when the engine does not need to be running.

Exhaust Emissions When running an engine, it is important to prevent the build-up of exhaust gas in the workshop. Use extraction equipment or provide good ventilation.

Extraction equipment

Hot Components When used for prolonged periods, vehicle components can become very hot. In particular, be careful not to touch the exhaust when working under the vehicle or on the engine.

Be aware of hot exhausts

Protective Clothing Overalls should ideally be worn at all times. This protects your clothes as well as your skin. Gloves, goggles, breathing masks, hats and strong footwear may also be necessary.

Personal protective equipment in use

Working Below Vehicles There are a number of hazards to avoid when working under vehicles. One is the very high temperature of exhaust, which can cause severe burns. Another risk is the possibility of getting rust and dirt in the eyes. Avoid these problems by keeping clear of hot surfaces and by wearing goggles. The vehicle must be supported safely before working underneath or alongside it.

Car on a ramp

Bump caps protect you head

Heavy Loads Tasks that require the lifting and moving of heavy loads also pose risks. Many vehicle components fall into this category. Always tackle these tasks in an appropriate manner by ensuring the use of the recommended lifting equipment. Ask for assistance if necessary. Even some propshafts can be difficult to handle.

Steering box

Engine

Auto gearbox[2]

Wheel

Jacking and Supporting Only use the recommended jacking and support points when lifting a vehicle. Refer to the manufacturer's instructions if unsure. Be sure the jack and support stands, which must be used at all times, have an appropriate safe working load (SWL).

acking point

Support point

Wheel free bars

Axle stands

Skin Contact When servicing vehicle systems, avoid skin contact with new and used engine oils. Use barrier cream or non-porous gloves. Be careful with hot oil, particularly when carrying out oil draining operations. Never keep oily rags in overall or other pockets and change out of oil contaminated clothing as soon as reasonably possible.

Wear gloves or use barrier cream

Caution/Attention/Achtung! All types of fuel – and particularly the vapors – are highly flammable. They can be ignited from a number of sources. Any exposed flame, a short circuit, a cigarette or, under the right conditions, even a hot object will start a fire.

Original Equipment In consideration of other people's property, always be careful to use approved parts. Original equipment manufacturer's (OEM) parts may be required to meet safety regulations..

Rotating Driveline Components 💻 The Ferrari shown here was tested on a rolling road. It was being driven at well in excess of 100 mph! Note how important it is to ensure all driveline components are in good order.

Electrical Sparks 💻 The most common cause of vehicle fires in the workshop is from electrical sparks. These can occur during the connection and removal of electrical terminals. Sparks also occur when the engine is cranked with the ignition on and the spark plugs removed. Disconnect the coil or connect the HT cables directly to ground to prevent this.

Short Circuits 💻 If a wire or tool is allowed to join the battery's positive connection to the negative connection, a serious short circuit will result. A wire would become extremely hot and, in addition to the obvious fire risk, would burn through whatever part of your body it was touching it. The demonstration shown here was carried out by fully trained experts. Do NOT attempt to copy it. The same results occur if shorts are made on the vehicle. Be careful.

Original Equipment In consideration of other people's property, always be careful to use approved parts. Original equipment manufacturer's (OEM) parts may be required to meet safety regulations.

Use good quality parts

Refrigerant Refrigerant used in air conditioning systems is dangerous. If it comes in contact with the skin, it produces severe frostbite. Wear protective goggles and gloves at all times. Use gloves designed for the purpose; leather or fabric gloves are NOT suitable. If refrigerant is exposed to exposed flames or hot surfaces, it produces toxic gases. Always ensure adequate ventilation when working on air-conditioning systems.

Air conditioning unit and equipment

Pressurized Cooling Systems If work has to be done on the vehicle heater or the cooling system, there is a risk of scalding. The coolant is run at a pressure higher than atmospheric. If the cap is removed when hot, the coolant can boil instantly, spewing boiling water and steam.

Rotating Driveline Components The Ferrari shown here was tested on a rolling road. It was being driven at well in excess of 100 mph! Note how important it is to ensure all driveline components are in good order.

Transmission Wind Up On four-wheel drive vehicles, it is possible for the transmission to "wind up" when the front and rear axles are locked together. This is because the two axles may run at slightly different speeds. On rough ground, this is not a problem because the bouncing and movement allows the tires to slip. On hard surfaces, however, a twist or "wind up" of the components (such as driveshafts) occurs. When the vehicle is jacked up, the transmission can unwind suddenly causing serious injury. This does not occur on vehicles with an unlocked center differential or a viscous drive.

Read the previous section again and note down some key bullet points here:

-
-
-
-
-

Tools and Equipment

Introduction Components will usually be removed, inspected and repaired or replaced when a defect has been diagnosed. Other components are replaced, or stripped and cleaned, at scheduled mileage or time intervals. Refer to the Routine Maintenance section for details on these items.

Good tools and equipment are important[1]

Recommended Procedures The descriptions provided in this section deal with the components for individual replacement, rather than as a part of other work. Always refer to a workshop manual before starting work. You will also need to look for the recommended procedure, special tools, materials, tightening sequences and torque settings. Some general and specific tools and pieces of equipment are described on the following screens.

Refer to data as required

General Toolkit General tools and equipment will be required for most tasks.

Snap-on tools[5]

Torque Wrench A good torque wrench is an essential piece of equipment. Many types are available but all work on a similar principle. Most are set by adjusting a screwed cylinder, which forms part of the handle. An important point to remember is that, as with any measuring tool, regular calibration is essential to ensure it remains accurate.

A torque wrench is a useful tool[5]

Air Guns The whole point of power tools is that they do the work so you don't have to. Most air guns have an aluminum housing. This material is lightweight but has a long life. Air guns produce a "hammer" action. Because of this, impact sockets should be used. Normal sockets can shatter under this load. It is important to remember that air tools need lubricating from time to time.

Jacks and Stands Most jacks are simple hydraulic devices. Remember to make sure the safe working load (SWL) is not exceeded. Ensure that any faults with equipment such as this are reported immediately. Axle stands must always be placed under the vehicle supporting the weight – before work is carried out.

Use stands after jacking a vehicle[5]

Ramps and Hoists Many ramps are available ranging from large four-post, wheel-free types to smaller single-post lifts. These large items should be inspected regularly to ensure they are safe.

Four post lift in use

Transmission Jack If a complete gearbox has to be removed, it is likely to be heavy! A transmission jack has attachments that allow you to support the gearbox and lower it safely. The equipment is hydraulically operated just like an ordinary jack. Often, the height can be set by using a foot pedal, which leaves both hands free for positioning the unit.

This jack will support a gearbox[5]

Bearing Puller Removing some bearings is difficult without a proper puller. For internal bearings, the tool has small legs and feet that hook under the bearing. A threaded section is tightened to pull out the bearing. External pullers hook over the outside of the bearing and a screwed thread is tightened against the shaft.

Internal and external bearing pullers[5]

Air Ratchet These tools are very useful for removing or fitting nuts and bolts. However, it is possible to over tighten if you are not careful. Air tools can be very powerful. Take adequate precautions at all times.

These tools are very useful[5]

Slide Hammer A slide hammer is a form of puller. It consists of a steel rod over which a heavy mass slides. The mass is 'hammered' against a stop, thus applying a pulling action. The clamp end of the tool can screw either into, or onto, the component. Alternatively, puller legs with feet are used to grip under the sides of the component.

This tool is useful for removing halfshafts[5]

Grease Gun A grease gun is a simple device that pumps grease under pressure. A special connector fits onto a grease nipple. Some types are air operated but the one shown here is a simple pump-action type.

Some older UJs can be lubricated[5]

Read the previous section again and note down some key bullet points here:

-
-
-
-
-

Test Equipment

Introduction Some special test equipment is used when working with different systems. Remember, you should always refer to the manufacturer's instructions for the equipment you are using.

Refer to the manufacturer's instructions

Pressure Gauge This is a standard type of gauge but with suitable adapters for connection to a gearbox. The second picture here shows where various tests can be carried out on an automatic gearbox.

Gauge

Test points

Vacuum Gauge Some automatic gearboxes use vacuum to operate actuators. In addition, engine load can be sensed by measuring vacuum. The simple gauge and pump shown here can be used for these and other similar tasks.

Snap-on vacuum gauge[5]

Tachometer Some automatic gearboxes use vacuum to operate actuators. In addition, engine load can be sensed by measuring vacuum. The simple gauge and pump shown here can be used for these and other similar tasks.

Tachometer connected to the ignition coil

Dedicated Test Equipment Modern electronically controlled systems, (transmission being no exception) are able to store fault codes in the memory. This is particularly useful when the occurrence of the fault is intermittent. However, to access this information, specialized equipment is often required. This video shows a Ford system. It is programmed for a specific task and then taken to the vehicle and connected to a special port. On-screen instructions then help the technician run through a series of tests.

Dial Test Gauge A dial-test gauge or dial-test indicator (DTI) is a useful piece of measuring equipment. It is usually used in conjunction with a magnetic stand. As the needle is moved, the dial (via a series of accurate gears) indicates the distance traveled. The graduations are either hundredths of a millimeter or thousandths of an inch.

DTI and Stand

Torque Wrench A good torque wrench is an essential piece of equipment. Many types are available but all work on a similar principle. Most are set by adjusting a screwed cylinder, which forms part of the handle. An important point to remember is that, as with any measuring tool, regular calibration is essential to ensure it remains accurate.

A torque wrench is a useful tool[5]

Angle Locator This magnetic device is used to check that the angles of a propshaft are equal. This is important because it ensures that the changing velocity effects of the universal joints are canceled out. The angle locator attaches magnetically to the shaft. A dial is set to zero and then, when it is moved to a new location, the difference in angle is indicated.

This device checks propshaft angles[5]

Accuracy To ensure measuring equipment remains accurate, there are just two simple guidelines:

Take care of your equipment – test equipment thrown on the floor will not be accurate.

Ensure instruments are calibrated regularly. This means checking them against other equipment known to be in good working order.

Torque wrench in use

Read the previous section again and note down some key bullet points here:

-
-
-
-
-

Customer Care

Regular Checks Regular servicing is vital for a customer's safety. Carry out checks at all services and report your findings to the customer. Advise customers if anything will need attention before the next scheduled service interval.

Explain any unusual conditions

Vehicle Condition Respect your customers' vehicle and take precautions to keep them clean. Checking and repairing the clutch is likely to involve you working under the vehicle, and then sitting in the driver's seat. Use seat covers and ensure the steering wheel is cleaned when you have finished.

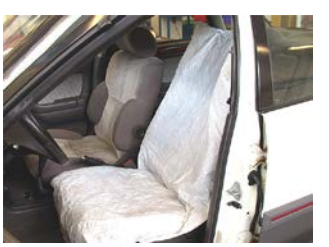

Seat covers in use

System Operation Many vehicle systems are complicated in the way they work – but quite simple to use! However, some automatic transmission systems have settings that may be unfamiliar to your customers. Help them understand, with the aid of the manual and handbook, how to get the best out of these systems. For example, explain how performance is different between sport and economy modes on systems fitted with this option.

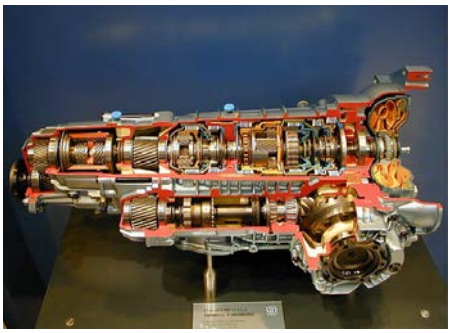
Automatic transmission

Correct Fluids and Oils A wide range of fluids is used in automatic transmission systems. Some include special friction reducers. If the wrong fluid is put into the system, the following results are all possible:

The system may work incorrectly

The system will work but performance will be reduced

Serious and expensive damage will result.

The choice is obvious! Make sure your customers know about this.

Automatic transmission fluid

Describing Noise Driveline problems often result in unusual noises from the vehicle as it is used. Noise is very difficult to describe! However, the following screen describes some useful terms. These may be useful when discussing problems with your colleagues or customers.

Listening for noise

Noises 💻 'Howling' or 'whining' tend to be noises associated with gears. Such sounds can occur at various speeds and driving conditions or they may be continuous. ”Chuckle” is a rattling noise that sounds like a stick held against the spokes of a spinning bicycle wheel. It usually occurs while decelerating. ”Knock” is very similar to “chuckle” though it may be louder and occurs during acceleration or deceleration.

Causes of Noise Clicking, popping or grinding noises may be noticeable at low speeds and be caused by:

Showing a customer the CV gaiter

Inner or outer constant-velocity joints worn (often due to lack of lubrication so check for split gaiters)

Loose driveshaft

Another component coming in contact with a drive shaft

Damaged or incorrectly installed wheel bearing, brake or suspension components.

Vibration The following problems may cause vibration at normal road speeds:

Damaged tire

Out-of-balance wheels

Out-of-round or damaged tires.

The following may cause shudder or vibration during acceleration:

Damaged powertrain/drivetrain mounts

Excessively worn or damaged outboard or inboard constant-velocity joints.

Adjustment If idle speed is set too high on an automatic transmission system, the car will start to move as soon as a gear is selected. Often this is an easy adjustment. Make sure your customers report this type of symptom.

Idle speed adjustment may be necessary

Summary A customer who is kept informed and treated with respect will return and keep you in a job! Explain things to customers when asked. Such courtesy will be appreciated.

Read the previous section again and note down some key bullet points here:

-
-
-
-

Theory and technology

Transmission System Overview

Introduction Transmission is a general term used to describe all of the components required to transmit power from the engine to the wheels. The requirement is to convert the power from the relatively high velocity and low torque of the engine crankshaft to the variable, usually lower speed and higher torque needed at the wheels. This first section is a general introduction to the transmission system.

Types of Transmission The two basic types of transmissions use either a manual gearbox, in which the driver selects the gears, or an automatic gearbox, in which the gears are changed automatically. The other driveline components, with the exception of the clutch, are the same for automatic or manual systems.

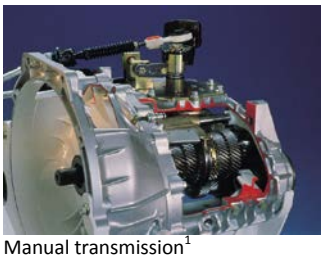
Manual transmission[1]

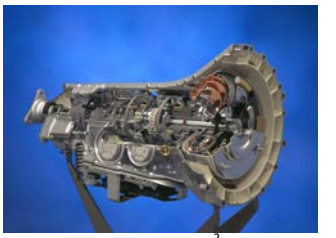
Automatic transmission[2]

Front-Wheel Drive Transmission Working from the engine to the wheels, the main components of a typical front-wheel drive transmission system are as follows:

Clutch

Gearbox

Final drive

Differential

Drive shafts.

Clutch

Gearbox

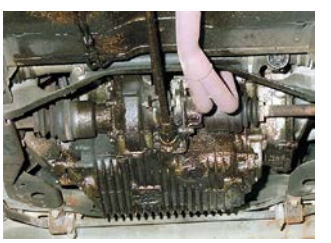
Final drive and differential

Driveshaft

Rear-Wheel Drive Transmission Working from the engine to the wheels, the main components of a typical rear-wheel drive transmission system are as follows:

Clutch

Gearbox

Propshaft

Final drive

Differential

Half shafts.

Clutch

Gearbox

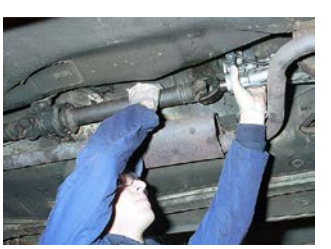
Propshaft

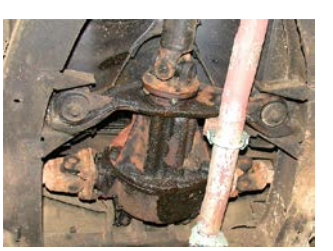
Final drive and differential

Clutch The clutch is fitted between the engine and gearbox. It allows the drive to be disconnected when the pedal is depressed. This is often described as temporary neutral. The clutch also allows a smooth take up of drive and gears to be changed.

Manual Gearbox 💻 A manual gearbox is a box full of gears of varying ratios! The driver selects the gear ratio most suitable for driving conditions. Most boxes contain about 13 gear cogs, which allow five forward gears and one reverse gear.

Torque Converter A manual gearbox is a box full of gears of varying ratios! The driver selects the gear ratio most suitable for driving conditions. Most boxes contain about 13 gear cogs, which allow five forward gears and one reverse gear.

Details of a torque converter

Automatic Gearbox As the name suggests, this is a gearbox, which operates automatically. Most types contain special gear arrangements, known as epicyclic gear trains. Some now use complicated electronic control, but the basic principle is that fluid pressure from a pump, which changes with road speed, is used to change the gears.

Final Drive To produce the required torque at the road wheels, a fixed gear reduction from the high engine speed is required. The final drive consists of just two gears with a ratio of about 4:1. These are bevel gears on rear-wheel drive systems and normal gears on front-wheel drive.

Differential and final drive combination

Differential The differential is a special combination of gears, which allows the driven wheels of a vehicle to rotate at different speeds. When a car makes a turn, the outer wheel has to travel a greater distance than the inner, and hence must rotate at a faster speed. If this was not possible, the drive would “wind-up” and would break!

Driveshafts Two driveshafts are used to pass the drive from the outputs of the final drive to each wheel. Each driveshaft contains two constant-velocity joints. These joints are covered with a rubber boot to keep out water and dirt.

This shaft transmits drive to the wheels

Propshaft On rear-wheel drive vehicles, the drive has to be transferred from the gearbox output to the final drive and differential unit in the rear axle. The propshaft (short for propeller shaft) is a hollow tube with a universal joint at each end. If removed, the universal joints (UJs) must be realigned correctly. A UJ is like a cross with a bearing on each leg. It allows drive to be transmitted through an angle. This allows for suspension movement.

Constant Velocity Joint The constant-velocity joint is a bit like a UJ. It is used on front-wheel drive, driveshafts. It allows a smooth, constant-velocity drive to be passed through, even when the suspension moves up and down and the steering moves side to side.

CV joint

Summary The gearbox is clearly a key part of the transmission system. However, it must work in conjunction with other parts. All should be operating correctly for optimum performance.

Gearbox in use[2]

State the purpose of the final drive gears on a rear wheel drive vehicle.

Read the previous section again and note down some key bullet points here:

-
-
-
-
-

Torque Converter

Introduction An automatic gearbox contains special devices that automatically provide various gear ratios, as they are needed. Most automatic gearboxes have three or four forward gears and one reverse gear. Instead of a gearshift, the driver moves a lever called a selector. Most automatic gearboxes now have selector positions for Park, Neutral, Reverse, Drive, 2 and 1 (or 3, 2 and 1, in some cases). The fluid flywheel or torque converter is the component that makes automatic operation possible.

Gear selector[2]

Safety Circuit The engine will only start when the selector is in either the park or neutral position. In park, the driveshaft is locked so that the drive wheels cannot move. It is also now common, when the engine is running, to only be able to move the selector out of park when brake pedal is pressed. This safety feature prevents sudden, uncontrolled movement of the vehicle.

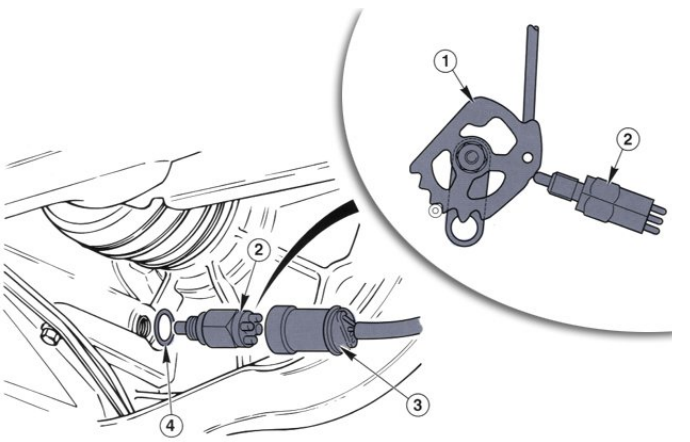

Starter circuit has an inhibitor switch[1]

Automatic Gearbox For ordinary driving, the driver moves the selector to the "Drive" position. The transmission starts out in the lowest gear and automatically shifts into higher gears as the car picks up speed. The driver can use the lower positions of the gearbox for going up or down steep hills or driving through mud or snow. When in position 3, 2, or 1, the gearbox will not change above the lowest gear specified. A modern automatic gearbox used on rear-wheel drive vehicles is shown here.

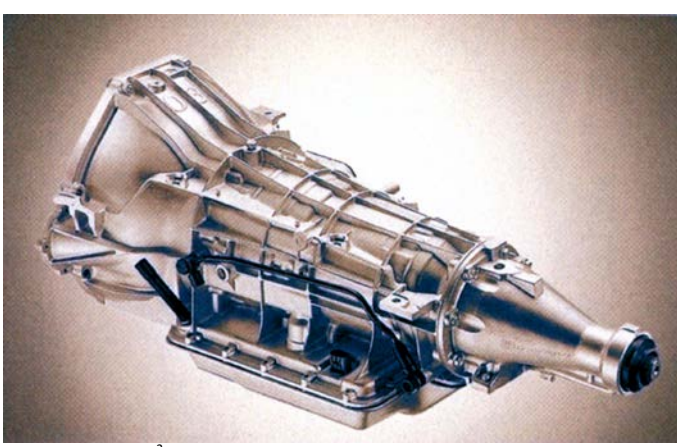

Modern auto-box[2]

Fluid Flywheel 💻 A fluid flywheel consists of an impeller and turbine, which are immersed in oil. They transmit drive from the engine to the gearbox. The engine-driven impeller faces the turbine, which is connected to the gearbox. Each of the parts, which are bowl-shaped, contains a number of vanes. They are both a little like halves of a hollowed-out orange facing each other. When the engine is running at idle speed, oil is flung from the impeller into the turbine, but not with enough force to turn the turbine.

Fluid Flywheel Operation As engine speed increases so does the energy of the oil. This increasing force begins to move the turbine and thus the vehicle. The oil gives up its energy to the turbine and then recirculates into the impeller at the center, starting the cycle over again. As the vehicle accelerates, the difference in speed between the impeller and turbine reduces until the slip is about 2 percent.

Fluid Flywheel Development One problem with a basic fluid flywheel is that it is slow to react when the vehicle begins to move. This can be improved by fitting a reactor or stator between the impeller and turbine. We now know this device as a torque converter. All modern cars, fitted with automatic transmission, use a torque converter.

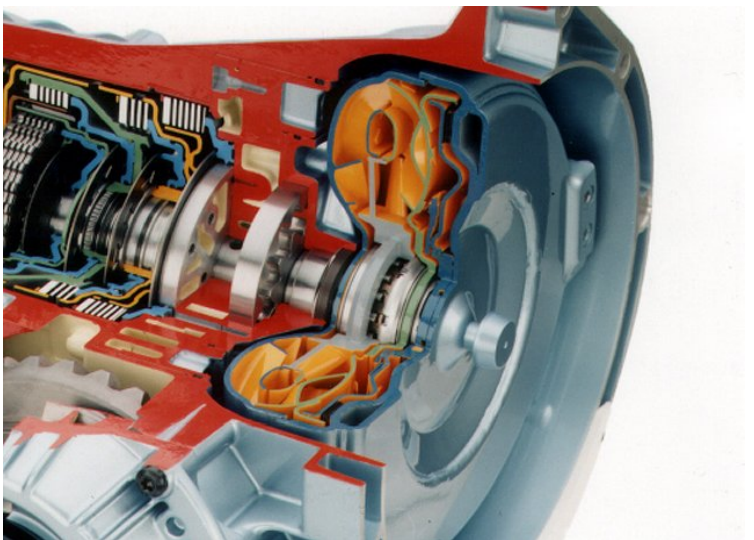

Torque converter[2]

Torque Converter The torque converter delivers power from the engine to the gearbox like a basic fluid flywheel, but also increases the torque when the car begins to move. Similar to a fluid flywheel, the torque converter resembles a large doughnut sliced in half. One half, called the pump impeller, is bolted to the drive plate or flywheel. The other half, called the turbine, is connected to the gearbox input shaft. Each half is lined with vanes or blades. The pump and the turbine face each other in a case filled with oil. A bladed wheel called a stator is fitted between them.

Converter Operation The engine causes the pump (impeller) to rotate and throw oil against the vanes of the turbine. The force of the oil makes the turbine rotate and sends power to the transmission. After striking the turbine vanes, the oil passes through the stator and returns to the pump. When the pump reaches a specific rate of rotation, a reaction between the oil and the stator increases the torque. In a fluid flywheel, oil returning to the impeller tends to slow it down. In a torque converter, the stator or reactor diverts the oil toward the center of the impeller for extra thrust.

Speed Difference When the engine is running slowly, the oil may not have enough force to rotate the turbine. However, when the driver presses the accelerator pedal, the engine runs faster and so does the impeller. The action of the impeller increases the force of the oil. This force gradually becomes strong enough to rotate the turbine and move the vehicle. Torque converters can double the applied torque when the vehicle begins to move. As engine speed increases, the torque multiplication tapers off until, at cruising speed, there is no increase in torque. The reactor or stator then freewheels on its one-way clutch at the same speed as the turbine.

Converter Housing and Impeller The converter housing is bolted to the crankshaft and driven directly. It is welded to the impeller and filled with automatic transmission fluid. The impeller:

Is welded to the converter housing
Has blades arranged radially
Turns at the same speed as the engine

Transmits fluid to the turbine blades and, as a result, produces a radial force at the turbine.

mpeller

Turbine The turbine is splined to, and drives, the transmission input shaft. It has blades arranged in a curved pattern, which allows fluid to flow inward due to the reduced centrifugal force (as compared with the impeller). The fluid is then passed to the stator.

Stator with Roller One-Way Clutch The purpose of the stator is to deflect the stream of fluid into the impeller until the coupling speed ratio is reached. The stator and one-way clutch assembly are located between the impeller and the turbine. It is splined on the stator support, which is locked to the fluid pump housing and hence to the transmission housing. The stator has blades arranged in a curved pattern. It locks, counter to the normal direction of rotation of the engine, and runs freely in the normal direction of rotation of the engine. The purpose is to boost torque, through ram pressure, up to the coupling point. It flows from the rear until a turbine-to-impeller speed ratio of 85 percent is reached. The stator then rotates with the converter.

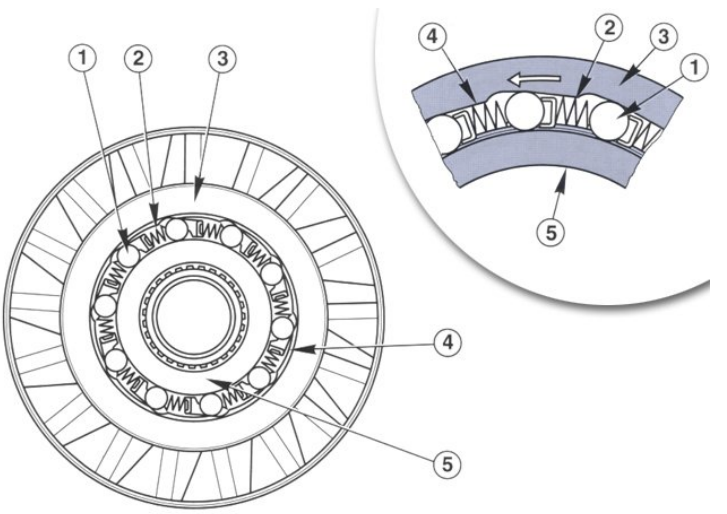

Stator operation[1]

Torque Converter Lock-Up The fluid flywheel action of a torque converter or fluid flywheel reduces efficiency because the pump tends to rotate faster than the turbine. In other words, some slip will occur. This is usually about two percent. To improve efficiency, many transmissions now include a lock-up facility. When the pump reaches a specific rate of rotation, the pump and turbine are locked together, allowing them to rotate as one.

Converter Lock-Up Clutch The converter lock-up clutch allows slip-free and, therefore, loss-free transmission of the engine torque to the automatic transmission. When engaged, it creates a frictional connection between the converter housing and the turbine. It consists of a clutch pressure plate with a friction lining, and torsional vibration damper to damp the crankshaft torsional vibrations. It is connected positively to the turbine and is exposed to fluid pressure from one side for clutch disengagement and engagement. A modulating valve is often used to allow controlled pressure buildup and reduction. This is to ensure smooth opening and closing. The valve is controlled electronically by means of the transmission ECU.

Torque converter

Summary The purpose of the torque converter and lock-up clutch can be summarized as follows:

Transmit engine torque
Boost torque, particularly when vehicle begins to move

Bypass the torque converter to increase the efficiency of the automatic transmission.

State the purpose of a torque converter.

State the purpose of the torque converter lock-up clutch.

Read the previous section again and note down some key bullet points here:

-
-
-
-
-

Automatic Transmission Components

Introduction The main parts of the automatic transmission system are the:

Torque converter with converter lock-up clutch

Fluid pump with stator support

Planetary gear train with clutches and brakes

Intermediate gear stage

Final-drive assembly (if FWD)

Control unit or valve body assembly.

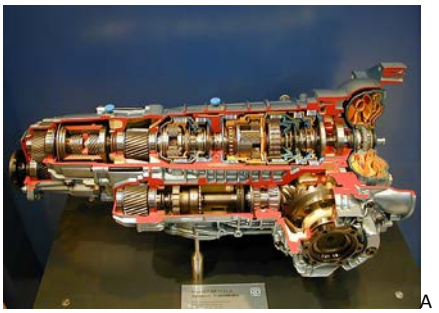

Automatic transmission

Epicyclic Gearbox Operation Epicyclic gears are a special set of gears that are part of most automatic gearboxes. In their basic form they consist of three main elements:

A sun gear, located in the center

The carrier that holds two, three, or four planet gears, which mesh with the sun gear and revolve around it

An internal gear or annulus, which is a ring with internal teeth; it surrounds the planet gears and meshes with them.

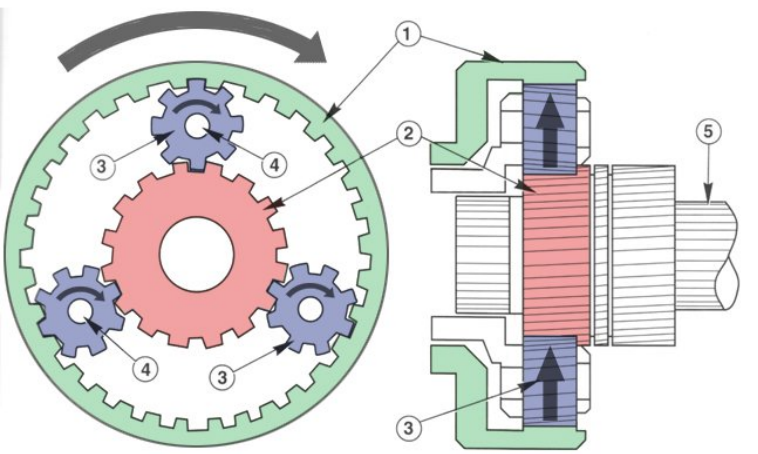

Epicyclic gears[1]

Planetary Gears Any part of a set of planetary gears can be held stationary or locked to one of the others. This will produce different gear ratios. Most automatic gearboxes have two sets of planetary gears that are arranged in line. This provides the necessary number of gear ratios.

Automatic Transmission System As the gear selector is moved into different positions, the power flow through the gearbox changes. All of the components shown on this screen are the same as those on the next screen. However, to save space, the labels are not shown so you may need to return here to check details of the power flow.

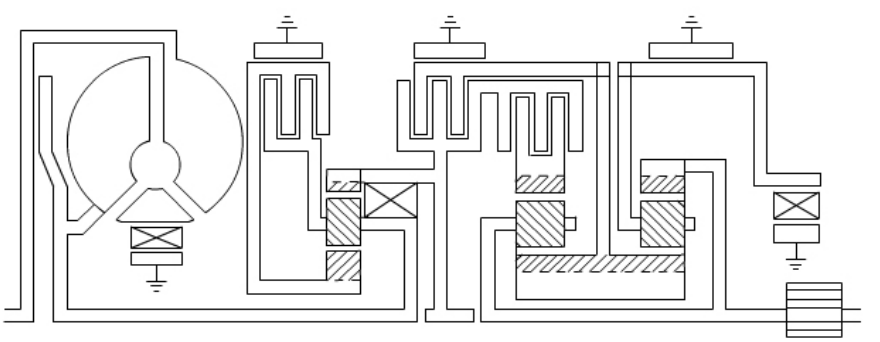

Gearbox internal components[1]

Power Flow The power flows shown here are a representation of what occurs in an auto-box. Note, in particular, that only the top half is shown! In other words, the complete picture would include a reflection of what is represented here. Click each button to see the different power flows through the box.

Valves and Brake Bands The appropriate elements in the gear train are held stationary by a system of hydraulically operated brake bands and clutches. These are worked by a series of hydraulically operated valves, usually in the lower part of the gearbox.

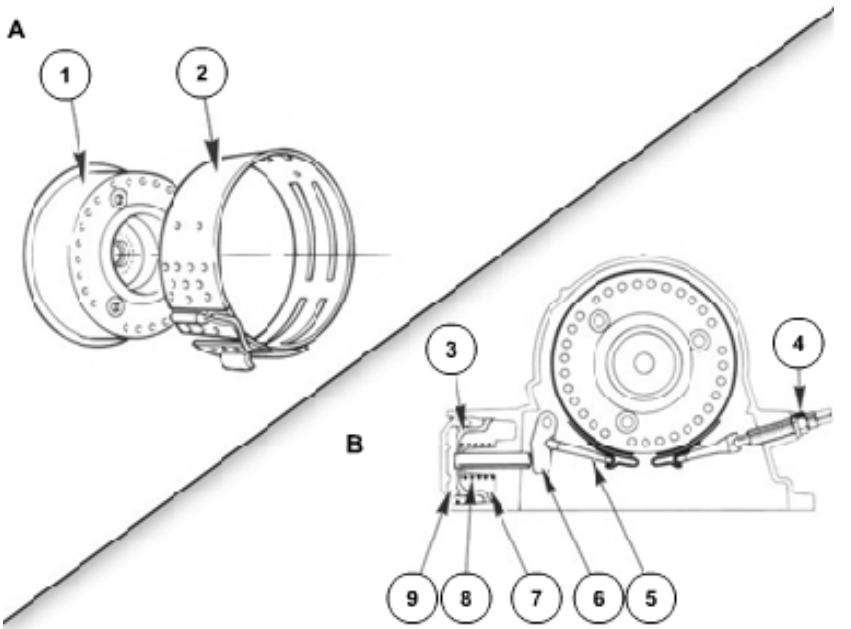

Brake bands lock different components[1]

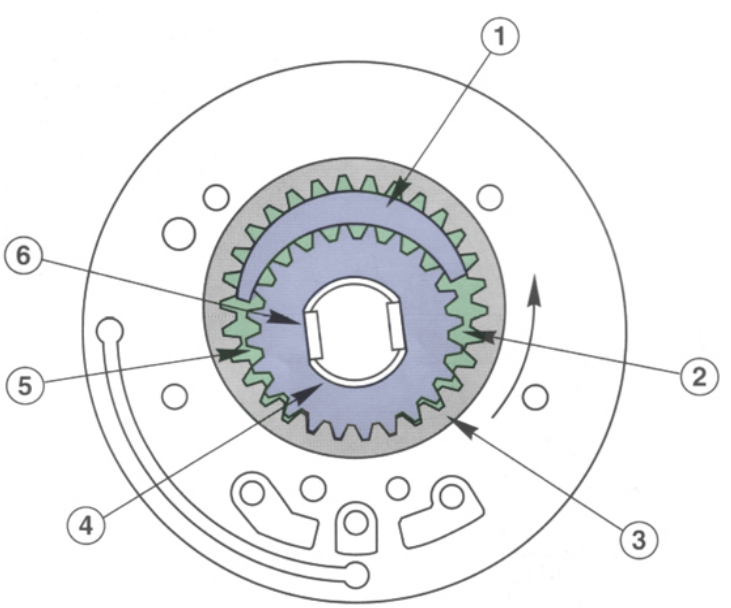

Oil pump and governor[1]

Oil Pressure Oil pressure to operate the clutches and brake bands is supplied by a pump. The supply for this is the oil in the sump of the gearbox. Three forward gears and one reverse gear are achieved from two sets of epicyclic gears. Unless the driver moves the gear selector to operate the valves, automatic gear changes are made depending on just two factors:

Throttle opening – a cable is connected from the throttle to the gearbox

Road speed – when the vehicle reaches a set speed a governor allows pump pressure to take over from the throttle.

Kick Down The cable from the throttle also allows a facility known as “kick down.” This allows the driver to gear down by pressing the throttle all the way down, such as when passing.

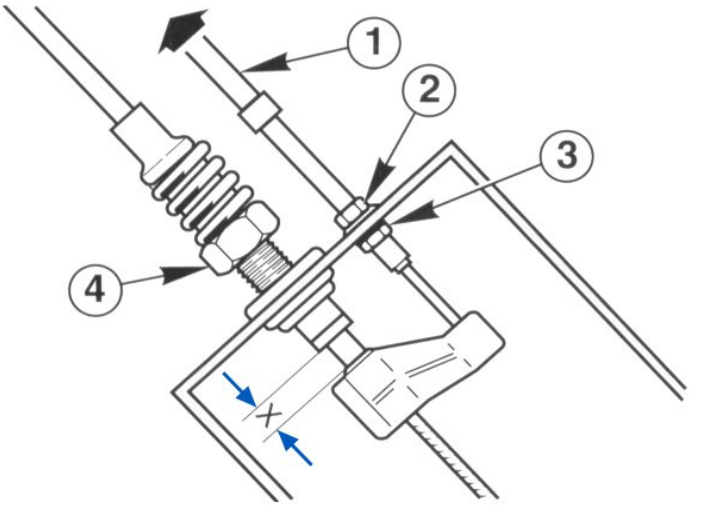

Cable position[1]

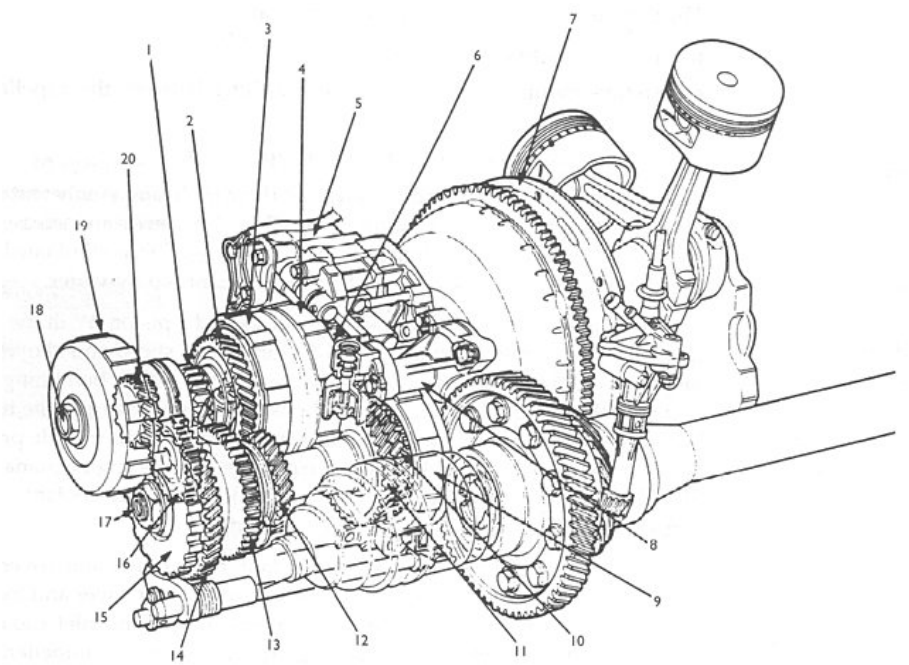

Rover automatic gearbox

Standard Gear Systems Many automatic transaxle gearboxes use gears the same as in manual boxes. The changing of ratios is similar to the manual operation except that hydraulic clutches and valves are used. An example of this system is shown here.

Summary Cars fitted with modern automatic transmission systems are a pleasure to drive. Traditionally, automatic-transmission cars used more fuel than those with manual transmission. However, the difference is now very small. The main reason is the ability to lock the converter and, therefore, eliminate slip.

Auto-transmission in action[2]

State the purpose **and** describe the operation of a brake band.

Read the previous section again and note down some key bullet points here:

-
-
-
-
-

Electronic and Hydraulic Control

Introduction The main purpose of electronically controlled automatic transmission (ECAT) is to improve on conventional automatic transmission in the following ways:

Make gear changes smoother and quieter
Improved performance
Reduce fuel consumption
Reduce characteristic changes over system life
Increase reliability.

Gear changes and lock-up of the torque converter are caused by hydraulic pressure – but under electronic control.

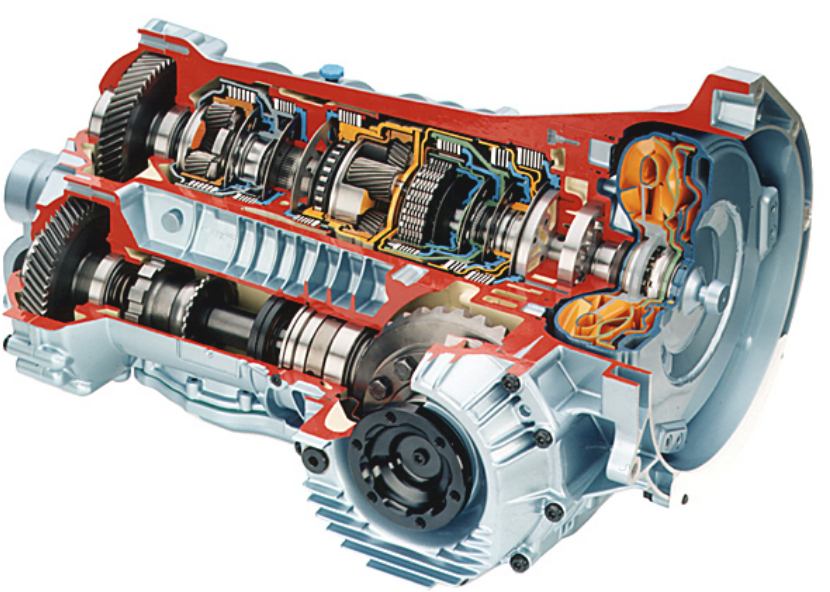

Porsche Carrera auto-gearbox [ZF]

Electronic Control of Automatic Transmission (ECAT) In an ECAT system, electrically controlled solenoid valves can influence the hydraulic pressure. Most ECAT systems now have a transmission ECU that is in communication with the engine-control system. Control of gearshift and torque-converter lockup is determined by the ECU. With an ECAT system, the actual point of gearshift is determined from pre-programmed memory within the ECU. Data from other sensors is also taken into consideration. Actual gearshifts are initiated by changes in hydraulic pressure, which is controlled by solenoid valves.

Control Functions The two main control functions of this system are hydraulic pressure and engine torque. A temporary reduction in engine torque during gear shifting allows smooth operation. This is because the peaks of gearbox output torque, which causes the characteristic surge during gear changes on conventional automatics, is suppressed. Because of these control functions, smooth gearshifts are possible and, due to the learning ability of some ECUs, the characteristics remain throughout the life of the system.

Torque Converter Lock-Up The ability to lock-up the torque converter has been used for some time even on vehicles with more conventional automatic transmissions. This gives better fuel economy, quietness and improved drivability. Lock-up is carried out using a hydraulic valve, which can be operated gradually to produce a smooth transition. The timing of lock-up is determined from ECU memory in terms of the vehicle speed and acceleration.

Hydraulic Systems Oil pressure is generated by the oil pump. It is then regulated and controlled by the main regulator valves. The same automatic transmission fluid (ATF) is used throughout the gearbox. The control valves are operated by hydraulic pressure, which can be a function of road speed, or by electrical solenoids controlled by the ECU.

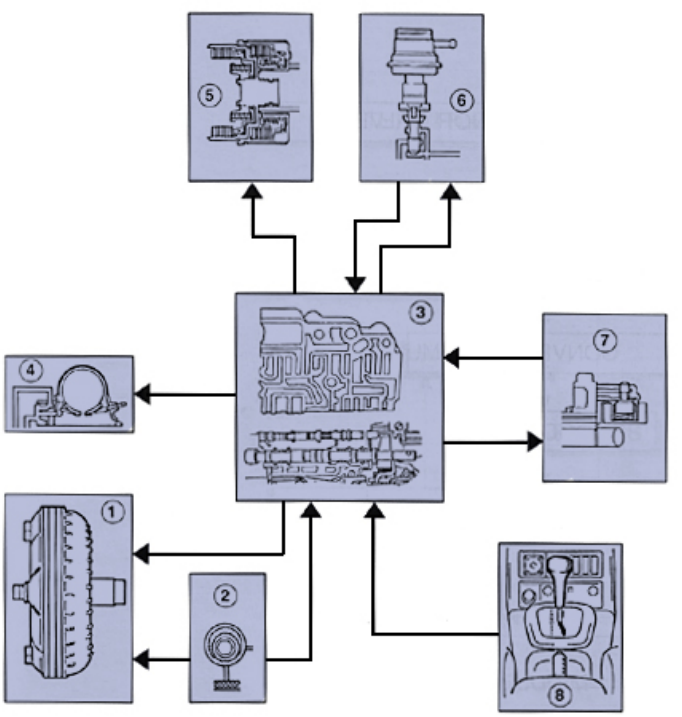

Hydraulic components and connections[1]

Electronic Control Valve Block A modern electronically controlled valve block is shown here. The ECU is built into the system. A connection to other ECUs is made via a CAN (controller area network) connection.

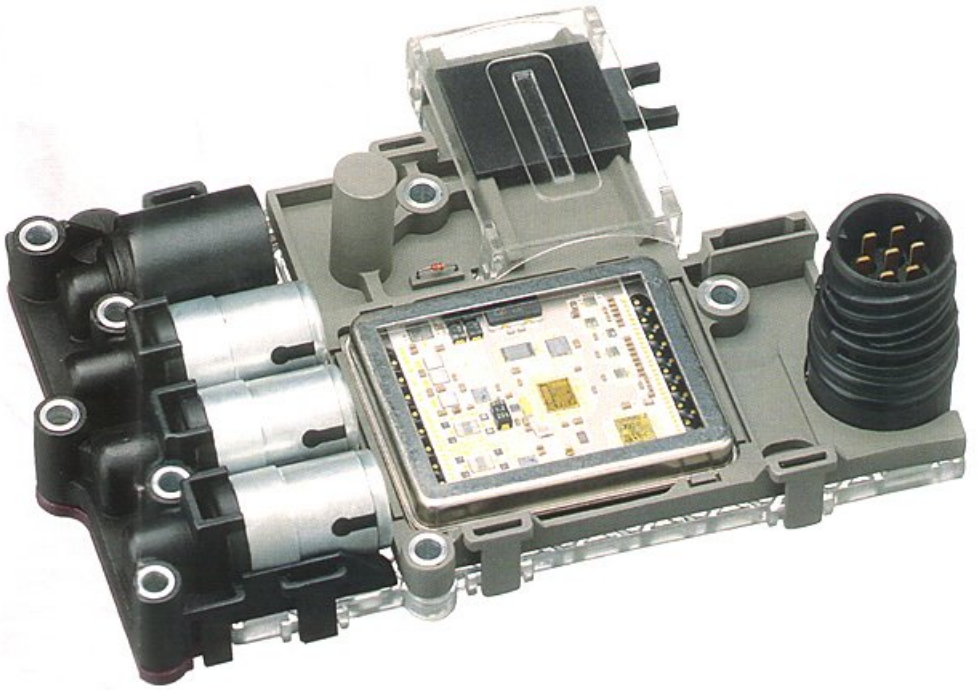

Bosch valve block[4]

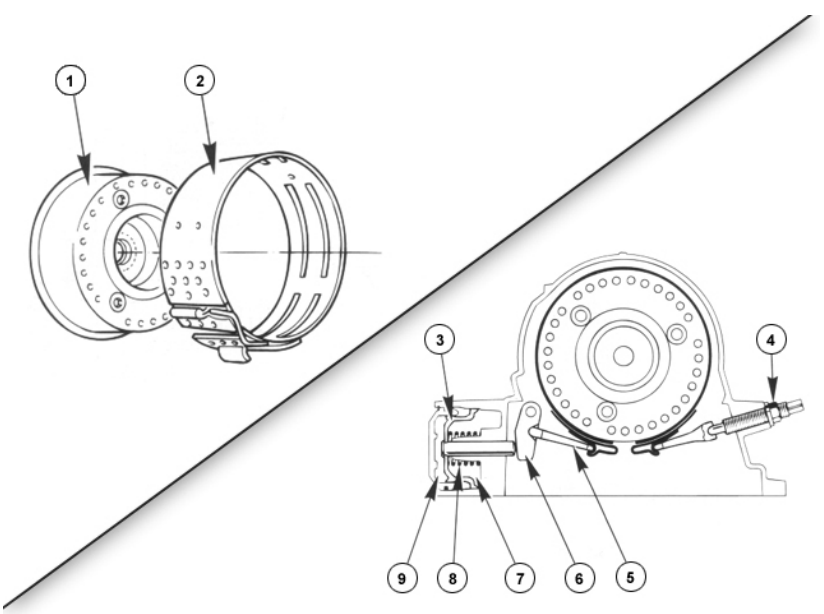

Brake band actuator[1]

Brake Band Movement Oil pressure is used to actuate clutches and break bands. An actuator that tightens a brake band onto a rotating “drum” Is shown here. The drum, which in some cases is the outer side of the gear-set annulus, is stopped by the action of the brake band. This changes the ratio of the epicyclic gears.

Hydraulic Functions Hydraulic components in automatic transmission systems can be split into three groups. These are:

Components that receive ATF independent of vehicle operation and selector position

Components with control and monitoring functions during gearshifts and while driving

Actuators to make the gearshifts while driving.

The hydraulic circuits can appear quite complex, however, they can be read like a circuit diagram. A full circuit is not shown here because they differ so much between manufacturers. Specific information is essential for any repair work.

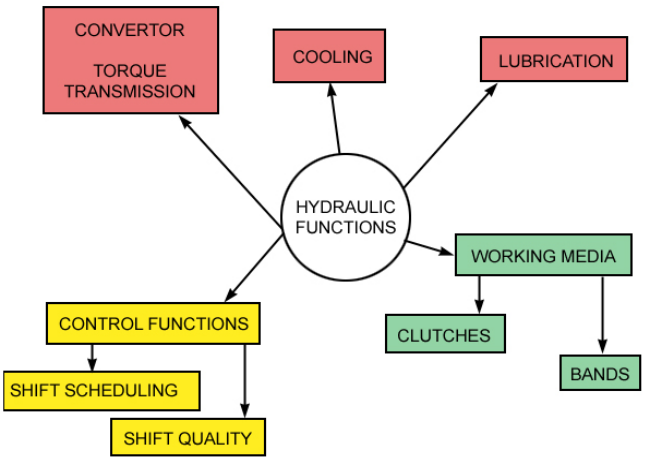

Component assignment[1]

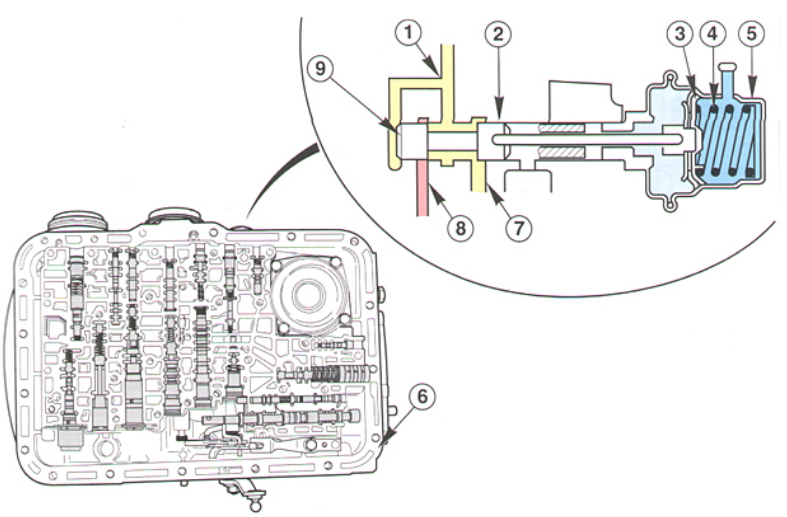

Throttle pressure valve[1]

Throttle Pressure In addition to atmospheric pressure, the operation of an automatic box is determined by three other pressures:

Main line pressure

Governor pressure

Throttle pressure.

The throttle pressure in the gearbox is determined by manifold pressure (vacuum, if you prefer). Manifold pressure acts on a diaphragm, which in turn moves the throttle pressure valve and controls throttle hydraulic pressure inside the transmission.

Governor Most governors on earlier boxes were centrifugal types as shown here. As is common when showing automatic transmission, only half of the component is shown. The complete assembly can be imagined as a reflection about the horizontal centerline. When shaft 7 rotates, centrifugal force acts on weight 6. This acts on the spring and in the control range and determines the governor pressure due to the action of valve 3.

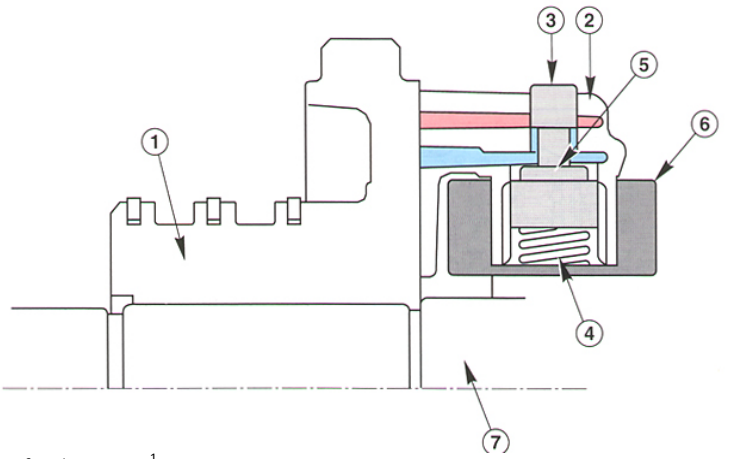

Centrifugal governor[1]

Summary There is a wide range of electronic- and hydraulic-control systems. All types, however, serve to operate brake bands and/or clutches. Electronically controlled system operation is determined by ECU programming. Other systems work by sensing a combination of road speed (governor pressure) and throttle (throttle pressure). The transmission (mainline pressure) is then used to operate clutches and bands, which are under the control of valves.

State how, in an ECAT system, gearshifts are made.

Read the previous section again and note down some key bullet points here:

-
-
-
-
-

Transaxle Automatic Transmission

Introduction The description that follows is based on the Ford AG4 (Automatic Gearbox, 4-speed) a fully automatic, electronically controlled transmission with four forward gears. Diagnostics are carried out, using dedicated test equipment, through the databank link connector (DLC) is in the passenger compartment.

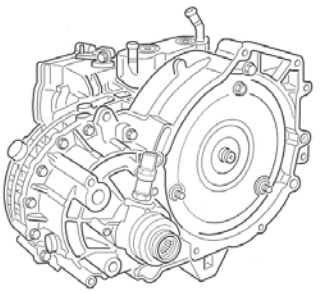

AG4 gearbox[1]

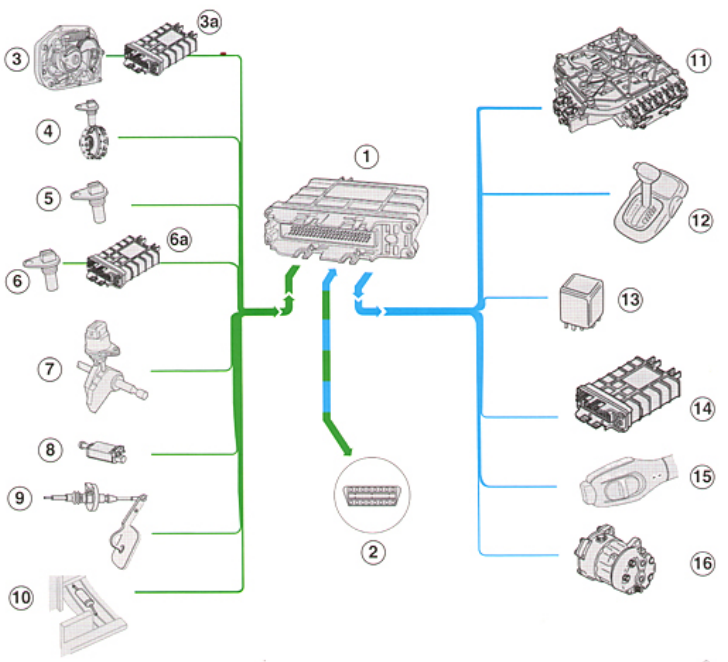

Con

trol components[1]

Transmission Control System Shift operations are controlled by the transmission module using fuzzy logic. The shift timing is variable within consumption and power-shift characteristic depending on:

Individual driving style

Current driving situation

Current road resistance.

Main Assemblies The AG4 consists of the following main assemblies:

Torque converter with converter lock-up clutch

Fluid pump with stator support

Ravigneaux planetary gear train with clutches and brakes

Intermediate gear stage

Final-drive assembly.

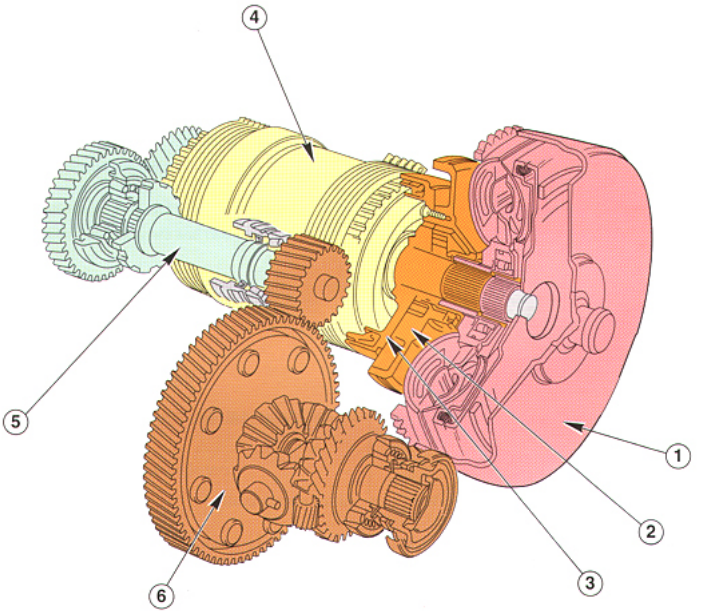

Main parts of the transmission[1]

Torque Converter The torque converter housing is bolted to the crankshaft and driven directly by it. The housing is welded to the impeller. The converter is filled with automatic transmission fluid. The blades are arranged radially and turn at the same speed as the engine. This transmits fluid to the turbine blades and, as a result, produces a radial force at the turbine. The turbine, which has blades arranged in a curved pattern, is splined to the transmission input shaft. The curved pattern allows fluid to flow inward due to the reduced centrifugal force compared with the impeller. It then passes to the stator.

Stator with Roller One-Way Clutch The stator is located between the impeller and the turbine. It is splined on the stator support, which is locked to the fluid pump housing and hence to the transmission housing. The stator has blades arranged in a curved pattern. It runs freely in the normal direction of rotation of the engine, but locks in the other direction. Its purpose is to boost torque (through ram pressure) up to the coupling point.

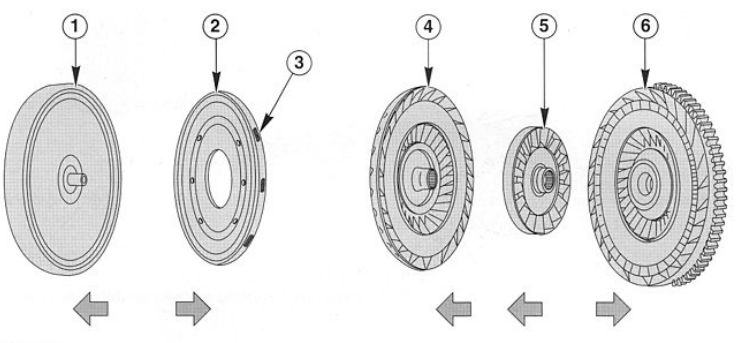

Stator and clutch[1]

Converter Lock-Up Clutch The torque-converter lock-up clutch allows slip-free and hence loss-free transmission of the engine torque to the automatic transmission. When engaged, it creates a frictional connection between the converter housing and the turbine. It consists of a clutch pressure plate with a friction lining and torsional vibration damper to reduce crankshaft torsional vibrations. The clutch is connected positively to the turbine. It is exposed to fluid pressure from one side for clutch disengagement and engagement. As a result, it is pressed against the converter housing or moved clear of it. A modulating valve allows controlled pressure build-up and reduction to ensure smooth opening and closing. The clutch is controlled electronically.

Fluid Pump and Stator Support The fluid pump is a crescent gear pump. It is driven directly from the crankshaft through two engaging pins on the converter housing. It supplies the hydraulic system with working pressure. The stator support is bolted to the fluid pump, which is splined to the stator. The fluid pump housing is bolted to the transmission housing.

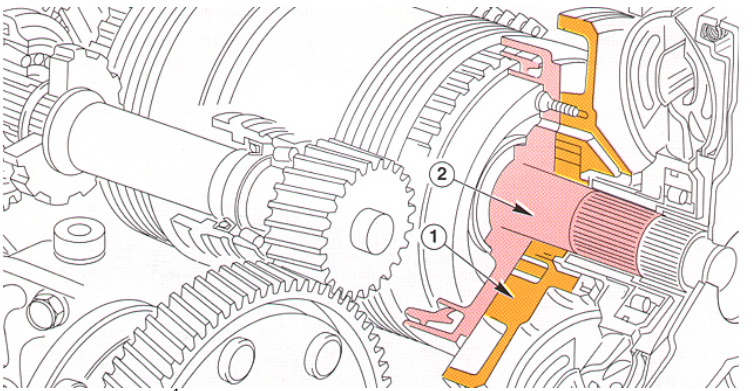

Fluid pressure pump[1]

Planetary Gear Set The planetary gear train is a Ravigneaux planetary gear set. The long planet gears of the planetary gear set are stepped to achieve the optimum spacing between third and fourth gears. The different transmission ratios are selected by activating and releasing the individual clutches and brakes. The drive can pass through the small sun wheel, the large sun wheel or the planet carrier. Drive always passes through the annulus.

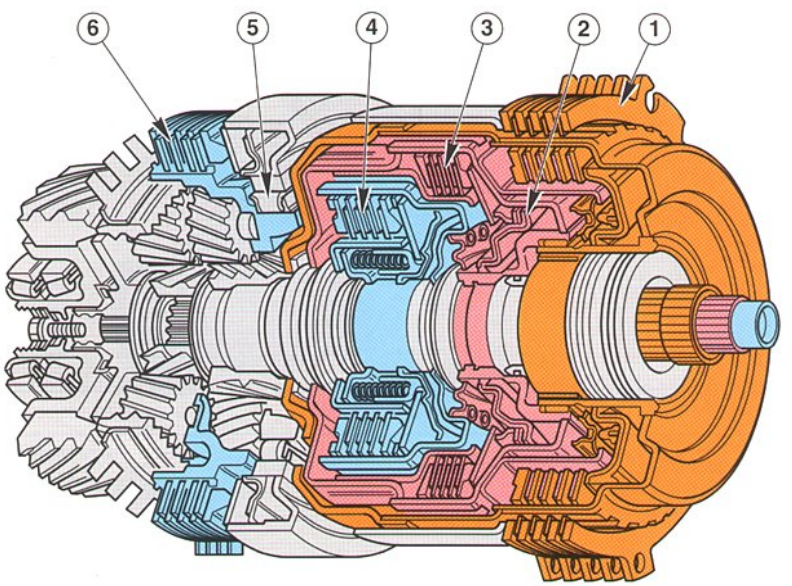

Multi-plate clutches[1]

Clutch Unit The clutch unit consists of three multi-plate clutches, two multi-plate brakes and a roller one-way clutch. The appropriate clutches or brakes are supplied with pressure by the transmission module according to the selected drive range and shift program. The required components are driven, locked or allowed to rotate freely to select the different transmission ratios. The clutch unit acts on the components of the planetary gear train.

Power Flow In first gear, drive passes through the first- on to the third-gear clutch to the small sun wheel. The planet carrier's first gear one-way clutch is locked. The short planet gears drive the long planet gears, which then drive the annulus. The large sun wheel is allowed to rotate freely. Drive passes via the reverse gear clutch to the large sun wheel. In reverse gear, the planet carrier is locked by means of the reverse gear brake. The large sun wheel drives the long planet gears; these in turn, drive the annulus. This gives one ratio in the opposite direction to the normal direction of rotation of the engine. The long planet gears also mesh in the short planet gears, which rotate freely with the small sun wheel.

Control Unit (Valve Body Assembly) The control unit (valve body assembly) accommodates the solenoid valves for hydraulic control of the drive ranges. They are activated by the transmission module. A conductor foil connects the solenoid valves to each other via a multiplug-to-transmission-module loom.

Control unit with valves[1]

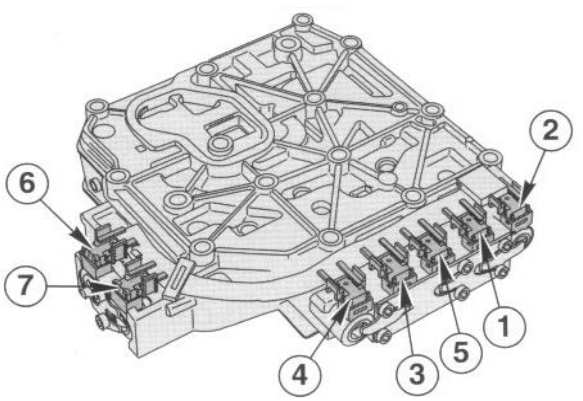

Connector foil removed[1]

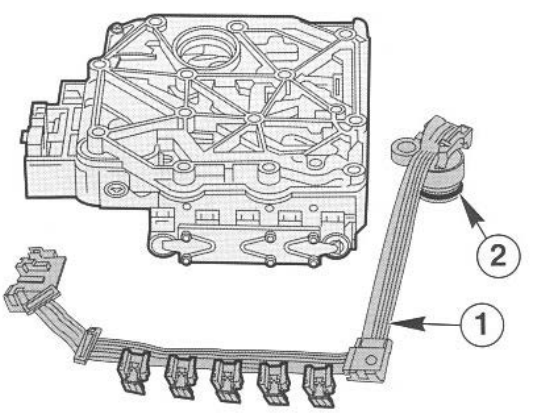

Parking Pawl The parking gear is located on the intermediate shaft. The engaging plunger is activated by moving the lever, which is connected securely to the shift shaft. When the manual selector lever is moved to position "P," the engaging plunger moves the parking pawl against the force of a spring and presses it into the teeth of the parking gear. This immobilizes the transmission. When the manual selector lever is moved out of position "P," the engaging plunger releases the parking pawl.

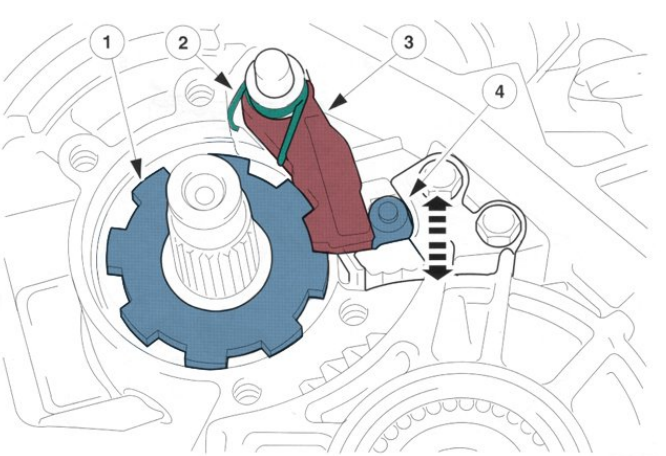

Locking mechanism for parking[1]

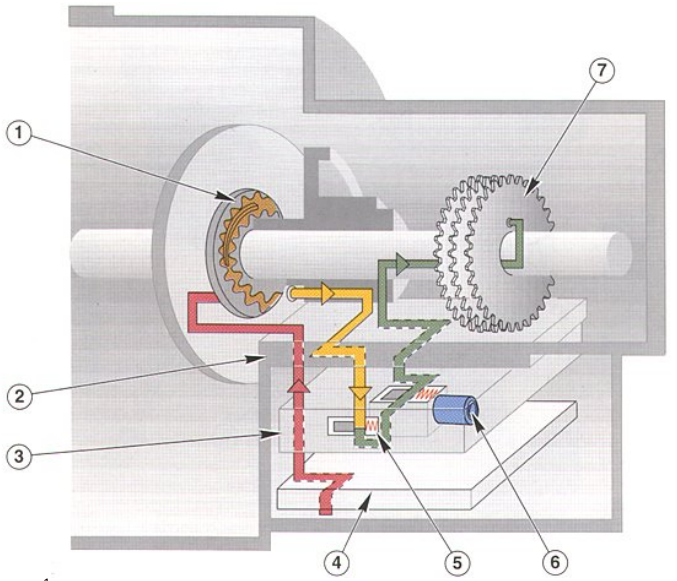

Fluid circuit[1]

Fluid Circuit and Control On the low-pressure side of the pump, the fluid passes from the sump via the fluid filter to the pump. On the high-pressure side, the fluid is sent to the control unit (valve body assembly) at working pressure and passed from there by the solenoid valves to the corresponding clutches and brakes. The transmission module switches the clutches and brakes by means of the solenoid valves in the control unit, according to the selected drive range. The power then flows via the clutches to the planetary gear set while the brakes and the one-way clutch lock the corresponding components.

Summary This type of transaxle gearbox has been in use now for a number of years. It is typical of many vehicles and it highlights some of the techniques used by different systems.

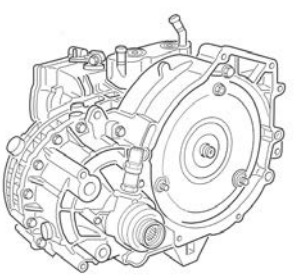
Transaxle transmission[1]

Describe how a parking pawl is operated.

Read the previous section again and note down some key bullet points here:

-
-
-
-

Constantly Variable Transmission

Introduction The Ford CTX (Constantly Variable Transaxle) transmission. This type of automatic transmission, also called continuously variable transmission, uses a pair of cone-shaped pulleys connected by a metal belt.

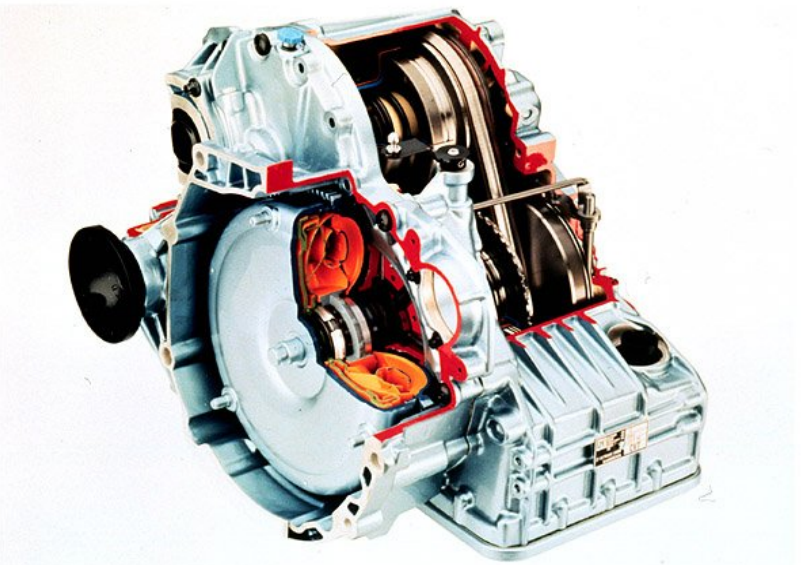

Ford CTX[2]

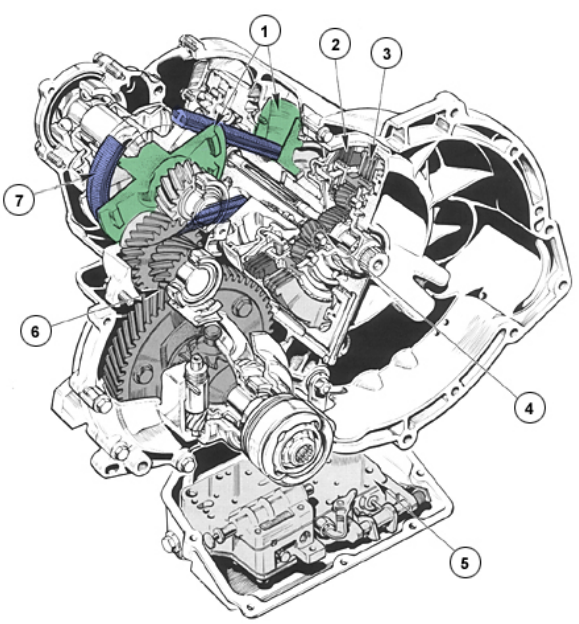

The belt transmits drive by thrust[1]

Drive Belt The key to this system is the high friction drive belt. The belt, made from high-performance steel, transmits drive by thrust rather than tension. The ratio of the rotations, or the gear ratio, is determined by how far the belt rides from the centers of the pulleys. The transmission can produce an unlimited number of ratios. As the car changes speed, the ratio is continuously adjusted.

Efficiency Cars with this system are said to use fuel more efficiently than cars with set gear ratios. Within the gearbox, hydraulic control is used to move the pulleys and change the drive ratio. An epicyclic gear set is used to provide a reverse gear as well as a fixed ratio.

CTX control lever[2]

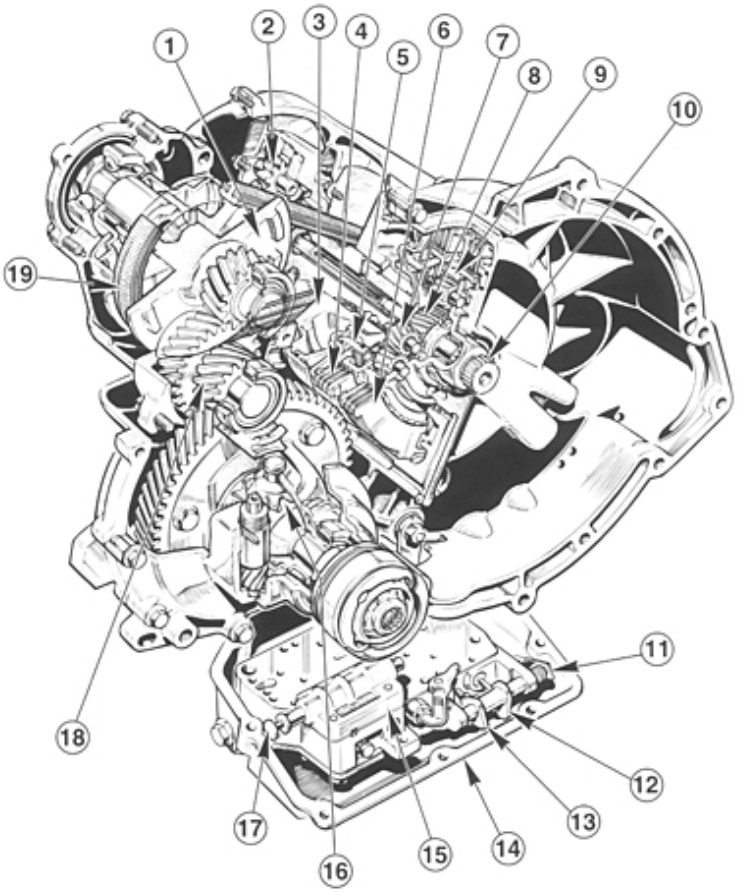

CTX components[1]

Transmission Components The main components of the CTX automatic transmission are shown here. Although the gear ratios are achieved through different means, the overall operation of the transmission is similar to other automatic types.

Reverse and Forward Clutch To achieve forward and reverse, a standard epicyclic gear set is used. The drive is taken from this by operating one of two clutches. These are multiplate clutches and are operated hydraulically.

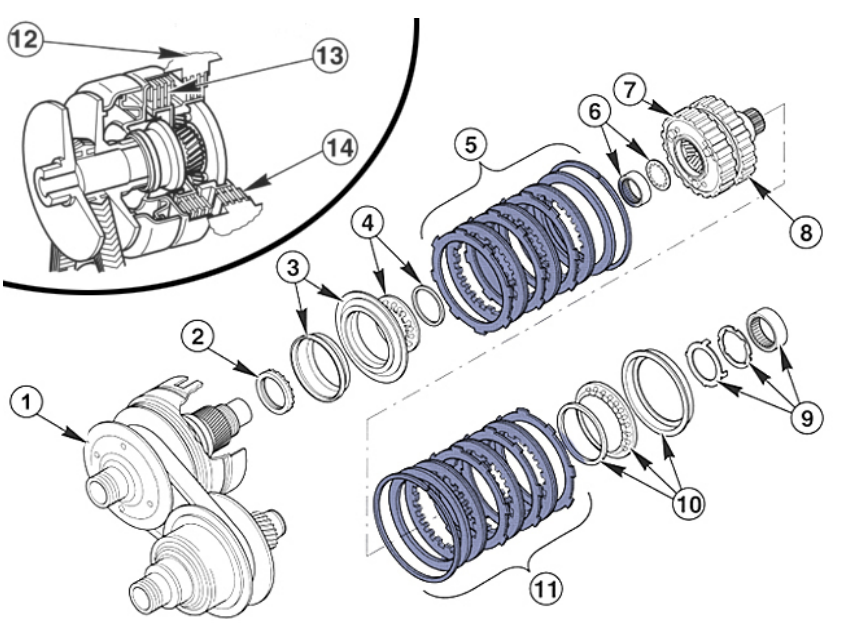

Clutches[1]

Cone Pulleys and Drive Belt The drive belt transmits torque from the primary cone pulley to the secondary cone pulley unit. The belt is V-shaped; it consists of 450 steel elements held together by 10 steel strips. The tension of the belt is determined by the current ratio and the torque to be transmitted.

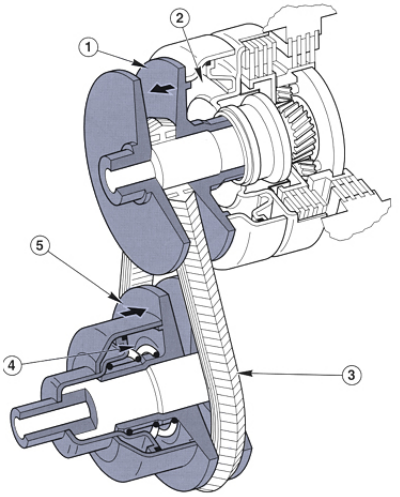

Cone pulley unit[1]

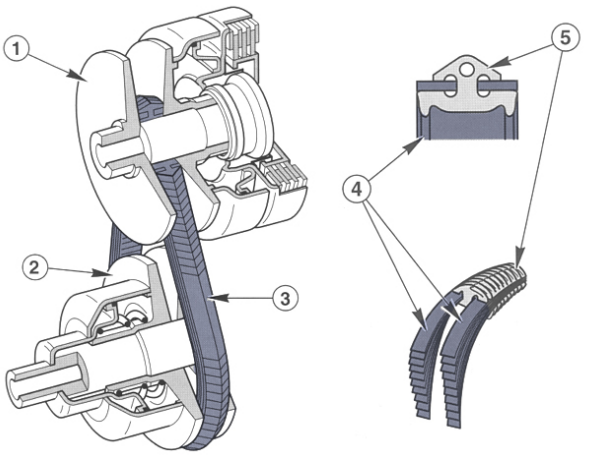

Drive belt[1]

Control Cables Two control cables are used on this system. One from the selector lever and the other from the throttle. The position of the accelerator cable is transmitted to the shift cable through the throttle cable and cam plate. Correct adjustment is vital to ensure drive ratios are correctly produced.

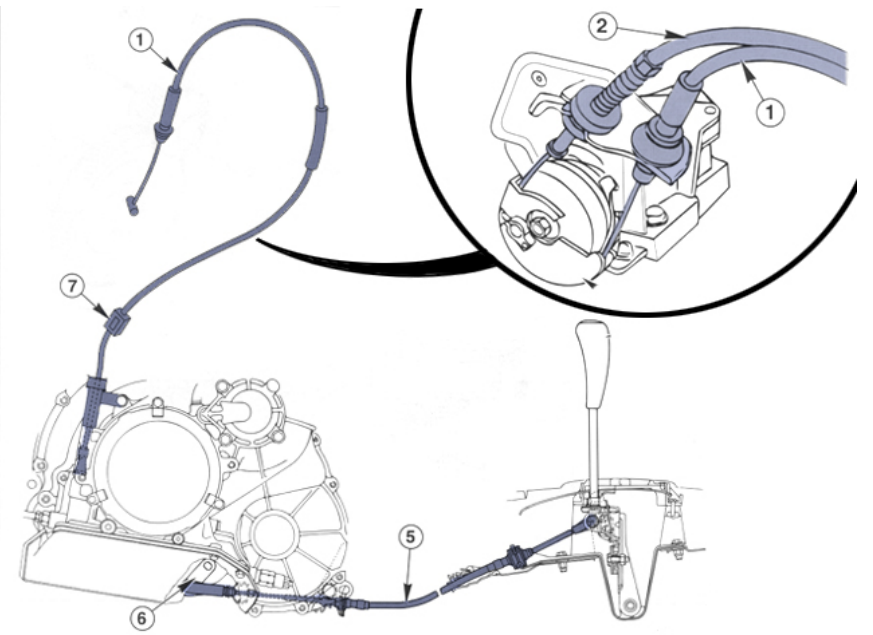

Throttle and selector controls[1]

Power Flow A representation of the power flow when reverse, neutral or drive is selected Is shown here. The clutches are the parts that change power flow. From the output shaft, drive is transmitted to the final drive reduction gear, differential and front axle driveshafts.

Belt Movement The range of ratios varies from about 2.5:1 to about 15:1. The ratio is set by moving the two halves of the pulleys. The pulleys are moved by hydraulic pressure in the primary and secondary cylinders. The changes in the two cylinders take place at the same time so that the required length of the drive belt remains constant.

Hydraulic Control The components of the hydraulic system are shown here. Clutches are controlled by hydraulic valves. Different pressures are used to move the pulleys. The term “pitot” refers to sensing by means of a special nozzle in a rotating chamber. The pressure produced is proportional to the speed of rotation. This speed is either engine speed or road speed.

Summary The CTX transmission is an innovative design. It feels unusual to drive at first but the user soon becomes accustomed to it.

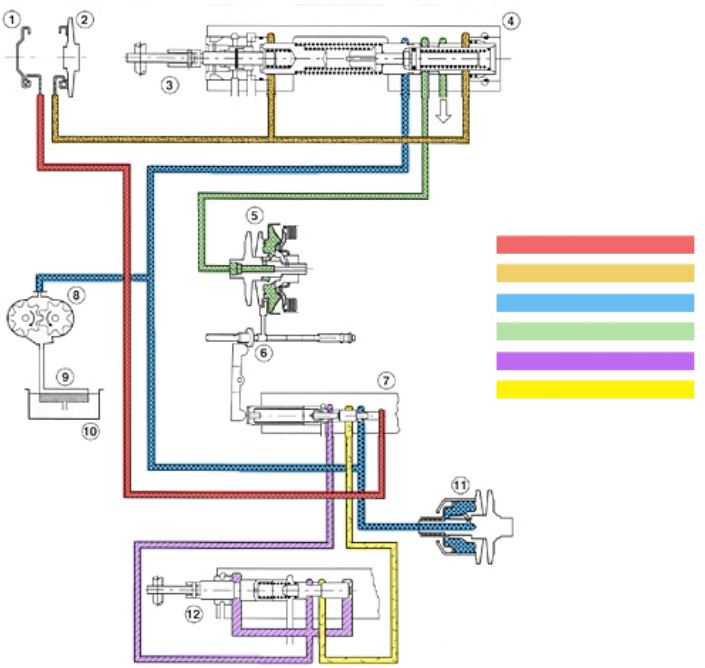

Hydraulic system components[1]

State how the drive belt transmits torque from the primary cone pulley to the secondary cone pulley unit.

Read the previous section again and note down some key bullet points here:

-
-
-
-
-

Four-Wheel Drive Systems

Introduction Four-wheel drive (4-WD) systems can be described as part-time or full-time. Part-time means that the driver has the choice of selecting the drive. All 4-wheel drive systems must include some type of transfer gearbox.

Four-wheel drive may be essential for this car![2]

Four-Wheel Drive System Layout The main components of a four-wheel drive system are show here. Each axle must be fitted with a differential. A transfer box takes drive from the output of the normal gearbox and distributes it to the front and rear. The transfer box may also include gears to allow the selection of a low ratio. High ratio is a straight-through drive.

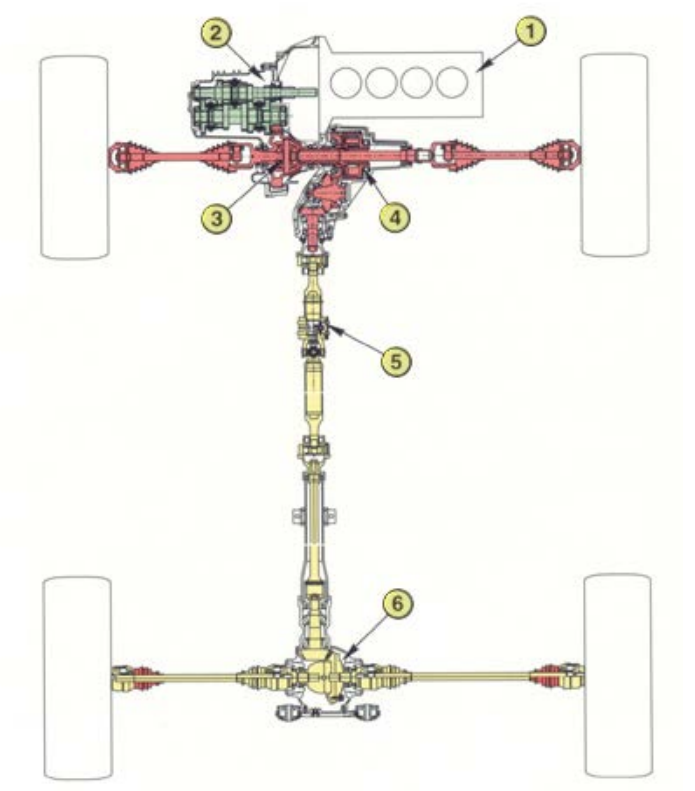

The main components of a four-wheel drive system[1]

Part-Time 4-Wheel Drive A 4-wheel drive system, when described as part-time, means that the driver selects 4-wheel drive only when the vehicle needs more traction. When the need no longer exists, the driver reverts to the normal 2-wheel drive. This keeps driveline friction, and therefore the wear rate, to a minimum.

S election control

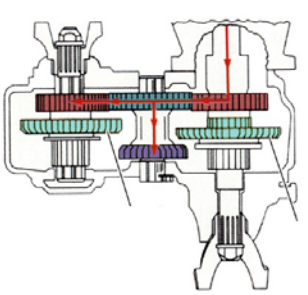

Transfer box - Neutral[1]

Full-Time 4-Wheel Drive A 4-WD system, when described as full-time, means that the drive is engaged all the time. The driver may still be able to select a low-range setting. To prevent 'wind up', which would occur when the front and rear axles rotate at different speeds, a center differential or viscous drive is used.

Four-wheel drive in action (part-time)

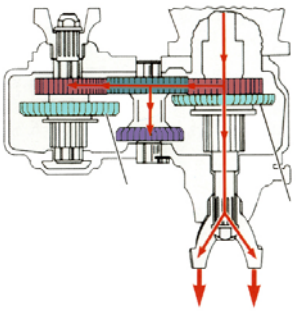

Transfer box - Two wheel drive high[1]

All-Wheel Drive (A-WD) An all-wheel drive system automatically transfers drive to the axle with better traction. It is designed for normal road use. A low-ratio option is not available. The system is described as part-time if the driver can select front-, or all-wheel drive. It is described as full-time if selection is not possible. The drive, on full-time systems, is passed to the rear via a viscous coupling. When the front wheels spin, the viscous coupling locks and transfers drive to the rear.

Volvo S60 AWD vehicle[2]

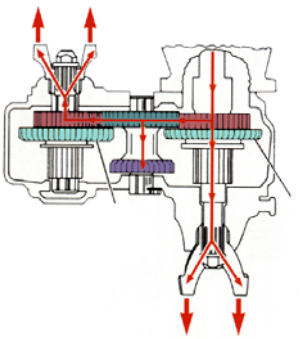

Transfer box - Four wheel drive high[1]

Transfer Box The transfer box of a part-time 4-WD system usually allows the driver to choose from four options: Neutral, 2-WD High, 4-WD High and 4-WD Low. A typical system will have the transfer box, attached to the normal rear-wheel drive gearbox, in place of the extension housing. A two-speed transfer box is shown here.

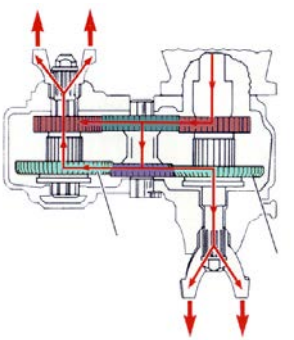

Transfer box - Four wheel drive low[1]

Center Differential A differential allows its two outputs to be driven at different speeds. This is normally important for the drive axle of a vehicle. When a vehicle is turning, the outer wheels travel faster than the inner wheels. On 4-WD systems, it is possible for, say, the front axle to rotate faster than the rear axle. This could produce driveline 'wind up' of the transmission. Center differentials are designed to allow for this. On modern vehicles, they often consist of planetary-type gears.

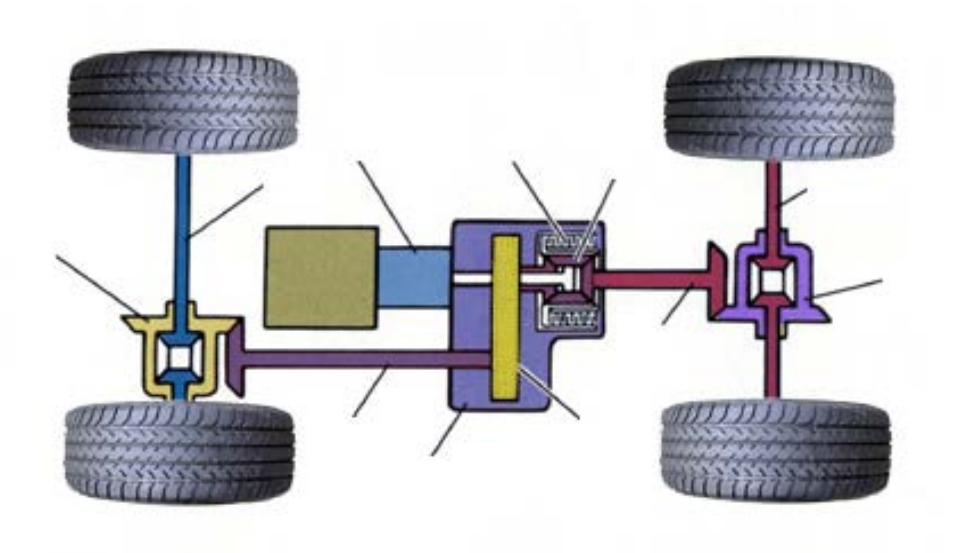

Differential fitted between front and rear axles

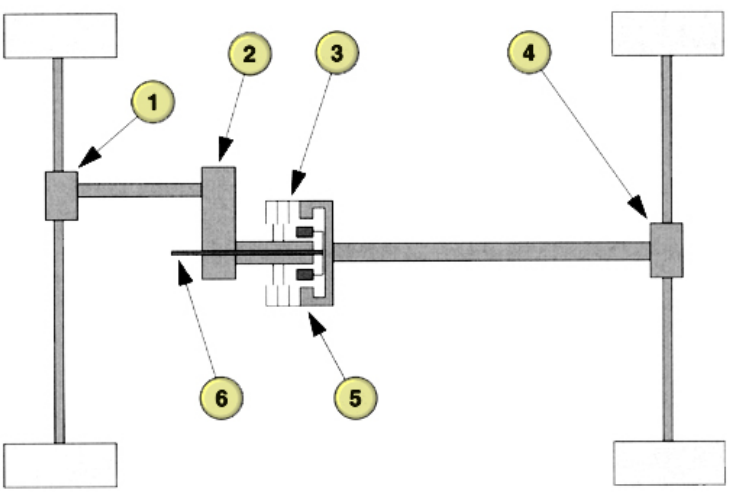

Torque is transmitted when axle speeds differ[1]

Viscous Coupling A viscous coupling is designed to transmit drive when the axle speeds differ. This occurs because the difference in speed of the two axles increases the friction in the coupling. This results in greater torque transmission, which in turn reduces the speed difference. As the speed difference reduces, less torque is transmitted. In this way, the torque is shared proportionally between the two axles.

Chain Drive A 'silent' drive chain is used on many newer vehicles to pass the drive to the auxiliary output shaft. The chain takes up less space than gears. It is designed to last the life of the vehicle and adjustment is not normally possible. The steel chain is similar in design to timing gear chains, only it is wider and stronger.

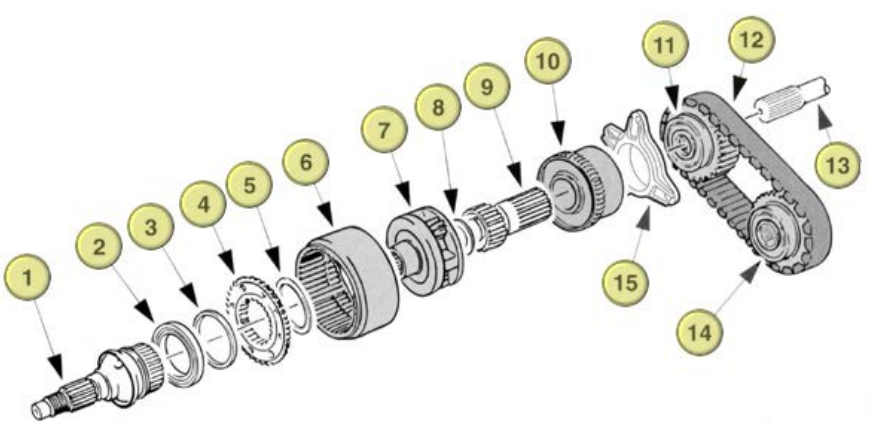

Transfer box using planetary gears and a drive chain[1]

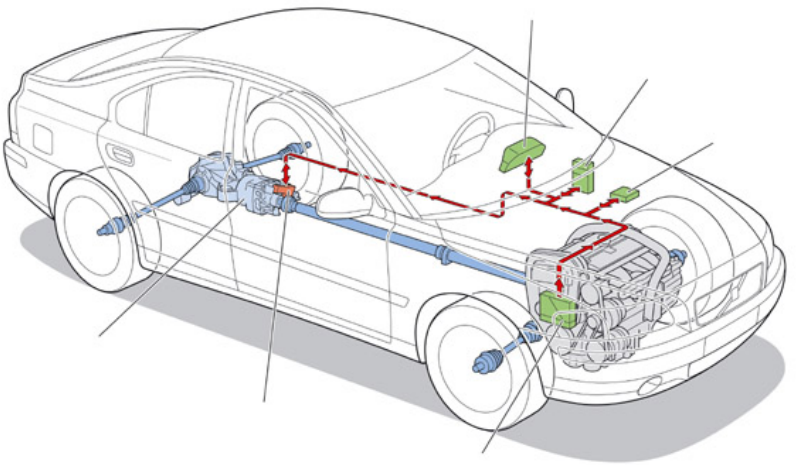

Volvo 4wd layout[2]

Summary Four-wheel drive systems use a combination of propshafts and driveshafts together with viscous couplings and transfer boxes. A number of variations are possible. These are described as full-time or part-time.

State the **four** usual settings/options of a transfer box selectable by the driver.

Read the previous section again and note down some key bullet points here:

-
-
-
-
-

Direct Shift Gearbox (DSG)

Introduction The direct shift gearbox is an interesting development as it could be described as a manual gearbox that can change gear automatically. In fact it can be operated by 'paddles' behind the steering wheel, a lever in the centre console of in a fully automatic mode. The gear train and synchronising components are very similar to a normal manual change gearbox however.

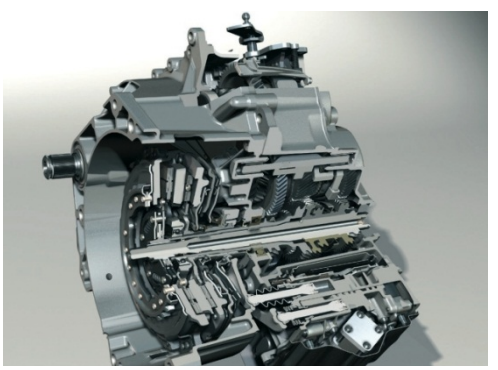

Basic principle The direct shift gearbox is made of two transmission units that are independent of each other. Each transmission unit is constructed in the same way as a manual gearbox. Each transmission unit is connected by a multi-plate clutch. Both multi-plate clutches are the wet type and work in oil. They are regulated, opened and closed by a mechatronics system.

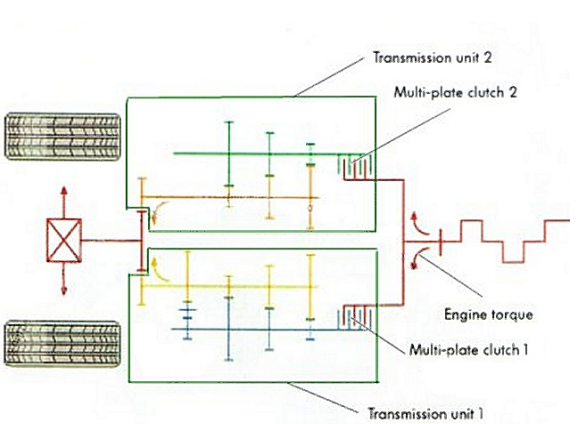

Gear selection 1st, 3rd, 5th and reverse gears are selected via multi-plate clutch 1. 2nd, 4th and 6th gears are selected via multi-plate clutch 2. One transmission unit is always in gear and the other transmission unit has the next gear selected ready for the next change, but with its clutch still in the open position.

Torque input Torque is transmitted from the crankshaft to a dual mass flywheel. The splines of the flywheel, on the input hub of the double clutch, transmit the torque to the drive plate of the multi-plate clutch. This is joined to the outer plate carrier of clutch 1 with the main hub of the multi-plate clutch. The outer plate carrier of clutch 2 is also positively joined to the main hub.

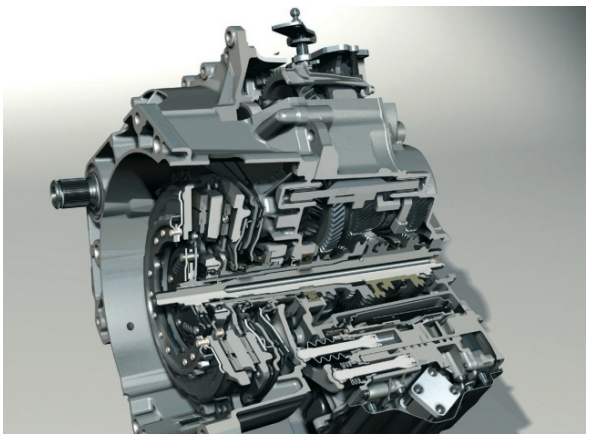

Multi-plate clutches Torque is transmitted into the relevant clutch through the outer plate carrier. When the clutch closes, the torque is transmitted further into the inner plate carrier and then into the relevant gearbox input shaft. One multi-plate clutch is always engaged.

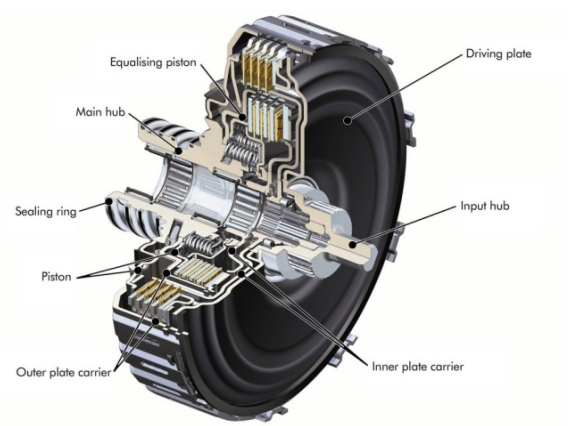

Multi-plate clutch 1 Clutch 1 is the outer clutch and transmits torque into input shaft 1 for the 1st, 3rd 5th and reverse gear. To close the clutch, oil is forced into the pressure chamber. Plunger 1 is therefore pushed along its axis and the plates of clutch 1 are pressed together. Torque is then transmitted via the plates of the inner plate carrier to input shaft 1. When the clutch opens, a diaphragm spring pushes plunger 1 back into its start position.

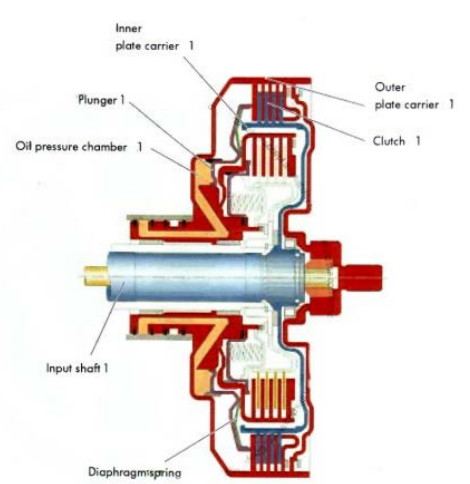

Multi-plate clutch 2 Clutch 2 is the inner clutch and transmits torque into input shaft 2 for 2nd, 4th and 6th gear. As with clutch 1, oil is forced into the pressure chamber so that plunger 2 then joins the drive via the plates to input shaft 2. The coil springs press plunger 2 back to its start position when the clutch is opened.

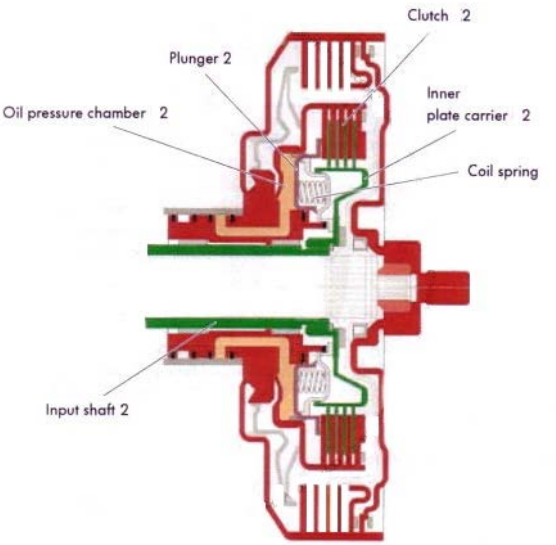

Input shaft 2 Input shaft 2 is shown in relation to the installation position of input shaft 1. It is hollow and is joined via splines to multi-plate clutch 2. The helical gear wheels for 6th, 4th and 2nd gear can be found on input shaft 2. For 6th, 4th and 2nd gear, a common gear wheel is used. A pulse wheel is used to measure the speed of input shaft 2. The sender is adjacent to the gear wheel for 2nd gear.

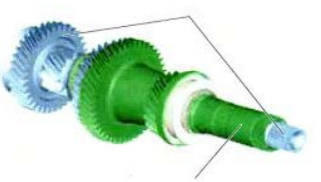

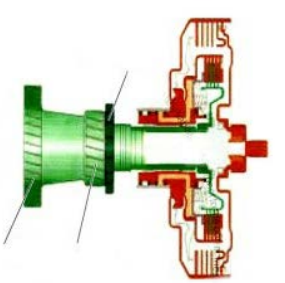

Input shaft 1 Input shaft 1 rotates inside shaft 2 and it is joined to multi-plate clutch 1 via splines. Located on input shaft 1 are the helical gear wheels for 5th gear, the common gear wheel for 1st and reverse gear and the gear wheel for 3rd gear. A second pulse wheel is used to measure the speed of input shaft 1. The sender is between the gear wheels for 1st/reverse gear and 3rd gear.

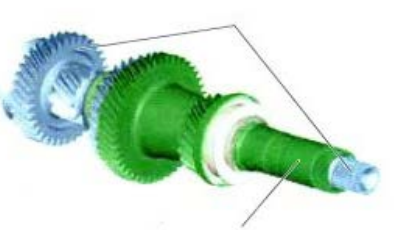

Output shafts In line with the two input shafts, the direct shift gearbox also has two output shafts. Because the gear wheels for 1st and reverse gear are the same, and 4th and 6th gear are on the input shafts, it was possible to reduce the length of the gearbox.

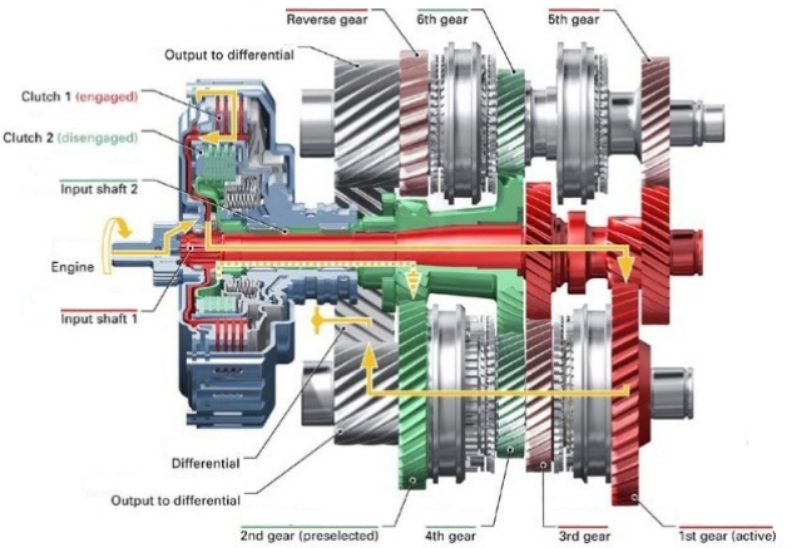

Output shaft 1 Located on output shaft 1 are:

- The three-fold synchronised selector gears for 1st, 2nd and 3rd gears.
- The single synchronised selector gear for the 4th and
- The output shaft gear for meshing into the differential.

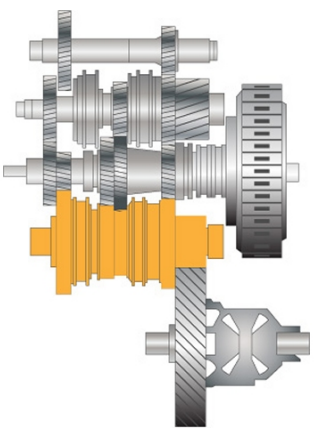

The output shaft meshes into the final drive gear wheel of the differential.

Output shaft 2 Located on output shaft 2 are:

- the pulse wheel for gearbox output speed
- the selector gears for 5th, 6th and reverse gears and
- the output shaft gear for meshing into the differential.

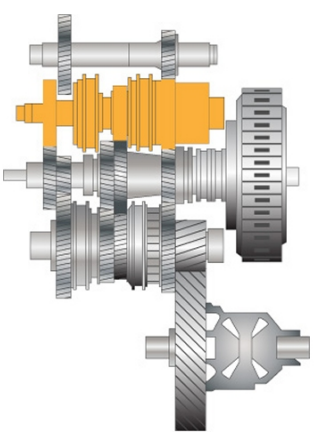

Both output shafts transmit the torque further into the differential via their output shaft gears.

Reverse shaft The reverse shaft changes the direction of rotation of output shaft 2 and therefore the direction of rotation of the final drive in the differential. It engages in the common gear wheel for 1st gear and reverse gear on input shaft 1 and the selector gear for reverse gear on output shaft 2.

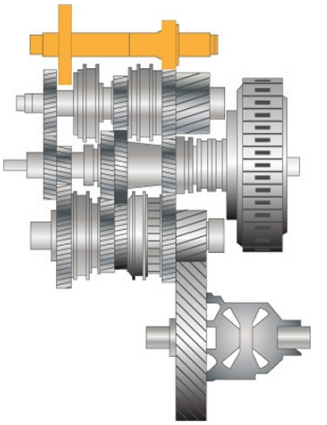

Differential Both output shafts transmit the torque to the input shaft of the differential. The differential transmits the torque via the drive shafts to the road wheels.

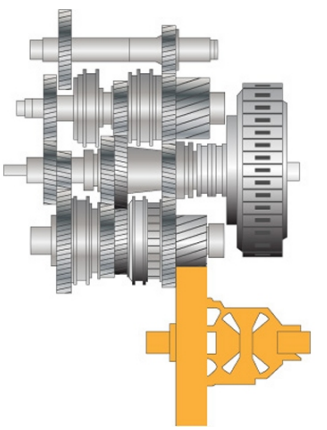

Parking lock A parking brake is integrated in the differential to secure the vehicle in the parked position and to prevent the vehicle from creeping forwards or backwards unintentionally, when the handbrake is not applied. Engagement of the locking pawl is by mechanical means via a cable between the selector lever and the parking brake lever on the gearbox.

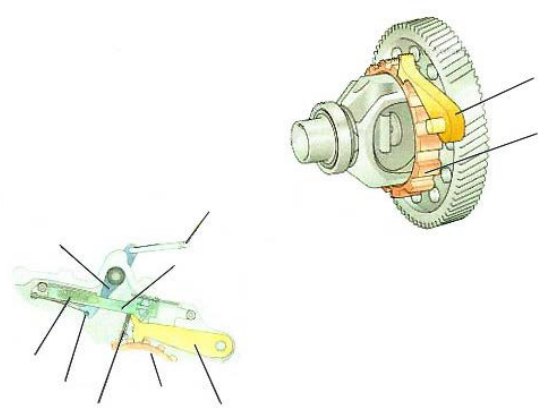

Synchronisation 1 To engage a gear, the locking collar must be pushed onto the selector teeth of the selector gear. The task of synchronisation is to balance the speed between the engaging gear wheels and the locking cellar. Molybdenum coated brass synchro-rings form the main part of synchronisation.

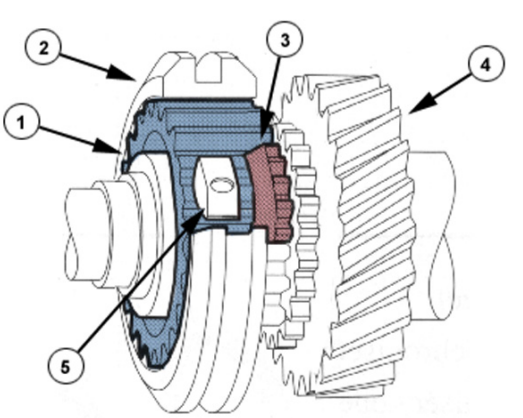

Synchronisation 2 1st, 2nd and 3rd gears are equipped with three-fold synchronisation. Compared with a simple cone system, a considerably larger friction area is provided. Synchronisation efficiency is increased as there is a greater surface area to transfer heat. This threefold synchronisation consists of:

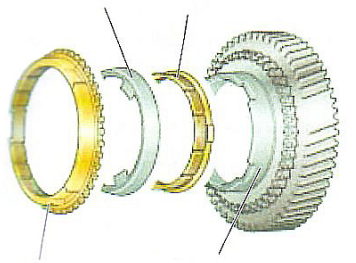

- an outer ring (synchro-ring)
- an intermediate ring
- an inner ring (2nd synchro-ring)
- a friction cone on the selector gear/gear wheel

Synchronisation 3 Balancing of the large speed differences between different selector gears is faster in the low gears, less effort is required to engage the gears. 4th, 5th and 6th gears are equipped with a simple cone system. The speed differences here are not as great as when gears are selected. The balancing of speed is therefore faster. Littler effort is required for synchronisation. Reverse gear is equipped with dual cone synchronisation which consists of:

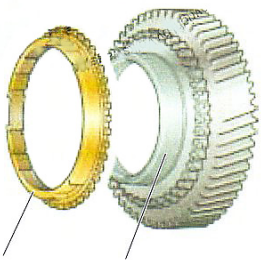

- a synchro-ring and
- a friction cone on the selector gear/gear wheel.

Torque transmission in the vehicle The engine torque is transmitted via the dual mass flywheel to the direct shift gearbox. On front wheel drive vehicles the drive shafts transmit the torque to the front road wheels. On four-wheel drive vehicles the torque is also transmitted to the rear axle via a bevel box. A propshaft transmits the torque to a haldex coupling. Integrated in this rear final drive is a differential for the rear axle.

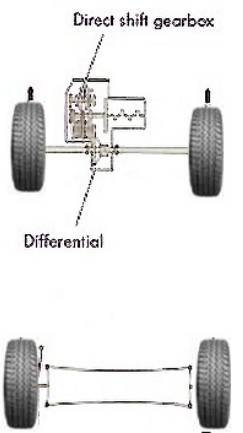

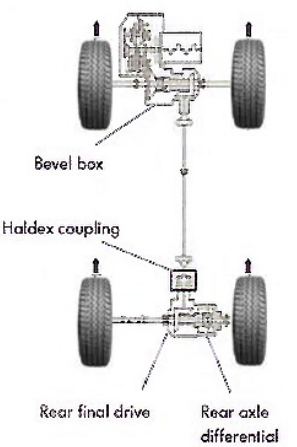

Transmission route through gears The torque in the gearbox is transmitted either via the outer clutch 1 or the inner clutch 2. Each clutch drives an input shaft. Input shaft 1 (inner) is driven by clutch 1 and input shaft 2 (outer) is driven by clutch 2. Power is transmitted further to the differential via:

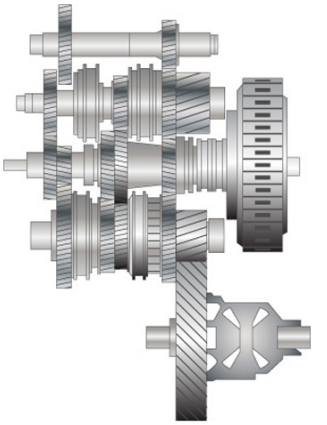

- output shaft for 1st, 2nd, 3rd and 4th gears and
- output shaft 2 for 5th, 6th and reverse gears.

Mechatronics 1 The mechatronics are housed in the gearbox, surrounded by oil. They comprise of an electronic control unit and an electro-hydraulic control unit. The mechatronics form the central control unit in the gearbox. Housed in this compact unit are twelve sensors. Only two sensors are located outside the mechatronics system.

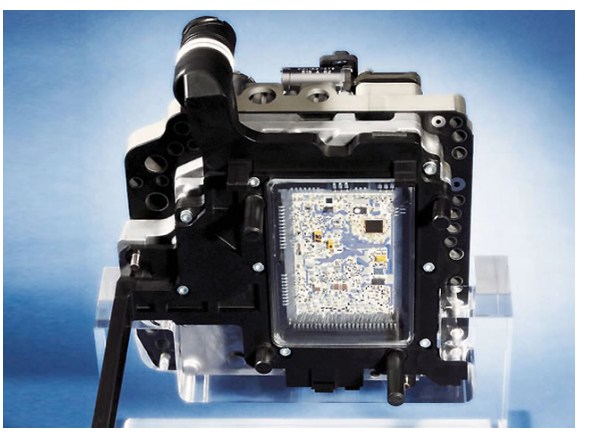

Mechatronics 2 The mechatronic control unit uses hydraulics to control or regulates eight gear actuators via six pressure valves. It also controls the pressure and flow of cooling oil from both clutches. The mechatronics control unit learns and remembers (adapts) the position of the clutches, the positions of the gear actuators, when a gear is engaged, and the main pressure.

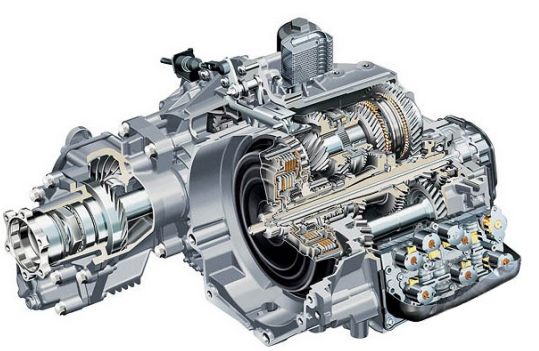

Summary The DSG is clearly an innovative development in automotive transmission. It will be interesting to see how it develops.

A version used by Audi is shown here.

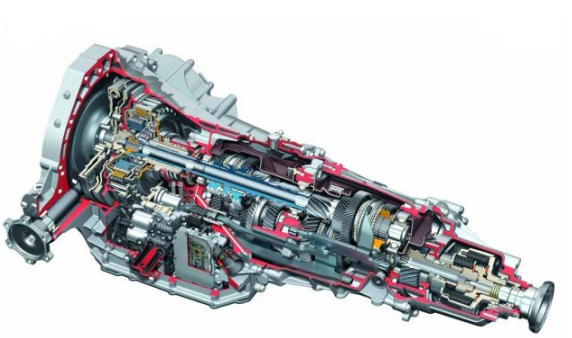

Work out which gears the following two images represent:

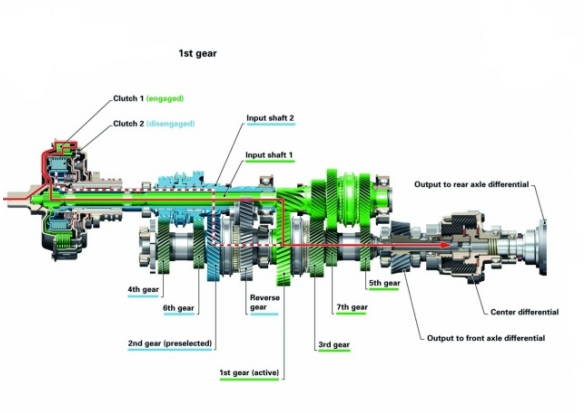

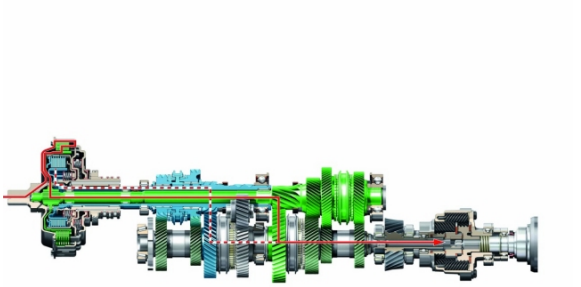

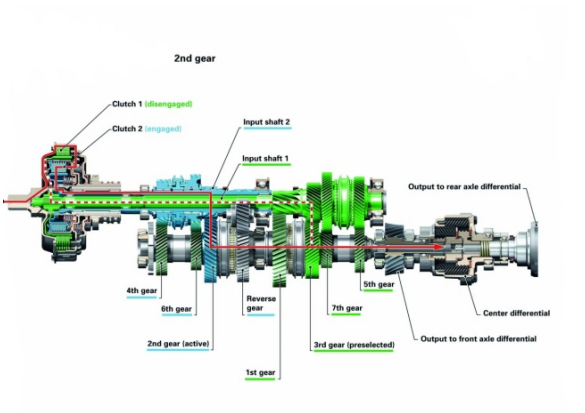

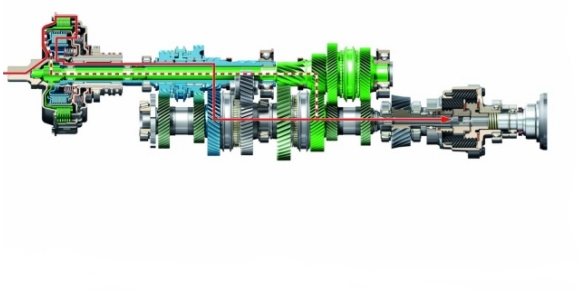

✐ Outline the operation of a direct shift gearbox.

🕮 Look back over the previous section and write out a list of the key bullet points here:

Service and Repair

Routine Maintenance

Scheduled Servicing Scheduled service requirements are often quite simple but none-the-less important. Systems should be checked for correct operation. Adjustments, repairs or replacements are then made if required.

All systems need some maintenance[2]

Non-Routine Work When carrying out routine maintenance, some non-routine work may be found. This should be reported to the driver or owner of the vehicle before repairs are carried out.

170. **Worksheet** Service automatic transmission system.

Fit appropriate car protection kit. Warm up the transmission by road test if possible. Raise the vehicle on a suitable hoist. Loosen and remove the drain plug if fitted and drain the oil into a suitable catch pan. If a drain plug is not fitted, undo the sump/pan bolts and drain carefully. Use caution with hot oil; make sure you wear suitable protection such as rubber gloves and overalls. Drain the torque converter if a plug is fitted. Remove the sump/pan completely.

Sump pan and magnets to collect swarf

Transmission Fluid Filter Remove the transmission fluid filter/screen. This should be cleaned and refitted or be replaced. Inspect the sump/pan for any unusual residues. This is useful to help diagnose faults. Clean the sump/pan thoroughly inside and out. Make sure all traces of the old gasket are removed. Fit new gaskets and any sealing rings as required, and refit the sump/pan. Tighten all the bolts evenly to the specified torque setting. Refit drain plug if removed.

Transmission filter

Checking the Fluid Level Check the manufacturer's data for the correct oil and refill with the appropriate quantity. NOTE: Only use the recommended oil. Other types may cause serious damage. Apply parking/handbrake, start the engine and move the lever through all positions. Recheck the fluid level. Note that some manufacturers' recommend the level to be checked with the engine running. Conduct a road test to check for correct operation. Return to the workshop and double check for leaks. Remove protection kit and report your findings.

Fluid level check

Transmission fluid

171. **Worksheet** Service/Adjust throttle valve/kick down cable.

If a kick-down cable is fitted, the correct amount of lost motion (movement that does nothing) should be set. This is so that it only pulls the valve in the transmission, when the throttle pedal is pushed all the way to the floor. Make sure the engine is NOT running.

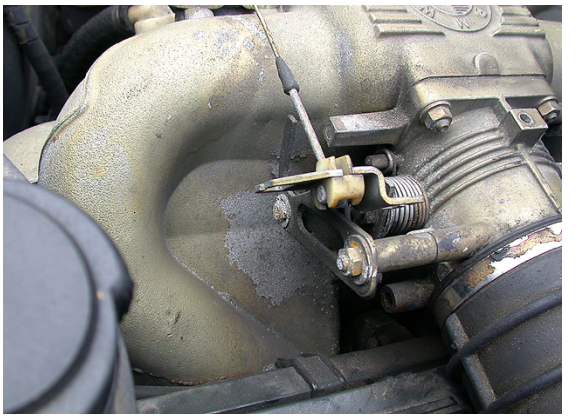

Throttle cable

Kick-Down Adjustment Get an assistant to push the throttle pedal down slowly while you watch the throttle spindle and kick-down cable movement. Alternatively, move the throttle by hand from within the engine compartment. If the pull on the cable is incorrect, adjust the position of the outer sleeve until the movement is as specified. This is often a figure of 10 mm to 15 mm or about half an inch.

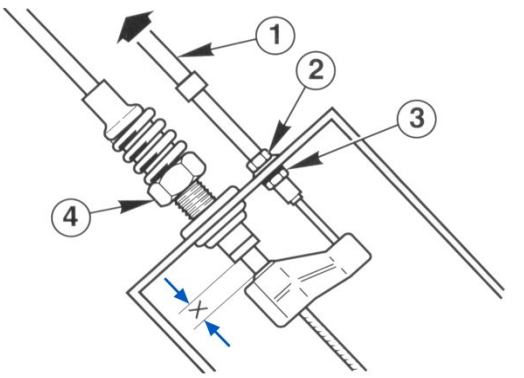

Kick down or throttle valve cable[1]

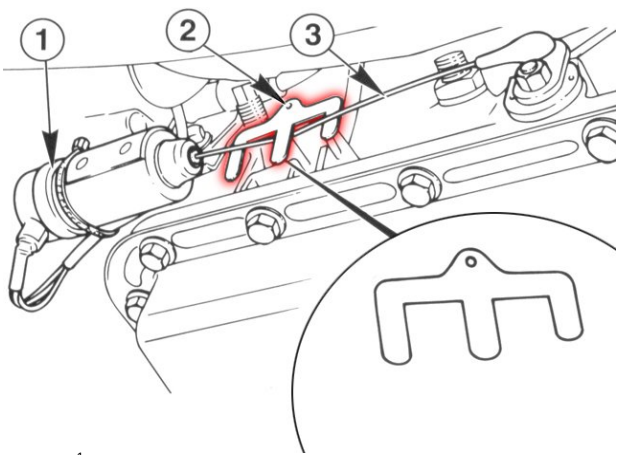

Adjuster[1]1

Automatic Adjuster Many systems include an automatic adjuster. If this is the case, depress the readjust tab and move the slider away from the linkage. Manually turn the throttle to the wide-open position, which will automatically make the adjustment. Do not use excessive force in case there is a problem with the cable. After adjustment, check for correct operation.

Summary Safety of all road users and pedestrians is essential. Reliable operation of the vehicle is also important. The condition of all systems is therefore vital. Carry out a check at all service intervals.

Safety is important[2]

Read the previous section again and note down some key bullet points here:

-
-
-
-
-

Remove, Replace, Strip and Rebuild Components

Introduction Tasks involving the removal of major components, such as an automatic transmission, are similar on most vehicles. However, it is the smaller associated items that make the difference. Cables, pipes or wire connections vary considerably across makes and models. Take your time, and always work safely.

172. **Worksheet** Remove and refit automatic transmission.

Fit a car protection kit as required to prevent damage to the vehicle. Disconnect the battery ground cable and fit a memory keeper, if necessary. Drain the fluid from the transmission.

Disconnect the battery

Car protection

Remove Transmission Disconnect the throttle valve/kick-down cable if fitted. Remove the transmission fluid dipstick and any other components, which impede movement or could be damaged as the transmission is removed.

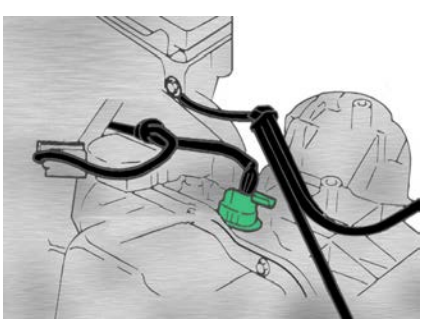
Disconnect electrical connections

Torque Converter Raise the vehicle on a hoist and remove, if required, the exhaust system. Disconnect and label all electrical connections on the transmission (inhibitor switch, reverse switch and sensors/actuators, for example). Disconnect the shift control/gear selector mechanism. Remove the lower cover to access the torque converter. Scribe a line on the drive plate and converter so that they can be reassembled in their original positions. Remove the converter-to-drive-plate nuts and/or bolts. Turn the engine over by hand to do this. Remove the propshaft/driveshaft and associated support bearings as required. Position a suitable transmission jack underneath and secure it to the transmission.

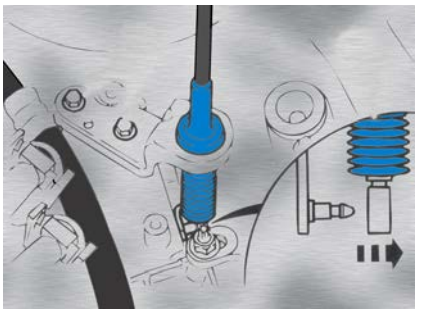
Disconnect the selector cable…

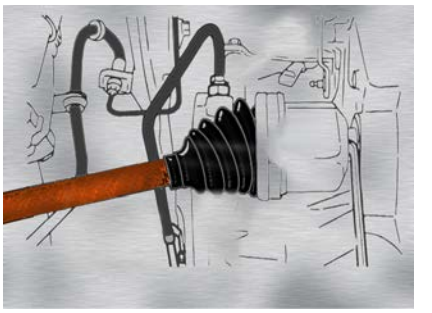
Oil pipes front…

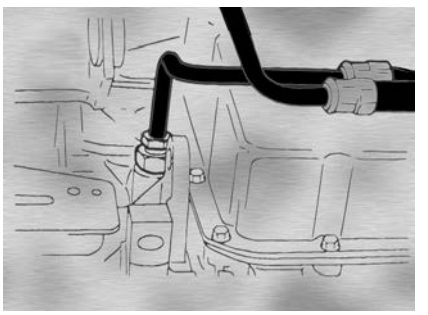
Rear…

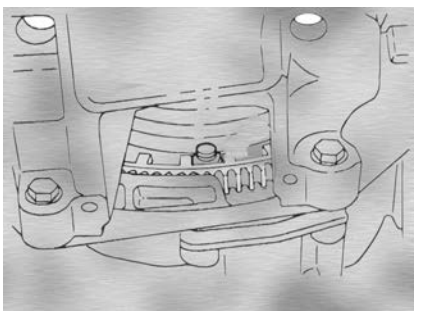
And the torque converter

Supporting the Transmission Raise the jack slightly and then remove the transmission support beam. Lower the transmission slightly to allow access to any other components. In particular, the transmission-fluid cooler pipes and the throttle valve/kick-down cable, if fitted. Support the engine, if necessary, using an axle stand underneath or a support bar from above. Remove the engine-to-transmission bolts. Double-check that all cables and wires are disconnected. Separate the transmission from the engine and lower it. Make sure the torque converter stays in the transmission housing. Secure this with a support bar if necessary. Remove the transmission from the vehicle.

Gearbox on a transmission jack

Refit Transmission Refitting is a reversal of the removal process. However, a few pointers may be necessary. Make sure the converter rotates freely before securing it to the driveplate. Ensure all nuts/bolts are tightened to the recommended torques.

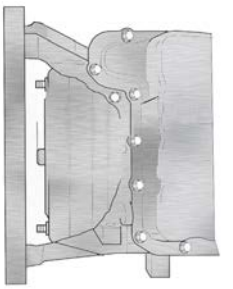

Align the converter…

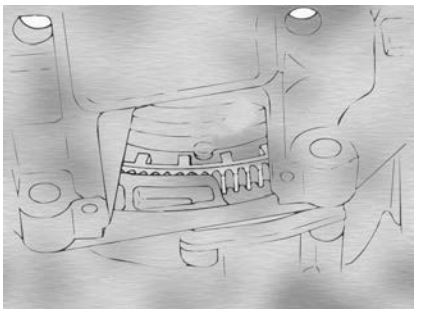

And secure it to the drive plate

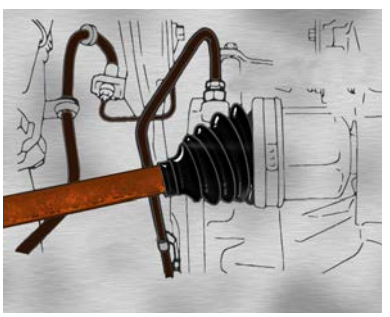

Connect rear…

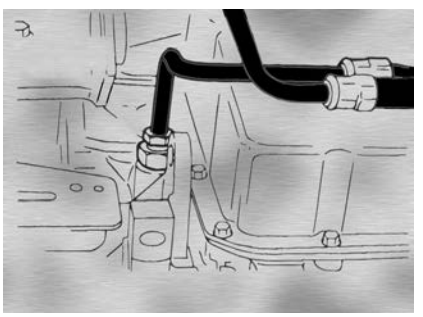

And front oil pipes

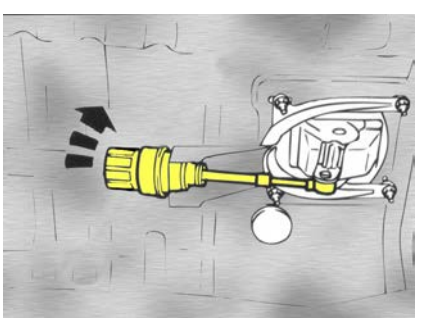

Unlock…

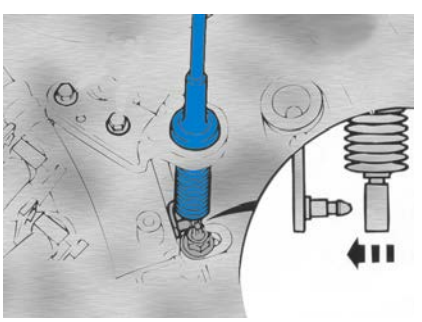

And attach the selector cable…

Selector Mechanism Adjust the shift mechanism and the throttle valve/kick-down cable. Fill the transmission with the recommended quantity and type of fluid. To do this, follow the fill procedure outlined on the servicing worksheet.

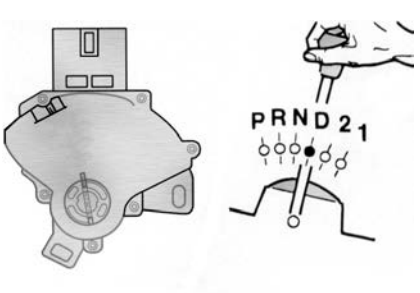

Move the shift lever to 'D'…

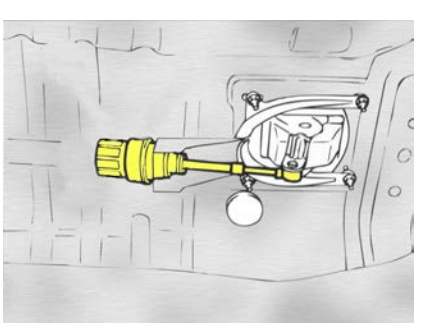

And lock the cable

Summary To complete any major work, road test the vehicle and check for correct operation. Last, but not least, return to the workshop for a final inspection for security and leaks.

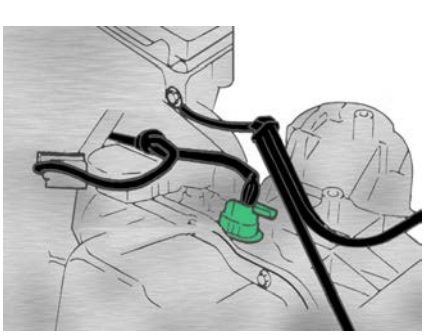

Connect electrical connections and…

Road test[2]

173. **Additional Worksheet** Transmission assembly (RWD) dismantle inspect and reassemble

174. **Additional Worksheet T**ransmission assemble (FWD) - dismantle inspect and reassemble

Read the previous section again and note down some key bullet points here:

-
-
-
-
-

Fault Diagnosis

Checking the System

Introduction System performance checks are routine activities that occur during all servicing work. They start at pre-delivery and continue for all scheduled service intervals.

Systems need checking regularly[1]

175. **Worksheet** Check/Inspect automatic transmission and torque converter.

Connect a remote starter switch from the main positive starter supply to the solenoid-operating terminal. Raise the vehicle on a suitable hoist. Remember to make sure it is secure on the hoist and that the gear selector is in the "P" (park) position. Make sure the ignition is turned OFF. Inspect the transmission from above and under the vehicle. Report any problems such as oil leaks or loose mountings.

Remote starter connection

Check Transmission Check all areas of the transmission by eye and by moving your hands over the surfaces. Beware of sharp objects. This is a good way to get a “feel” for the system. Check all housings for leaks and cracks. Check for leaks from output oil seals and all other extra components such as switches or sensors. Check any linkages and cables for correct fitting and free movement. It may be necessary to have someone assist you from within the vehicle. Remove, where possible, the access cover for the torque converter.

Inspect the general system

Torque Converter Check all areas of the transmission by eye and by moving your hands over the surfaces. Beware of sharp objects. This is a good way to get a “feel” for the system. Check all housings for leaks and cracks. Check for leaks from output oil seals and all other extra components such as switches or sensors. Check any linkages and cables for correct fitting and free movement. It may be necessary to have someone assist you from within the vehicle. Remove, where possible, the access cover for the torque converter.

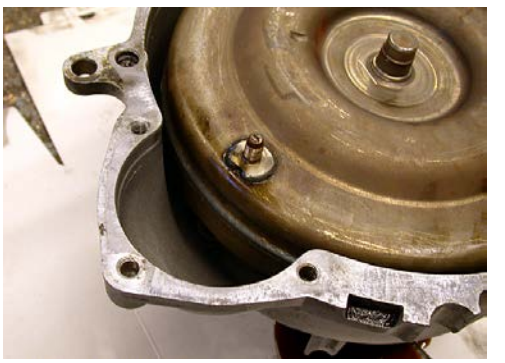
Torque converter access when starter removed

176. **Worksheet** Check/Diagnose automatic transmission system by stall testing.

NOTE: Stall testing can be dangerous. Do not let anybody stand in front of the vehicle when this test is being carried out. The parking and foot brakes must be inspected for correct operation and then fully applied at all times during a stall test. Block the wheels as an added precaution. A stall test involves measuring the maximum revolutions per minute of the engine, when the transmission is in gear and the vehicle is not moving. Install a car protection kit as appropriate.

Block the wheels to be safe

Stall Testing Check/Diagnose automatic transmission system by stall testing.

NOTE: Stall testing can be dangerous. Do not let anybody stand in front of the vehicle when this test is being carried out. The parking and foot brakes must be inspected for correct operation and then fully applied at all times during a stall test. Block the wheels as an added precaution. A stall test involves measuring the maximum revolutions per minute of the engine, when the transmission is in gear and the vehicle is not moving. Install a car protection kit as appropriate.

Caution Do not hold the test for more than five seconds. Select neutral and run the engine, at about 1,000 rev/min for a minute or two to cool off the transmission. Repeat the previous three steps in each gear. Each time, carefully observe the readings.

Transmission shift lever

Stall Speed A very low stall speed indicates a poorly performing engine. This can be caused by something as simple as incorrect ignition timing. A lower-than-specified stall speed indicates a poorly performing torque converter. The one-way clutch (sprag) may not be holding. When the engine stalls at a higher-than-normal speed, the clutch packs may not be holding. Pressure tests need to be run on the transmission to find the problem. Check data for specific details. Remove all test equipment and the protection kit.

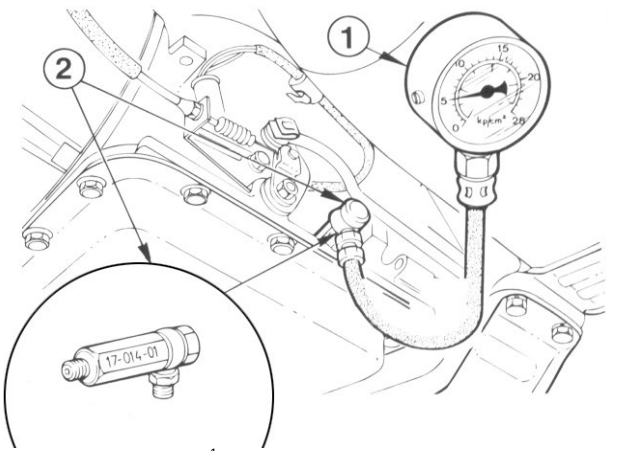

Pressure test connection[1]

Summary System performance checks are often quite simple. However, they are important. Cars are used at high speed and sudden breakdowns can be dangerous. Therefore, the systems should function correctly at all times.

Read the previous section again and note down some key bullet points here:

-
-
-
-
-

Inspect and Measure Components

Introduction The main inspections and measurements carried out to the system are included in this section. Inspections should take place at scheduled service intervals, and if problems have been reported.

Inspections and measurements are important

177. **Worksheet** Measure/Inspect automatic-transmission system pressure.

An oil cooler pipe connection may be used

Fit car protection kit as appropriate. Locate test specifications and test points in the manufacturer's manual. Connect a tachometer to the engine. Check and top off the fluid level if necessary. Make sure the correct type of fluid is used. Get an assistant to operate controls as requested. On a wheel-free hoist, raise the vehicle to a comfortable working height.

Caution! Make sure suitable extraction equipment is fitted, and run the engine up to normal temperature. Switch off the engine and connect a pressure gauge to the specified test port. Connect a vacuum gauge, using a "T" piece, to the vacuum modulator or control diaphragm (if fitted). NOTE: If you need to be under the vehicle to take pressure readings, take extreme caution because the driveline and wheels will be moving during the tests. The exhaust will also be very hot!

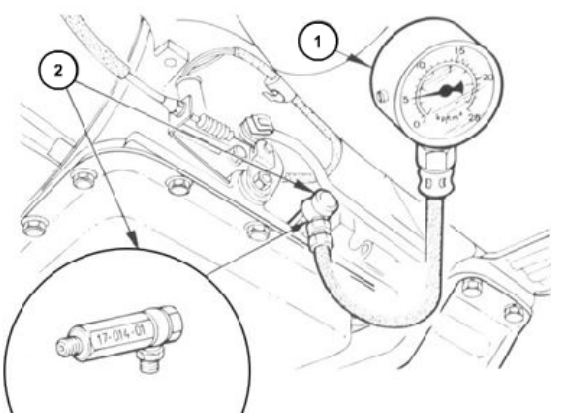

Pressure gauge connected[1]

Pressure Testing Start the engine and move the selector to the first test position. Run the engine at the specified revolutions per minute. Take the pressure and vacuum readings. Make a note of these readings for comparison to the manufacturer's data. Reduce the engine speed and then press gently on the brake pedal to stop the wheels from moving. Connect the pressure gauge to other ports as specified and take readings as before. Remove all test equipment and make sure the blanking plugs are refitted securely.

Oil cooler ports used for testing

178. **Worksheet** Measure/Inspect automatic transmission brake bands.

Brake bands

Note: This is a generic procedure. There are differences in procedures between manufacturers and their models; always refer to specific instructions for the vehicle on which you are working. Fit car protection kit as appropriate. Run the vehicle (on a road test, if possible) until it is at normal operating temperature. A road test also warms the transmission.

Brake Band Operation Brake bands operate on to rotating drums. If the clearance is too large, individual drive ranges will not operate because the band will slip. If the clearance is too small, the result will be increased wear and overheating of the band. Most adjustments are carried out externally. However, in some cases, it will be necessary to remove the transmission sump/pan and drain the oil.

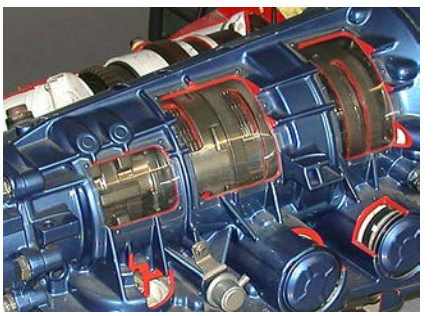
Brake bands in position

Brake Band Adjustment Undo the lock nut, which is usually outside the adjusting screw. Loosen the adjusting screw slightly and then tighten it back up by hand. Make sure the threads are clean if the adjuster is external, as this can affect the torque setting. Fit a suitable torque wrench with adapters as required and tighten the adjuster to the specified torque. Repeat the previous three procedures on any other adjusters. Refit the pan (if removed), fill with the correct oil and then road test for correct operation.

Setting the torque

Other Adjustment Methods Alternative procedures, include tightening the adjusters and then backing off a set number of turns, or using a dial gauge to set position of an adjuster.

Modern gearbox[2]

Summary Some repairs can involve significant work. However, do not make any compromises. Keep your customers, and yourself, happy and safe.

Transmission in use[2]

Read the previous section again and note down some key bullet points here:

-
-
-
-
-

Faultfinding and Inspections

Introduction The secret to finding faults is to have a good knowledge of the system and to work in a logical way. Use manufacturer's data and recommended procedures. This section includes general and specific faultfinding procedures.

Symptoms and Faults Remember that a symptom is the observed result of a fault. The next few screens each state a common symptom and possible faults. It is important to note that faults in one system can produce symptoms that may appear to be caused by another.

Fluid Leaks Faults that are possible causes of this symptom are:

Gaskets or seals broken or worn

Dip stick tube seal

Oil cooler or pipes leaking.

Check for signs of leaks

Discolored and/or Burnt Smell to Fluid Faults that are possible causes of this symptom are:

Low fluid level

Slipping clutches and/or brake bands in the gearbox

Fluid that needs changing.

Fluid condition is a useful pointer

Gear Selection Fault Faults that are possible causes of this symptom are:

Incorrect selector adjustment

Low fluid level

Incorrect kick-down cable adjustment

Load sensor fault (may be vacuum pipe, etc).

Kick-down cable

No Kick-Down Faults that are possible causes of this symptom are:

Incorrect kick-down cable adjustment

Kick-down cable broken

Low fluid level.

Check fluid level

Engine Will Not Start or Starts in Gear Faults that are possible causes of this symptom are:

Inhibitor switch adjustment incorrect

Faulty inhibitor switch

Incorrect selector adjustment.

nhibitor switch

Transmission Slip, No Drive or Poor Quality Shifts Faults that are possible causes of this symptom are:

Low fluid level

Internal automatic-gearbox faults (these often require the attention of an automatic-transmission specialist).

Auto-gearbox[2]

ECAT System Reduced Performance or Not Working Faults that are possible causes of this symptom are:

Low fluid level

Internal automatic-gearbox faults (these often require the attention of an automatic-transmission specialist).

Electronically controlled valve block[4]

Systematic Testing Working through a logical and planned systematic procedure for testing a system is the only reliable way to diagnose a problem. Use these six stages of faultfinding as a guide.

Verify the fault

Collect further information

Evaluate the evidence

Carry out further tests in a logical sequence

Fix the problem

Check all systems.

Faultfinding Procedure As an example of how the stages are applied, assume the reported symptom is that the kick-down does not operate. The recommended method would be to carry out the procedures outlined over the next five screens.

Check the latest data

Verify the Fault Road test to confirm the problem. Make sure you try the operation in different gears and under different conditions.

Collect Further Information Talk to the driver if possible and ask questions:

Does the problem get worse when the engine is hot?

Has work been done to the engine?

Has the problem just started or developed slowly?

Finally, don't forget the obvious – check the transmission fluid level!

Check fluid level

Evaluate the Evidence If fluid level is correct, then you will need to investigate further. Recent work on the engine may have disturbed the kick-down cable. Alternatively, the cable may simply need adjusting.

Kick-down cable

Carry out Further Tests Check the adjustment and fitting of the kick-down cable. With the car on a suitable hoist (if necessary), get an assistant to operate the throttle while you check cable movement. If it appears correct, check and adjust the cable anyway. This will create a “known good” that you can rely on as other tests are carried out. If all is in order, the next operation could be to carry out a stall test. Worksheets are available for both of these activities.

Cable connection lever

Rectify the Problem For this example, assume that the cable was broken or required adjustment. Install a new cable or make adjustments as required. Remember to check the latest data.

Cable adjustment

Check All Systems When working on one part of the engine, It is possible to disturb components in another. Run through a quick check of all systems to make sure they operate correctly. It is also possible, even though the cable has been repaired, that another automatic-transmission fault exists. Ensure everything works before returning the car to the customer.

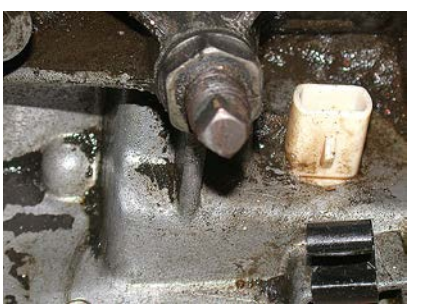
Check other areas carefully

Summary Faultfinding work is rewarding – when you find the fault! Remember to always work in a logical way. The stages of faultfinding can be applied to all systems on the vehicle, complex or simple.

179. **Additional Worksheet** Road test for unknown faults

Read the previous section again and note down some key bullet points here:

-
-
-
-

Engine Repair

Safety and customer care

Health and Safety

Health & Safety This section highlights some of the specific hazards associated with engines and should be studied before carrying out any engine repair work. The health and safety section in the introduction learning program should be carefully studied before this section and before carrying out any practical activities. There are a number of hazards associated with inspecting and working on engines. These include: Heavy loads - lifting and supporting the vehicle, lifting and supporting the engine. Running engines - rotating machinery and exhaust gases. High temperatures. Engine oil. Sharp edges and cleaning materials. Precautions against these hazards should be taken for personal safety and for the safety of others.

Safety is very important

Lifting and Supporting the Vehicle Lifting and supporting the vehicle should follow standard safe working practices, particularly when under-vehicle inspection and repair work is required. The vehicle should be lifted on the manufacturer's specified lifting and supporting points. When using a vehicle lift, do not exceed the safe weight limit (SWL) and be careful to distribute the weight so that the vehicle does not over-balance when the weight of the engine is transferred to the engine crane or taken by a trolley.

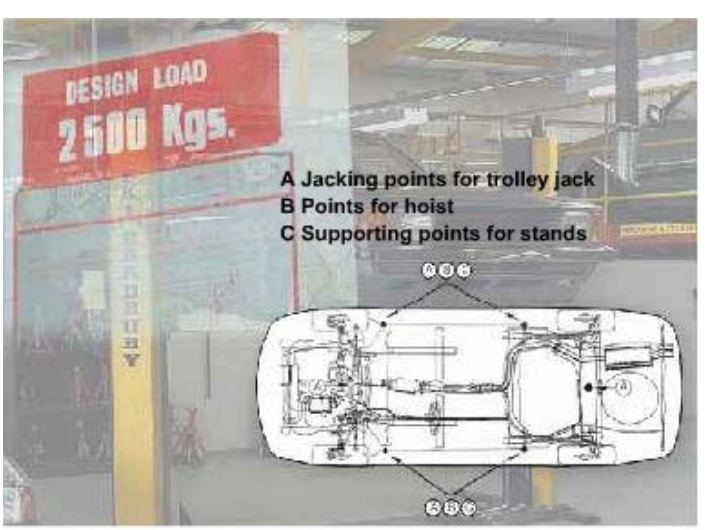

Use lifting gear with care

Mechanical Lifting When lifting an engine, inspect the crane and chains, or slings and ropes before use. Always keep sling legs as long as possible to reduce the strain in each leg. Exceeding an angle of 90° should be avoided. The stress in the pair of legs is approximately one and a half times the weight of the engine at a 90° angle. Carefully select the lifting eye positions to ensure that they will not bend or shear. Keep fingers and hands clear of the sling as the weight is taken up, as this is the most likely time to get caught. During the lifting operation when the engine is being guided within the engine compartment, keep hands clear so that they are not trapped or squashed. Also be careful not to damage to other components of the vehicle.

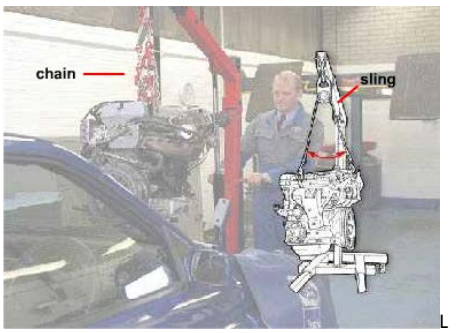

Lifting an engine

Manual Lifting Engines and some engine components may need to be manually lifted. Always plan ahead with manual lifting to ensure that the weight is manageable and that the technique used avoids sudden twists and strains on the spinal column and back muscles.

Get help if necessary

Running Engines When working under the hood or under the vehicle itself with the engine running, remain aware of rotating parts and keep hands clear. Check rotating components, such as the cooling fan, for condition and security before starting the engine. It is important to tie back long hair and loose clothing and to remove hanging jewelry. Engines, exhaust and cooling system components get very hot and can cause severe burns. Be extremely careful. Exhaust gases are dangerous in confined places. Always use a well-ventilated workshop or exhaust extraction equipment. Stop working immediately if you feel drowsy and go outside into fresh air.

Running engine can be dangerous

Engine Oils Avoid skin contact with new and used engine oils. Use barrier cream or non-porous gloves. Be careful with hot oil. Dispose of used engine oil through a licensed waste disposal company or at an approved collection point. Never pour any oils into a drain or onto the ground. Oils can cause cancers.

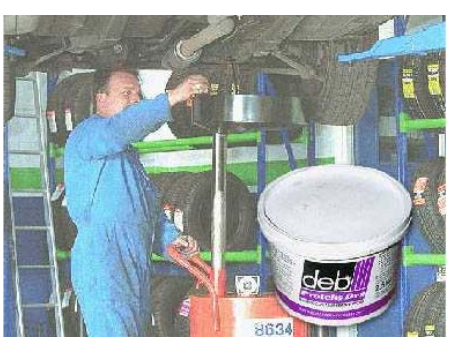

Always wear gloves or use barrier cream

Sharp Objects Engine components are made from hard materials by various manufacturing methods that can produce very sharp corners. Minor cuts are common, but more serious cuts can occur. Always treat cuts and abrasions immediately. Use tools that enable you to keep your hands away from sharp points during close work. Socket extensions are an example of such tools.

Sharp objects cut!

Protective Clothing During cleaning operations, chemicals, hot water or steam are used. Wear the protective clothing and follow the procedures described in the manufacturer's manuals or data sheets.

Wear protective clothing - for your own protection

Specific Lubrication System Related Hazards Before carrying out any service or repair work on the engine and lubrication system - always follow all safety procedures and observe safety precautions when working on vehicles. The specific hazards associated with the lubrication system are the same as for the engine.

Engine Oils Before working on or removing engines for major repair work. Refer to the Health and Safety section in the engine mechanical learning program. In particular, be aware of the danger of hot oil, the health hazards of engine oils and proper disposal to avoid environmental contamination.

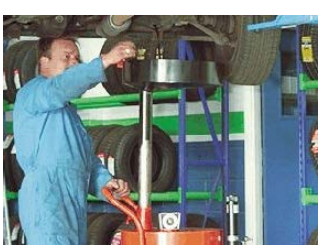
Oil drainer in use

Other Hazards Other hazards include working below vehicles, lifting and moving heavy loads such as engines and sub-frames and the risks from sharp edges and springs flying out from pressure-relief valves.

Take care under a vehicle

Skin Contact with Engine Oils Avoid skin contact with new and used engine oils. Use barrier cream or non-porous gloves. Be careful with hot oil, particularly when carrying out oil-draining operations.

Use gloves or barrier cream

Oily Rags and Contaminated Clothing Never keep oily rags in overall or other pockets and change out of oil-contaminated clothing as soon as reasonably possible.

Be smart, don't be an oil rag…

Disposing of Used Engine Oils For disposal of used engine oil, used a licensed waste disposal company or transport the oil to an approved collection point. Never pour any oils into a drain or onto the ground. Oils can cause cancer.

Refer to local regulations for disposal requirements

Grade and Type of Oil Always be careful to use the correct grade and type of oil for oil changes.

Using the correct grade is essential

Pressure-Relief Valves Pressure-relief valves are controlled by spring tension. Always wear safety goggles when removing and replacing these as they can in some cases fly out with their own spring force.

Any component under spring tension presents a risk

Boiling Coolant The temperature of the coolant can be at a higher temperature than its boiling point, when it is pressurized.

If pressure is suddenly lost because the pressure cap is removed, the coolant will immediately boil, resulting in steam and very hot water being violently ejected. Always allow the engine to cool before removing the pressure cap.

Danger!

Electric Cooling Fans An electrically driven fan is switched on automatically when the temperature of the coolant in the radiator rises above a set temperature. This can occur even when the ignition is switched off. Always keep fingers and clothing out of the fan cowl. Remove the battery ground when working near or on the fan motor.

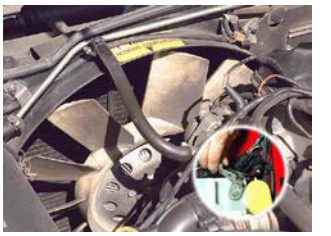
A fan can start at any time

Exhaust Gas Prevent the build-up of exhaust gas in the workshop by using extraction equipment or by providing good ventilation.

Always use exhaust extraction

Antifreeze Ethylene glycol is a skin irritant and toxin. It is harmful to the environment when it can seep into underground water supplies. Handle ethylene glycol with care. Avoid skin contact by wearing rubber or latex gloves and goggles; wash any spills immediately. Read the data sheet that is available from the suppliers of the product. The disposal of waste coolant and ethylene glycol is subject to strict environmental regulations in many countries.

Danger

Antifreeze container

Antifreeze Disposal Antifreeze must not be poured into sewers or onto the ground. Check with the appropriate environmental protection agency in your area for the correct disposal procedures.

Dispose of antifreeze carefully

Air Conditioning Where vehicles are fitted with air conditioning, it is important that no refrigerant pipes or hoses are undone or disconnected unless the system has been emptied by a competent and authorized person. Two types of refrigerants are used: R12 and R134a; these cannot be mixed. They are harmful to the environment and present a severe risk of freeze damage to skin and flesh.

Air conditioning components

Refrigerant Refrigerant in the air conditioning system is under pressure. If a seal is broken, it will gush out. If there is any potential risk of refrigerant escaping, wear reinforced rubber or PVC gloves. Do not use leather gloves, which offer little protection. Also, wear a face shield and keep arms and body covered with protective overalls.

Personal protective equipment

Read the previous section again and note down some key bullet points here:

-
-
-
-
-

Tools and Equipment

R&R Components A good general tool kit will be needed for engine repair work. There are some special tools, equipment, and materials that will also be needed. Refer to manufacturer's workshop manuals and data books for precise instructions on the applications and uses of these special tools.

Snap-on tools

Engine Position Locking Pins These are used on overhead camshaft engines and diesel engines to hold the crankshaft, camshaft and diesel injector pump drive gears in position for fitting of toothed drive belts and timing diesel injector pumps.

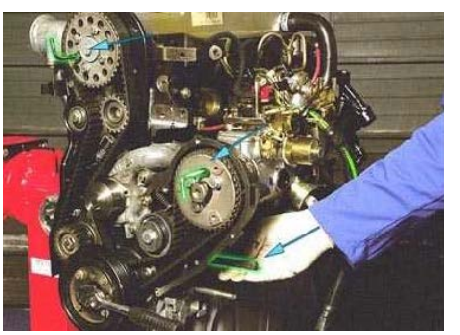
Lock pins hold the engine in position

Toothed Cam Belt (Camshaft Drive Belt) Adjusting Wrenches Many manufacturers require toothed belts to be tightened to a specified torque with a special tool that fits the tensioner. This may be a large wrench fitting the water pump on some gm vehicles or a square key for holding an eccentric tensioner at a specified torque as the securing bolt is tightened.

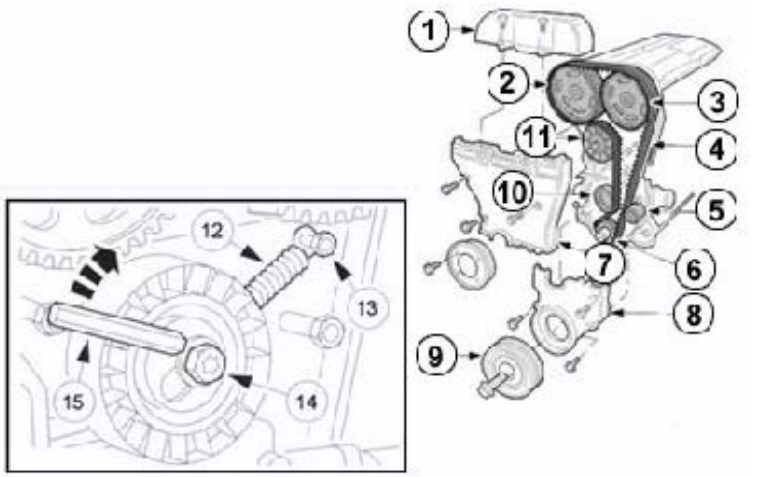

Cam belt features[1]

Clutch Alignment Tools The center plate of clutches has to be centralized during assembly of the clutch to the flywheel. This enables the gearbox-input shaft to pass through the clutch and into the pilot bearing. There is little tolerance for inaccurate alignment. Two types of tool are available: a special tool suitable for a single or range of engines or a general-purpose kit consisting of a holder, a range of flywheel pilot hole bosses and a range of center plate bushes. An input shaft from an old gearbox can also be used for this task.

Aligning the clutch

Clutch Alignment Clutch alignment tools are selected and assembled to fit through the clutch and into the flywheel pilot bearing. The clutch is progressively tightened with the alignment tool in place to maintain the centralization on the clutch and flywheel. The tool should be easily removed and refitted to check that the parts are concentric.

The plate must be central

Valve Removal and Installation Tools Clutch alignment tools are selected and assembled to fit through the clutch and into the flywheel pilot bearing. The clutch is progressively tightened with the alignment tool in place to maintain the centralization on the clutch and flywheel. The tool should be easily removed and refitted to check that the parts are concentric.

Valve spring compressor

Valve Compressor Clutch alignment tools are selected and assembled to fit through the clutch and into the flywheel pilot bearing. The clutch is progressively tightened with the alignment tool in place to maintain the centralization on the clutch and flywheel. The tool should be easily removed and refitted to check that the parts are concentric.

Spring compressed

Spring Compressors Clutch alignment tools are selected and assembled to fit through the clutch and into the flywheel pilot bearing. The clutch is progressively tightened with the alignment tool in place to maintain the centralization on the clutch and flywheel. The tool should be easily removed and refitted to check that the parts are concentric.

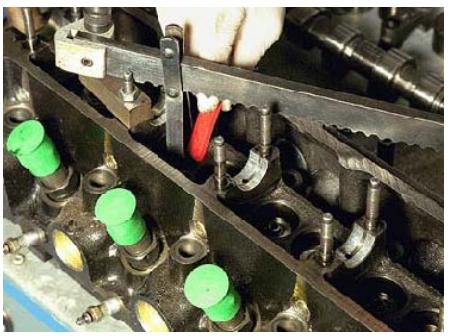
Special tools may be needed

Valve-Seat Cutting and Lapping Tools Clutch alignment tools are selected and assembled to fit through the clutch and into the flywheel pilot bearing. The clutch is progressively tightened with the alignment tool in place to maintain the centralization on the clutch and flywheel. The tool should be easily removed and refitted to check that the parts are concentric.

Valve and lapping tool

Check Valve Guides Before cutting the valve seats, check that the valve guides are not worn as the cutting tools centralize in the valve guide.

Check for freeplay

Valve-Seat Inserts Some of the valve-seat cutting tools can also be used to cut out valve seats and leave parallel sides ready for the pressing in of valve-seat inserts. Very accurate machining is required as the inserts are retained by interference fit and pressed in after cutting. The inserts are then refaced to be concentric with the valve guide.

Valve Seats The sealing of valve seats is usually finished by lapping the valves to their individual seats. This is done with a paste on the valve-seating areas and the valve being rotated with a hand-held rubber suction tool. A finished valve and seat have a complete even ring with a dull gray appearance.

Valve lapping

Valve Guide Removal and Replacement Parallel punches and mandrels are used to press or knock out and replace valve guides. The position of valve guides is given in technical data lists and refers to the extension of the guide out from the head. If this data is not available before removal, measure all guides to obtain the specification. Measuring one guide only is insufficient as guides have been known to move in service, and it is possible that inlet and exhaust have different specifications.

Guide removal

Spark Plug Thread and Chaser Parallel punches and mandrels are used to press or knock out and replace valve guides. The position of valve guides is given in technical data lists and refers to the extension of the guide out from the head. If this data is not available before removal, measure all guides to obtain the specification. Measuring one guide only is insufficient as guides have been known to move in service, and it is possible that inlet and exhaust have different specifications.

Thread chaser

Helicoils Where sparkplug threads have been damaged it is possible to fit a thread insert. These are threaded sleeves or 'helicoils,' which are shown here. The thread is cut with the special tap provided and the new thread 'threaded' in with the fitting tool.

Helicoil kit

Piston Ring Removal and Replacement Tools Where sparkplug threads have been damaged it is possible to fit a thread insert. These are threaded sleeves or 'helicoils,' which are shown here. The thread is cut with the special tap provided and the new thread 'threaded' in with the fitting tool.

Piston ring tool

Ring Groove Scrapers The piston ring groove accumulates hard carbon deposits, which must be removed when new rings are fitted to old pistons. Any deposit left will prevent the ring from seating in the groove, and this can lead to difficulties in fitting, fracture of the rings in service and other ring and piston damage. A series of scrapers allows selection of an appropriate size for the ring groove width. The scraper is pulled around the piston until the groove is clean. This type of tool is not available in some markets. An alternative method has been to use sections of broken ring as ring groove scrapers. This practice requires special care as the broken ends are sharp and cause frequent cuts to fingers and hands.

In the groove…

Computer Saver This is a separate battery source that is plugged into the cigarette lighter so the vehicle battery can be disconnected for safe working on the vehicle. At the same time computer memory, and radio and clock settings are retained. It has led displays to confirm correct reconnection of the vehicle battery. It does not provide protection from possible damage from electric arc or MIG welding, where the unit must be fully disconnected and, in some instances, removed from the vehicle.

Memory keeper

Engine Cranes, Slings and Chains Commercial engine cranes are hydraulic types using a pump and ram to give a mechanical advantage and precise control. The safe weight limit (SWL) should be above the weight of the engine and the transmission if the two are to be removed together. Suitable eye bolts or lifting brackets are fitted to the engine and a sling or chain attached with threaded shackles. The legs of the sling should be long enough to keep the angle between the legs below about 60 degrees and at the same time allow the engine to clear the engine compartment before the crane is fully extended.

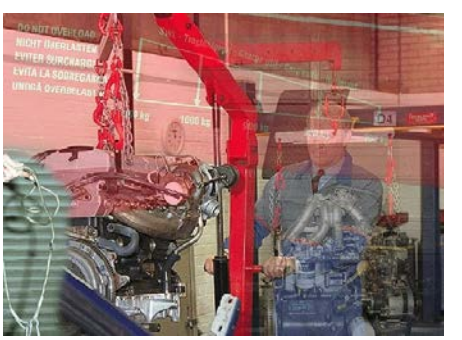
Crane

Lift and Bench Removal Another method of engine removal is the lowering of the vehicle on a lift so that the engine and front cross-member assembly rests on a bench. After the removal of all necessary components and mountings, the vehicle is lifted to leave the engine and cross-member assembly on the bench. A suitable bench must be capable of supporting the assembly and be mobile to assist positioning. Take care to position the vehicle on the lift so that once the engine weight is removed the vehicle does not become overbalanced and topple from the lift.

Car on the hoist and a suitable bench

Engine Support Beam Another method of engine removal is the lowering of the vehicle on a lift so that the engine and front cross-member assembly rests on a bench. After the removal of all necessary components and mountings, the vehicle is lifted to leave the engine and cross-member assembly on the bench. A suitable bench must be capable of supporting the assembly and be mobile to assist positioning. Take care to position the vehicle on the lift so that once the engine weight is removed the vehicle does not become overbalanced and topple from the lift.

Engine support is often vital

Cylinder Reboring Worn cylinders are bored out to a standard oversize with a boring bar. New pistons are fitted to match the increased diameter of the cylinders. Always obtain new pistons before reboring and check the size so that an accurate reboring dimension is achieved. Boring bars require specific instruction. Practice on scrap blocks before regular use.

Crankshaft Regrinding Specialized equipment is required for this type of repair. The equipment is used by specialist engine repairers and engineering companies who usually undertake this work for vehicle repair workshops. New bearings to fit the reground shaft are usually supplied as part of the cost of the job.

Dedicated Tooling Specialized equipment is required for this type of repair. The equipment is used by specialist engine repairers and engineering companies who usually undertake this work for vehicle repair workshops. New bearings to fit the reground shaft are usually supplied as part of the cost of the job.

Special tools

Read the previous section again and note down some key bullet points here:

-
-
-
-

Test Equipment

Engine Analyzer An engine analyzer or diagnostic center is a large item of equipment that incorporates all of the tools used for checking engine system performance. The main item is an oscilloscope used to display the electrical wave patterns of the ignition's low- and high-tension circuits and the alternator output. It also can be used for other electrical or electronic components or systems.

Bosch analyzer

Cylinder Leakage Testers These can be part of an engine diagnostic center or can be freestanding units. Both require a compressed air supply and are used in a similar way. The spark plugs are removed and the engine turned to top dead center (tdc) on the cylinder to be tested.

Leakage test gauge

Cylinder Compression Testers Cylinder compression testers for gasoline and diesel engines are different. Many gasoline types are hand-held into the spark plug hole; others are threaded. Diesel engine compression testers are screwed into the injector pump or glow plug hole. These can be used by cranking or running the engine, depending on the type of tool and the engine manufacturer's instructions. For all compression testing, follow the instructions for the type of tool being used.

Snap-on compression testers

Stethoscope or Sonoscope This is a sensitive sound detector that is used to locate and listen to mechanical noises by touching the probe to the casing of mechanical units. It is useful to locate noises that travel through blocks, housings and casings.

Listen…

Vacuum and Pressure Pump and Gauge Vacuum is measured in inches or millimeters of mercury or in the SI unit of kilopascals (kPa). Two series of tests are made, one with the engine cranking, and the other with the engine running. During cranking a fluctuation of the needle occurs. If the swing is irregular it indicates problems with one or more cylinders, which would require a leakage or compression test to identify.

Measuring vacuum

Read the previous section again and note down some key bullet points here:

-
-
-

Customer Care

Customer Care Fortunately, engine mechanical problems occur infrequently during the life of the vehicle. Assure customers that if they keep a close watch on the engine oil level, pay attention to dashboard instruments and seek advice when unusual noises are heard, they should have no trouble from the engine mechanical components.

Keep customers informed

Service Records Premature failure of cam drive toothed belts us a common fault that leads to engine damage. This fault is often attributed to a lack of inspection and adjustment at the proper service intervals and/or not replacing the belt at the specified mileage or time interval. Customers will appreciate technicians and companies that maintain service records. These can be used to remind customers to bring in their vehicles so that necessary work can be completed.

Belt condition

Maintaining the Correct Oil Level Keeping a close watch on the oil level. Topping off before the minimum mark is reached is important. The auto technician can show the customer how to do this. Although engine oils should be mixable, most companies recommend that topping off should be with the same oil as the original fill. By advising on the brand, grade and quality of the oil used for refilling during service work, you can help the customer to continue with the same oil.

Trouble-Free Engine Customers can be assured that if they keep a close watch on the level of oil in the engine, remain observant of their instruments and seek advice when unusual noises are heard, they should have no trouble from the engine.

Vehicle Service Schedules Most vehicle service schedules provide advice on the grade of oil to be used in different temperature conditions. This may mean that spring and autumn services are required in order to change the oil to an appropriate grade for the season. Keep customer records and advise them of this recommendation.

Short Journeys Abnormal use requires different frequencies for oil changes. Many short journeys prevent the water that accumulates in the oil from evaporating and this builds up and reduces the effectiveness of the lubricant. More frequent oil changes are needed. Service technicians can point out the manufacturer's recommendations for abnormal use and arrange more frequent servicing with the customer.

Operating conditions will affect service intervals[2]

Read the previous section again and note down some key bullet points here:

-
-
-

Theory and technology

Introduction and Operating Cycles

Technology The modern motor vehicle engine is a complex machine and the power plant of the vehicle. The engine burns fuel to obtain power. The fuel is usually gasoline or diesel, although liquid petroleum gas (LPG) is sometimes used, and specialty fuels have been developed for some engines, such as those in certain racing cars.

Engine

Internal Combustion Engine Motor vehicle engines are known as 'internal combustion' engines because the energy from the combustion of the fuel and the resulting pressure from expansion of the heated air and fuel charge is applied directly to pistons inside closed cylinders. The term 'reciprocating piston engine' describes the movement of the pistons, which go up and down in the cylinders. The pistons are connected by a rod to a crankshaft to give a rotary output movement of the engine.

Air and Fuel In gasoline engines, the fuel is metered into the engine together with an air charge. . In diesel engines, the fuel is injected into a compressed air charge in the combustion chamber. In order for the air and fuel to enter the engine and for the burnt or exhaust gases to leave the engine, a series of ports are connected to the combustion chambers. The combustion chambers are formed in the space above the pistons when they are at the top of the cylinders. Valves in the combustion chamber at the ends of the ports control the air charge and exhaust gas movements into and out from the combustion chambers.

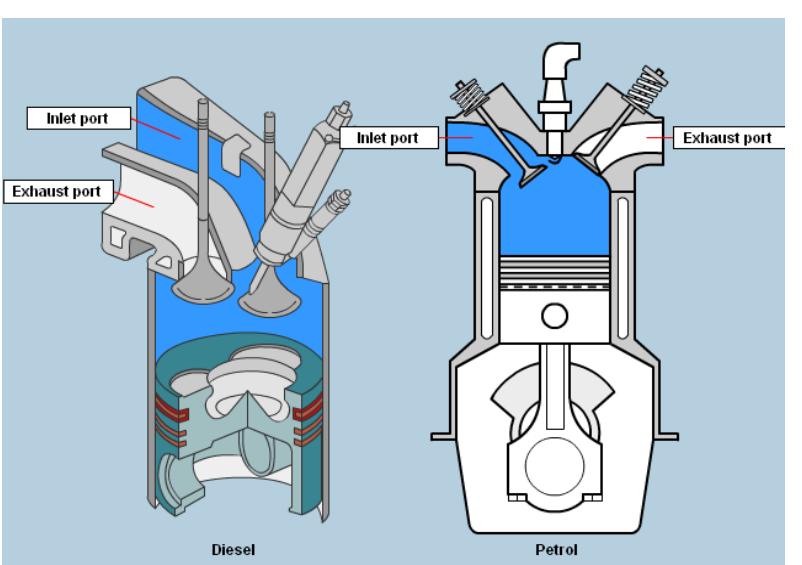

Poppet Valves The valves are 'poppet' and have a circular plate at right angles to a central stem that runs through a guide tube. The plate has a chamfered sealing face in contact with a matching sealing face in the port. The valve is opened by a rotating cam and associated linkage and closed and held closed by a coil spring.

Valves

The Four-Stroke Cycle (or Otto cycle) 💻 The opening and closing of the valves and the movement of the pistons in the cylinders follows a cycle of events called the four-stroke cycle or the Otto cycle after its originator.

Sketch the four strokes of the 4-stroke cycle here

The Induction / Intake Stroke 💻 The four strokes of the four-stroke cycle are:

The induction or intake stroke when the piston is moving down in the cylinder from top dead center (tdc) to bottom dead center (bdc) and the inlet valve is open. The movement of the pistons increases the volume of the cylinder and air and fuel enter the engine.

The Compression Stroke 💻 The second of the four is the compression stroke when the piston moves upward in the cylinder. Both the inlet and exhaust valves are closed and the space in the cylinder above the piston is reduced. This causes the air and fuel charge to be compressed, which is necessary for clean and efficient combustion of the fuel.

The Combustion / Power Stroke 💻 The second of the four is the compression stroke when the piston moves upward in the cylinder. Both the inlet and exhaust valves are closed and the space in the cylinder above the piston is reduced. This causes the air and fuel charge to be compressed, which is necessary for clean and efficient combustion of the fuel.

The Exhaust Stroke Once the energy from the fuel has been used, the exhaust valve opens so the waste gases can leave the engine through the exhaust port. To complete the exhausting of the burnt gases, the piston moves upward in the cylinder. This final stroke is called the exhaust stroke.

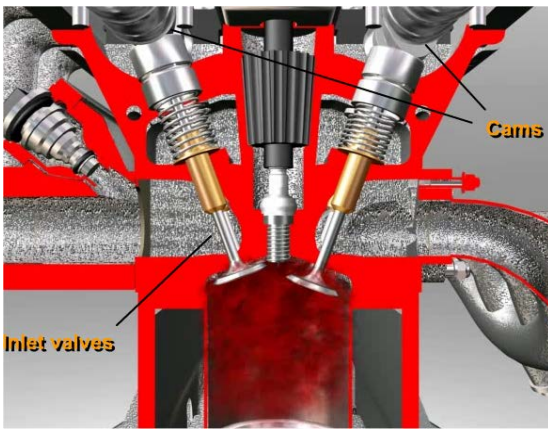

Four-Stroke Cycle The four-stroke cycle then repeats over and over again as the engine runs.

The Induction or Intake Stroke On the induction stroke of a gasoline engine, air and gas enter the cylinder, so the inlet valve in the inlet port must be open. On a diesel engine, only air enters the cylinder. A rotating cam on the camshaft provides a lifting movement when it runs in contact with a follower. A mechanical linkage is used to transfer the movement to the valve stem, and the valve is lifted off its seat so that the inlet port is opened to the combustion chamber.

Cylinder Charge The air and gas charge or air charge can now enter the cylinder. The inlet valve begins to open shortly before the piston reaches top dead center (tdc). The exhaust valve, which is operated by its own cam in the same way as the inlet valve, is beginning to close as the piston passes top dead center (tdc) at the end of the exhaust stroke. Valve overlap helps clear the remaining exhaust gases from the combustion chamber. The incoming air charge fills the combustion chamber as the last quantity of exhaust gas leaves through the exhaust port. This is known as ‘scavenging’ and helps cool the combustion chamber by removing hot exhaust gases and providing a completely fresh air charge.

Top Dead Center (tdc) and Bottom Dead Center (bdc) The terms ‘top dead center’ and ‘bottom dead center’ are abbreviated ‘'tdc’ and ‘bdc,’ respectively. They are used to describe the position of the piston and crankshaft when the piston is at the end of a stroke and the axis of the piston and crankshaft bearing journals are in a straight line and at 0^0 (tdc) and 180^0 (bdc) of crankshaft revolution. To indicate degrees after and degrees before top dead center or bottom dead center, the letter ‘a’ or ‘b’ is added to ‘tdc’ or ‘bdc.’

Rotational Position The rotational position in degrees of crankshaft revolution is used in engine data to show the timing positions for ignition, diesel fuel injection, and the opening and closing of the valves. The data may refer to an actual degree of revolution or be given a relative position before or after top dead center or bottom dead center.

Explain what is meant by ‘internal combustion’.

Explain the four-stroke cycle and why it can be described as ‘suck, squeeze, bang, blow…’

Read the previous section again and note down some key bullet points here:

-
-
-
-
-

Engine Terminology and Systems

Technical Terms The following are some of the technical terms that are used to describe features of the engine: Engine capacity - the displaced volume of all cylinders in an engine given as a cubic capacity. Modern engine capacity is given in cubic centimeters ($cm^{3)}$, or liters ($100cm^3$). American engine capacities are often given in cubic inches ($inch^3$). Swept volume - the displaced capacity of one cylinder. This is the volume of the cylinder between the top dead center (tdc) and bottom dead center (bdc) positions of the piston crown. Clearance volume - the volume in the cylinder (combustion chamber) above the piston when it is at top dead center (tdc). Bore - the diameter of the cylinder. Stroke - the distance between top dead center (tdc) and bottom dead center (bdc). Twice the throw of the crankshaft webs. Compression ratio - the relationship between the total volume of the cylinder and the clearance volume. Values for all these features can be obtained from workshop manuals and data books. They also can be obtained by measurement and calculation.

The following are some of the technical terms that are used to describe features of the engine :

Engine capacity	which is the displaced volume of all cylinders in an engine and is given as a cubic capacity. Modern engine capacity is given in cubic centimeters cm^3, or litres ($100cm^3$). American engine capacities have been given in cubic inches ($inch^3$).
Swept volume	is the displaced capacity of one cylinder and is the volume of the cylinder between the tdc and bdc positions of the piston crown.
Clearance volume	is the volume in the cylinder (combustion chamber) above the piston when it is at tdc.
Bore	is the diameter of the cylinder.
Stroke	is the distance between tdc and bdc and is twice the throw of the crankshaft webs.
Compression ratio	is the relationship between the total volume of the cylinder and the clearance volume.

Values for all these features can be obtained from workshop manuals and data books. They can also be obtained by measurement and calculation.

Swept Volume Swept volume is calculated by the formula: $\pi r^2 \times l$, r = cylinder bore/2, l = stroke. The bore and stroke dimensions must be in the same units of measurement. Cubic inch dimensions have been used, but most modern engines throughout the world are now given in liters as a measure of engine size. 1,000 cubic centimeters equals 1 liter. The engine total displacement or capacity is the cylinder capacity multiplied by the number of cylinders.

Useful formula to learn…

Compression Ratio The compression ratio (CR) calculation uses the formula: Vs + Vc) / Vc. Where CR = compression ratio, Vs = swept volume and Vc = clearance volume. The addition of Vs + Vc must always be completed before the division by Vc.

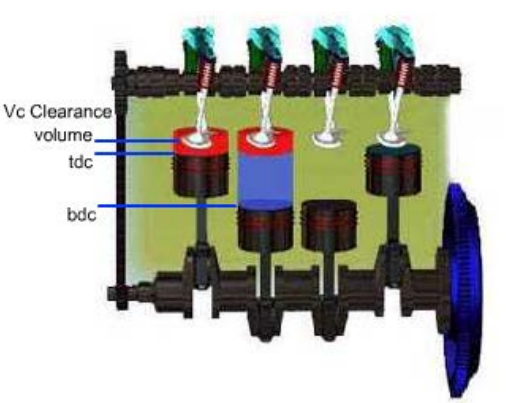

Torque Two other terms applied to engines are 'torque' and 'power.' These refer to engine output. Torque from an engine is a measure of turning force and varies in relation to engine speed and load conditions. Torque is measured in Newton meters (Nm) for SI units and pounds/foot (lbs/ft) in imperial units. Power output is the relationship between the torque output and the speed of the engine. Power output is given in kilowatts (kW) or horsepower (h.p.) And is most commonly stated as the output measured at the flywheel. This is measured by a dynamometer applying a braking force, which leads to the expression 'brake horsepower' (bhp).

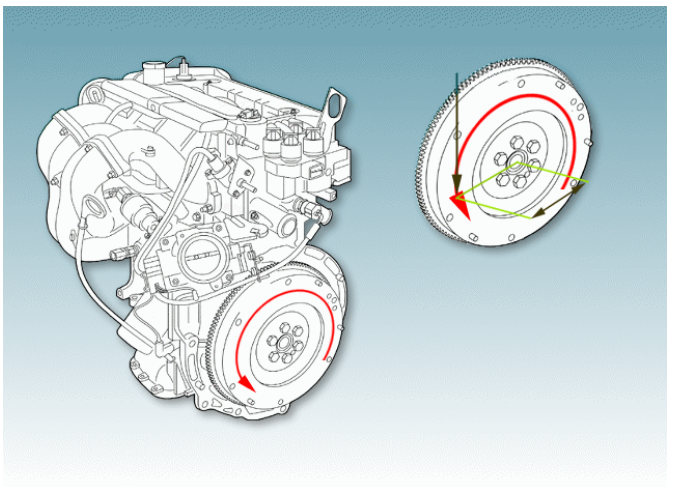

Torque and power

Engine Performance Curves Engine manufactures publish data in graphical form for engine torque and power. Two typical engine performance curves are shown here.

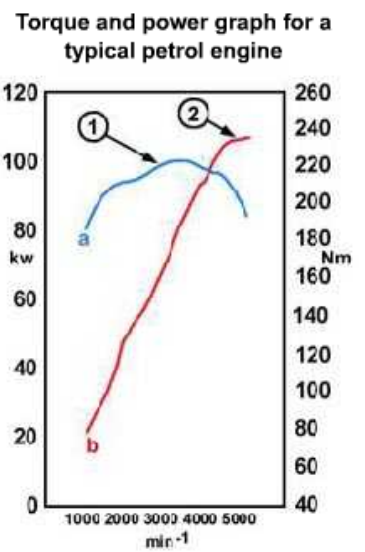

a Torque curve 1 Max. torque
b Power curve 2 Max. power

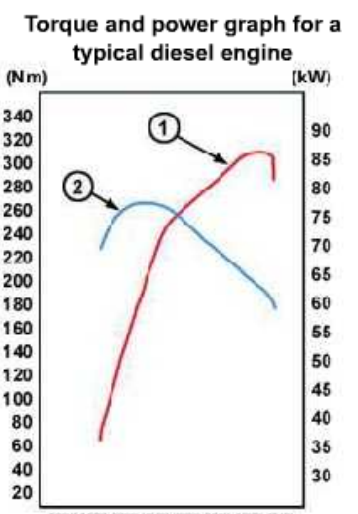

1 Power curve
2 Torque curve

Optimum Cylinder Capacity Engine designers have found that optimum cylinder displacement for high- speed gasoline engines is between 250 cm^3 and 600 cm^3. Cylinder capacities within this range have combustion characteristics that produce high power outputs with efficient use of fuel and low harmful exhaust emissions. Engines with total displacements or engine capacity between 1.0 liters and 2.5 liters are usually designed with 4 cylinders. Multiple cylinder engines give a smooth power output and consistent torque. By reducing the number of cylinders, the manufacturing costs can be less, and this sometimes leads to engines of higher capacity being built with less than the expected number of cylinders.

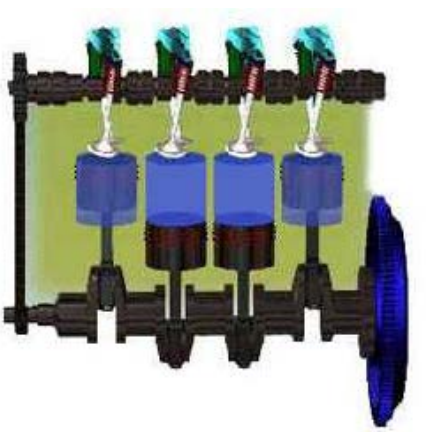

Displacement

Power Strokes per Engine Revolution The smooth performance of an engine can be related to the number of cylinders. This is because with more cylinders there are more power strokes per revolution of the engine. Each power stroke represents a pulse on the crankshaft, and by shortening the frequency and reducing the power of the pulses, a smoother power flow is achieved. Six-cylinder engines with capacities of more than 2 liters give smooth power outputs and optimum cylinder sizes. The length of 6-cylinder in-line engines makes them unsuitable for transverse installation. Therefore, two banks with 3 cylinders each in a vee configuration are a space-saving design. The engine flywheel also acts to smooth the power flow from the engine by carrying the force from each combustion pulse into the next one. The flywheel absorbs the energy during the power stroke and uses the energy to maintain the engine rotation and to compress the air charge on the next firing cylinder.

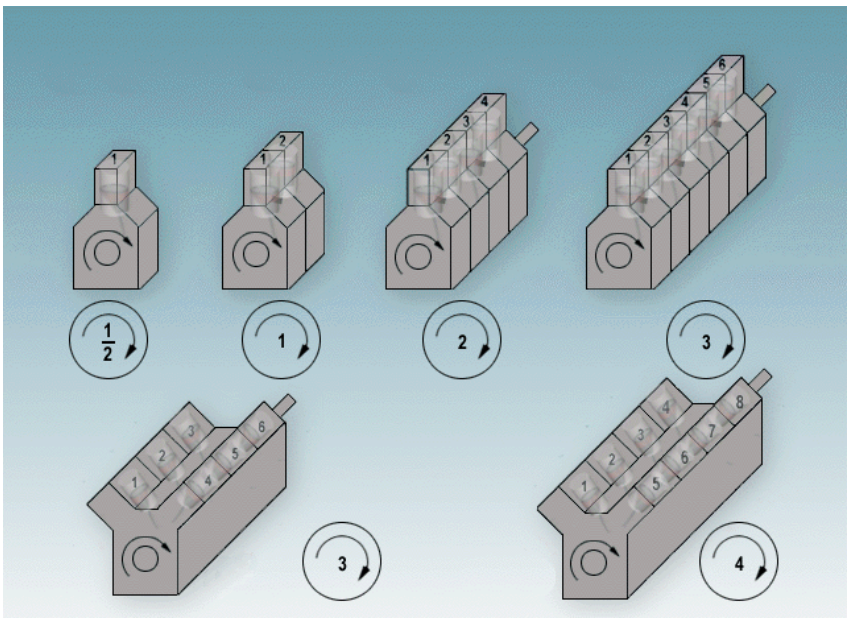

Cylinder layouts and power strokes

Component Technology This section looks at some of the various different designs of engine that are found on modern vehicles. The first is a common layout on many small to medium front wheel drive vehicles. This is a transverse-mounted 4-cylinder 4- stroke single overhead camshaft (OHC) gasoline engine. The engine design allows for a comprehensive repair program up to and including a complete overhaul.

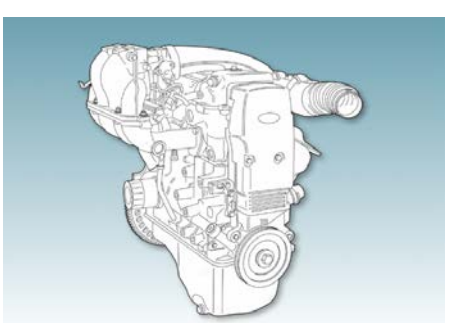
Engine designs vary

Four-Cylinder, Four-Stroke Diesel Engine The second engine design is a 4-cylinder 4-stroke overhead valve diesel engine with indirect injection. This engine represents a traditional type of construction on which it is possible to carry out repairs up to and including complete overhaul with new or refurbished parts. The optimum cylinder capacity for diesel engines can be higher than for gasoline engines. All diesel engines including the smaller high-speed diesel engines are manufactured to withstand high combustion pressures and forces on the piston, connecting rod, and crankshaft. Larger sizes and tougher materials are used for many of the components.

Diesel engine

Special Oils The second engine design is a 4-cylinder 4-stroke overhead valve diesel engine with indirect injection. This engine represents a traditional type of construction on which it is possible to carry out repairs up to and including complete overhaul with new or refurbished parts. The optimum cylinder capacity for diesel engines can be higher than for gasoline engines. All diesel engines including the smaller high-speed diesel engines are manufactured to withstand high combustion pressures and forces on the piston, connecting rod, and crankshaft. Larger sizes and tougher materials are used for many of the components.

Special lubricants

V-6 4-Stroke 24-Valve Dual-Overhead Camshaft The third engine presented in detail is a new generation vee 6-cylinder 4- stroke 24-valve dual-overhead camshaft (DOHC) engine. Because of the precise environmental control requirements for exhaust emissions, it is not possible to repair this engine by traditional means. The manufacturing tolerances require selective matching of pistons to cylinder bores, which is not possible with hand measurement. Therefore, the repair of these new generation engines is by replacement units such as a short motor instead of the traditional rebore and new pistons. All repair and adjustment of these engines must be carried out exactly as they are listed in the vehicle manufacturer's workshop manuals.

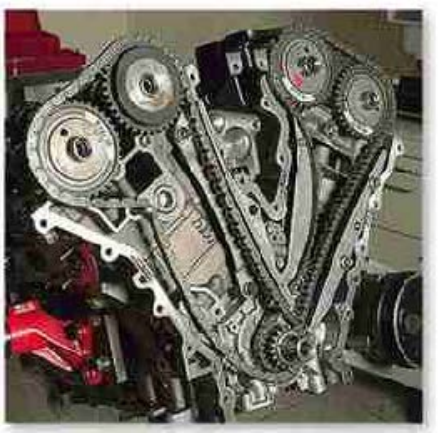
DOHC

Cylinder Arrangement Many design variations for engines are used or have been used. The main areas are the configuration of engine cylinders in number and position, crankshaft construction and firing orders, combustion chamber types for gasoline and diesel fuels, cylinder block and crankcase constructions, OHV and OHC layouts, engine location, and the methods of securing and mounting the engine in the vehicle frame. There are also two-stroke gasoline and diesel engines and rotary gasoline engines with their own particular operating cycles. Details of these are explained later in this section.

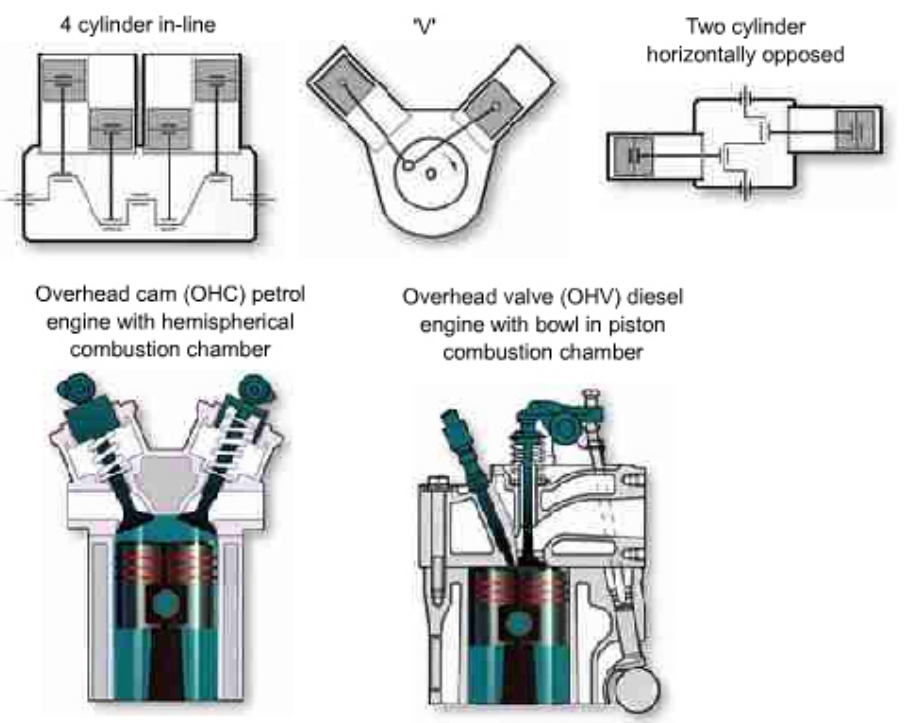

Technical Details of 4-Cylinder 4-Stroke OHC Gasoline Engine This diagram shows the components of this engine type. Look closely at the names and detail of these components before moving on to the next screens where they are shown individually with information on their purpose and construction detail.

Cylinder Block and Crankcase When made as a single piece these parts can be called the engine block. The engine block is the main component of the short motor. On this engine it is a cast iron component, but a lighter type made from an aluminum alloy with cast iron or steel alloy liners can be used.

Engine block

Cylinder Bores The cylinder bores are cut with a boring bar to give circular and parallel walls. Cast iron is a mixture of iron and a small amount of carbon (2.5 percent to 4.5 percent of the total).

Cast Iron The carbon gives a crystalline structure to the cast iron that is strong in compression and slightly porous so that lubricating oil remains in and on the surface. This surface porosity makes cast iron particularly suitable for cylinder bores, which can be machined directly into the casting.

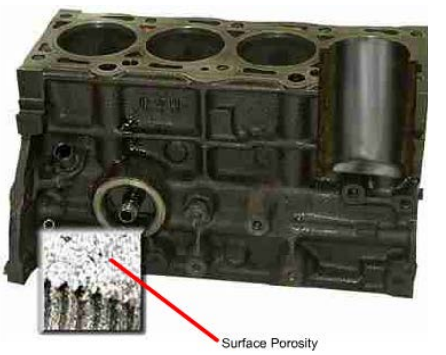

Cast iron block

Crankcase The crankcase is an integral part of this block and has been machined in line for positioning and securing the five main bearings of the crankshaft. The main bearings are split into two halves, with each half fitting either into the block or into the bearing cap. The bearing caps were secured to the block before machining and must be refitted exactly in the position from which they are removed. Accurate fitting of the caps is made by solid or hollow dowels. The securing bolts are of a unique design and make of high tensile steel. Replacements must be to the original specification.

Main bearing bolts

Water Jacket Inside the block between the cylinder walls and the outside of the casing is a water jacket. During the casting process, a sand former is used to create the internal shape of the water jacket. When the cast has cooled the sand is removed through holes on each side of the block. These are sealed with core plugs when the engine is built.

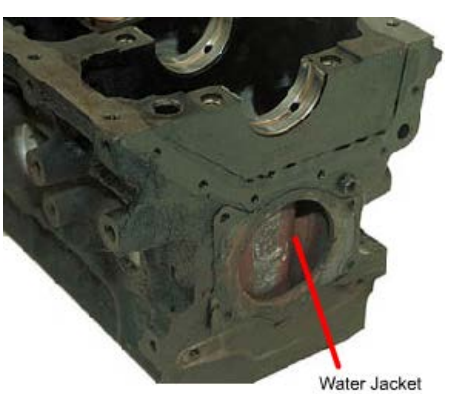

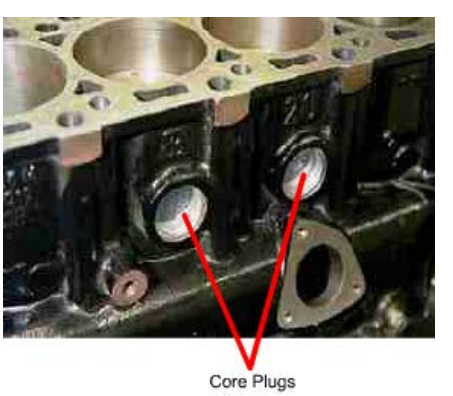

Oilways Oilways drilled through the block include the main oil gallery carrying oil under pressure along the length of the engine, which connects with drillings to the main bearings and the camshaft bearings in the cylinder head. Other drillings connect to the inlet from the oil pump and pressure relief valve. The block is machined, drilled, and threaded to accept the oil pump, oil pan, engine mountings, ancillary components, and the cylinder head.

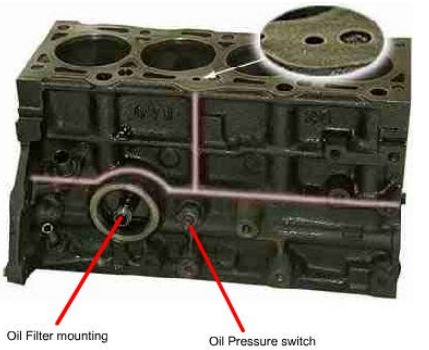

Pistons The pistons are manufactured from an aluminum silicon alloy to keep the weight to a minimum. Various designs are used to suit individual engine types and to accommodate thermal expansion.

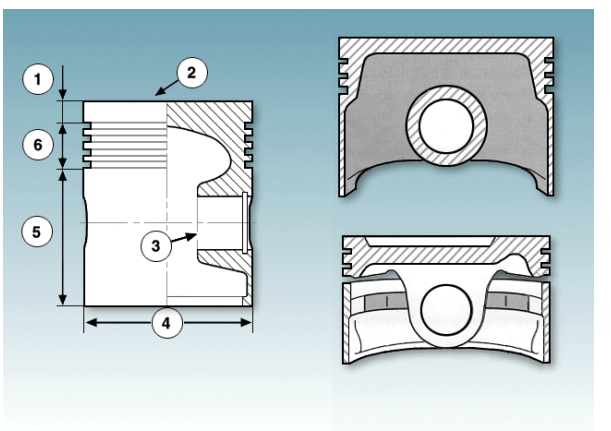

Piston details

Thermal Expansion Aluminum has a higher coefficient of thermal expansion than the cast iron used for the cylinder block. This means that the piston expands more than the block as the engine warms up. When the engine is cold the piston does not make a good fit. A number of detail design features are used on pistons to accommodate thermal expansion. A cold piston is slightly oval and tapered so that the skirt has a larger diameter than the crown.

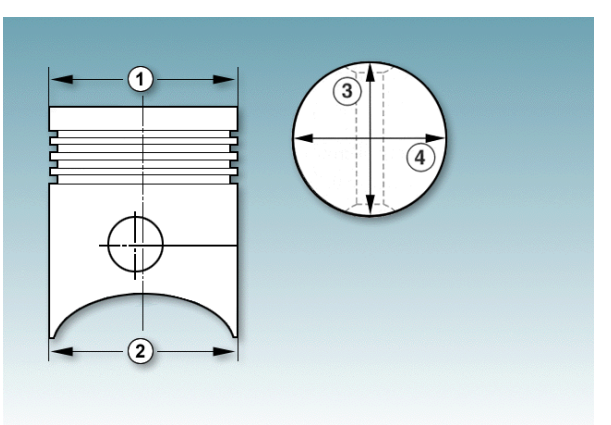

Expansion of a piston

Piston Pin The piston pin is offset a small amount toward the thrust face so that the forces applied to the piston crown hold the side of the piston against the cylinder wall. This design detail produces a quieter engine, particularly when cold. From a practical point of view, it means the piston must be fitted the right way round, and manufacturers' marks indicating the front must be observed.

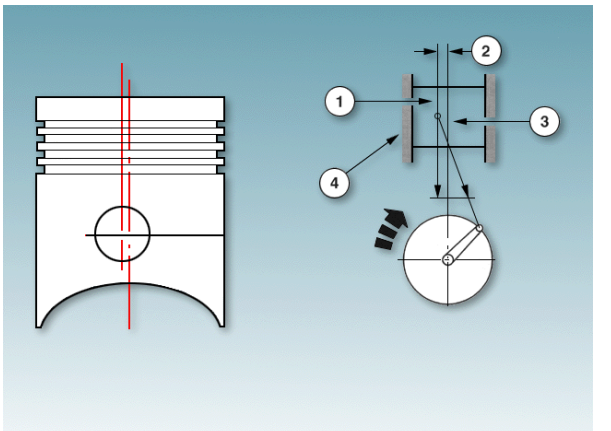

Piston pin (or gudgeon pin)

Piston and Piston Rings Toward the top of the piston, annular grooves are cut to accommodate the piston rings. The top two, or, in some cases, three piston rings are compression rings and complete the gas-tight sealing between the piston and cylinder wall. The lower ring is the oil control or scraper ring that removes most of the oil from the cylinder walls, allowing a small amount to pass in order to lubricate the piston and rings above. The oil-control ring groove is slotted behind the ring so that oil can pass inside the piston and return to the oil sump.

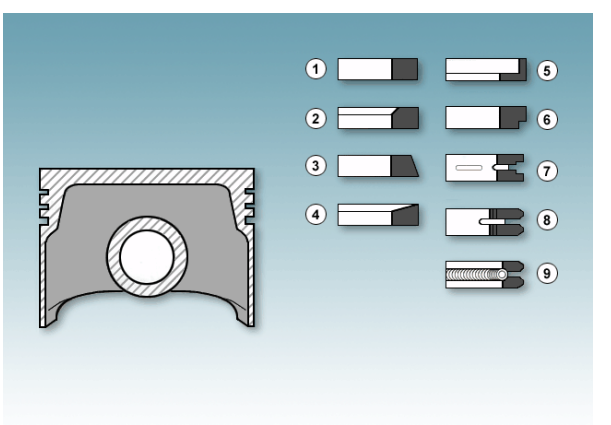

Details of piston rings

Piston Pin Bore Machined through the piston in line with the axis of the cylinder block is the piston pin or gudgeon pin bore. The detail inside the piston pin bore depends on the type of fit of the piston pin, which can be either an interference fit in the connecting rod or a push fit in both the piston and connecting rod little end. When the piston pin is held in the connecting rod, a smooth bore is machined in the piston. A small bore is used when the piston pin is held in the connecting rod. Snap-ring/circlip grooves are cut into the ends of the bore when a push-fit piston pin is used.

Pin bore

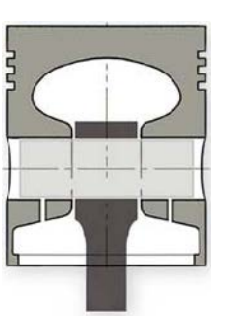
Cross section of the piston

Pin in place

Piston Crown The piston crown forms a part of the combustion chamber. The constructional detail found on the piston crown can be varied with one common type having sections cut away to provide clearance for the valves. Others are concave or domed and in some instances can be complex in order to create the air swirl and fuel-mixing conditions needed for efficient and clean combustion.

Various pistons

Piston Rings The piston rings have two tasks: the top rings are compression rings and retain the combustion pressure and the lower ring is the oil-control ring. The combustion pressure acts on the back of the compression rings and keeps them in close contact with the cylinder walls.

Compression and oil control rings

Compression Rings The compression piston rings are made from cast iron and treated with a surface coating to aid running so that they quickly match the cylinder bore and make a gas-tight seal. It is important that the surface coating is not damaged during fitting. A number of different cross-sectional designs are used for both the top and second rings.

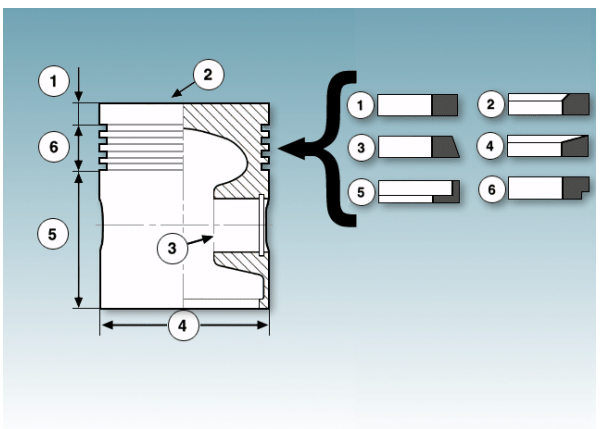

Compression ring features

Oil Control Rings Two types of oil-control rings are commonly used. One is a cast-iron ring with a groove and slots around the periphery cut. This allows oil flowing back through the piston to drain to the oil pan or sump. The other is a three-piece ring consisting of two identical thin alloy steel rings with an expander in between.

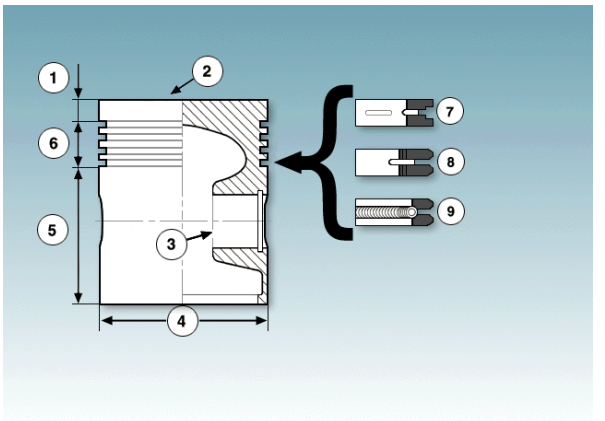

Oil ring features

Piston Pin (Gudgeon Pin) The piston pin or gudgeon pin is a hollow steel pin joining the piston to the connecting rod. The connecting rod little end can be attached to the piston pin by two methods. One method uses a push fit or clearance fit of the pin into a shell bearing or bush pressed into the little end boss. This method uses a push or interference fit of the pin into the piston.

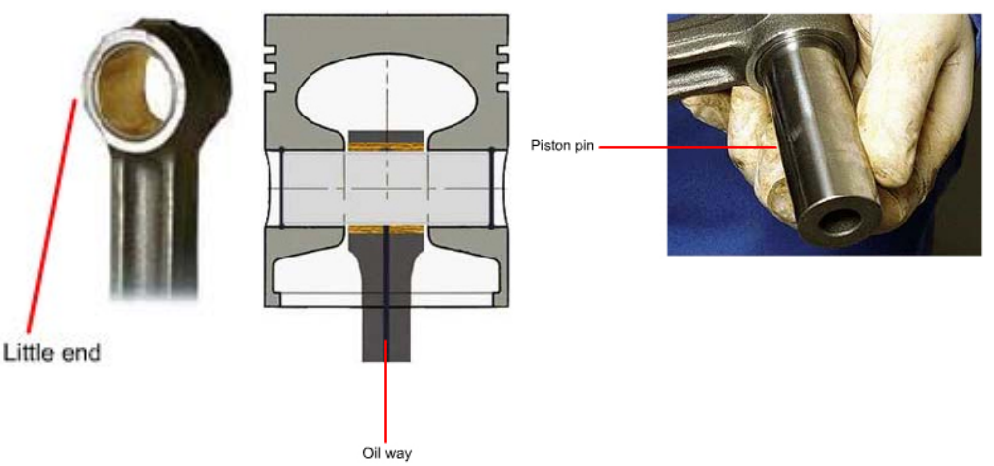

Interference Fit The other method uses an interference fit of the pin into the little end. This is obtained by shrinkage or clamping of the connecting rod boss. With this method, the piston pin bore in the piston acts as the bearing, and drillings into the bores allow lubricating oil to enter.

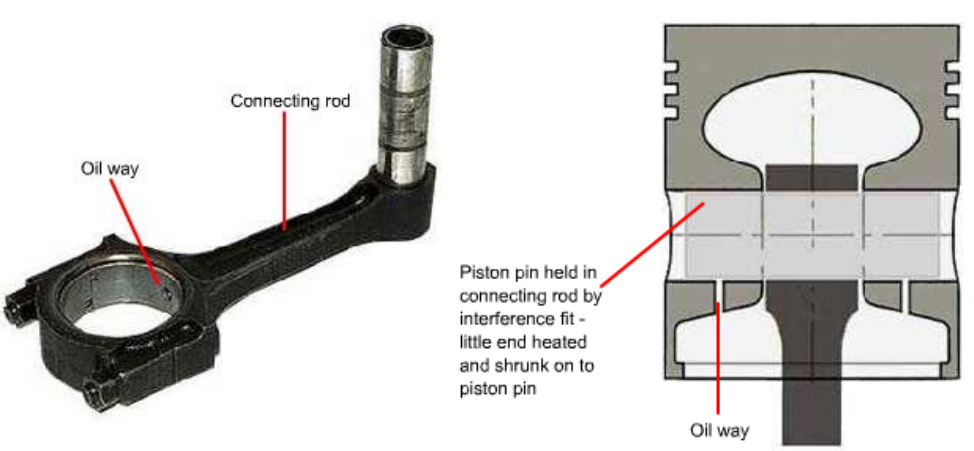

Connecting Rod The connecting rod transfers force and movement from the piston to the crankshaft. It is manufactured from heat-treated medium carbon steel by drop forging. This is a forging process that progressively forms the shape of the rod through the use of a series of dies.

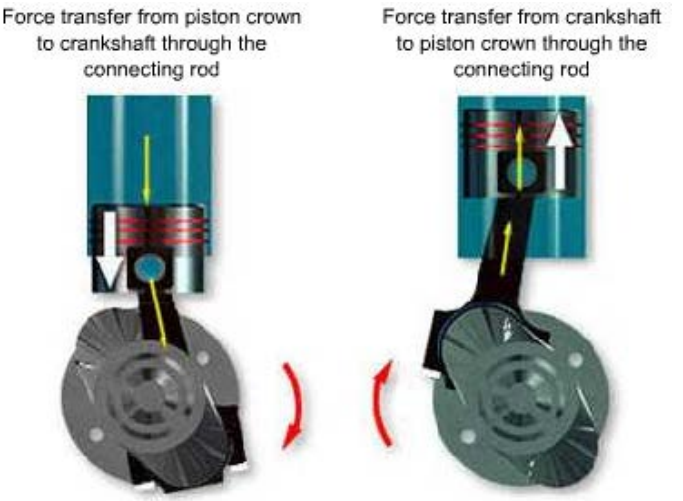

Connecting Rod The connecting rod has an 'I' section, which makes it resistance to bending. The finished product is tough and able to withstand the compressive and tensile forces applied during the compression, power, and induction strokes. At the little end, an interference fit bore is machined for the piston pin and/or a phosphor-bronze bush. When a bush or bearing is used it is pressed into the little end bore, and, in the case of bushes, reamed accurately to size.

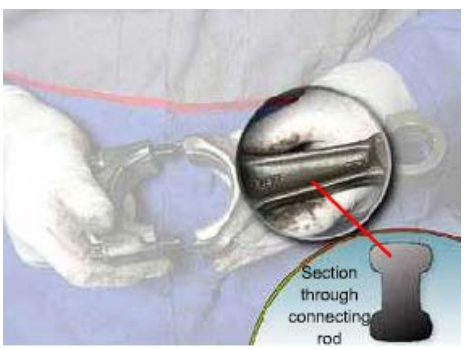

Big-End Bearing The big end is a split bearing mounting consisting of a forged fork in the rod and a matching cap. These are held together with studs or through bolts and nuts or with bolts threaded into the rod.

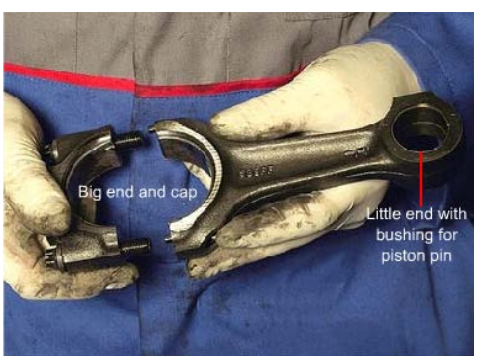

Matching Connecting Rod and Bearing Cap Identification Mark During the manufacturing process, the rod and cap are attached and machined together. These are usually marked when being manufactured and make a pair that can only be used together. They must be fitted the same way as when they were machined.

Cylinder Wall Lubrication Oil drillings through the connecting rod provide spray lubrication of the cylinder walls, and, in some instances, a drilling running the length of the rod gives a spray of oil to the underside of the piston to provide cooling.

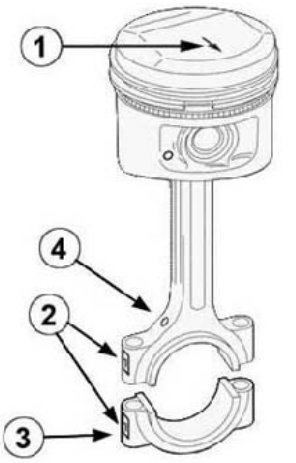

Piston and con rod features

Crankshaft The crankshaft converts the linear movement of the pistons into the rotary movement needed to drive the vehicle. The crankshaft is manufactured from a steel alloy or cast iron by hot stamping, forging or by a casting process.

Crankshaft The crankshaft converts the linear movement of the pistons into the rotary movement needed to drive the vehicle. The crankshaft is manufactured from a steel alloy or cast iron by hot stamping, forging or by a casting process.

Engine crankshaft

Bearing Journals The no. 1 big-end bearing journal is fitted between the webs radiating from the main journals. Balancing weights are formed as extensions of the crankshaft webs. The pattern of a main bearing, followed by a big end bearing, continues to the rear main journal. On one of the main bearings (in this case the center bearing), a thrust bearing is fitted in order to accommodate the axial movement of the crankshaft.

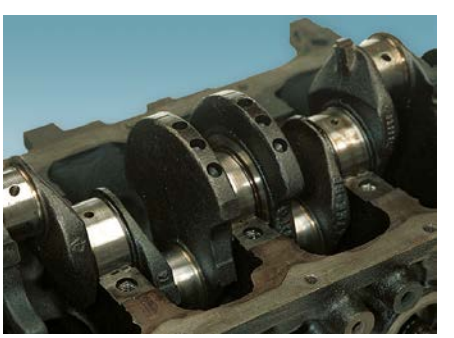

Journals

Rear Main Oil Seal Behind the rear main journal is a machined face that forms the seal land for the rear main oil seal that is fitted onto the cylinder block. The flange at the end of the crankshaft is drilled and threaded to locate and secure the flywheel. The big end journals are paired at 180° and the firing order is 1-3-4-2.

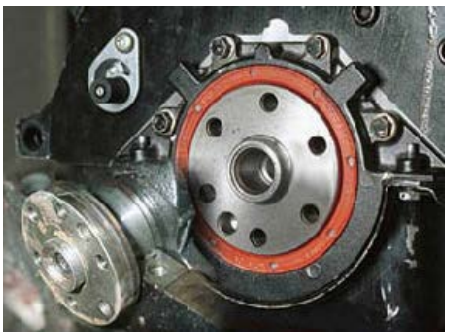
Radial lip oil seal

Crankshaft Bearings The crankshaft bearings are steel-backed split-ring types with an alloy-bearing surface. Different alloys and support coatings are used. Correct selection of replacement bearings must be to the engine manufacturer's specifications.

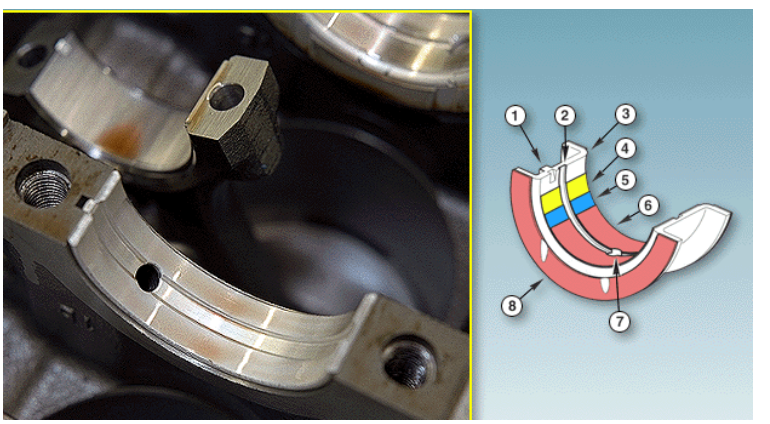

Details of the bearing

Bearing Nip The bearing halves are perfectly round when fitted but spread when released. During fitting the shell bearing halves are 'nipped' so that they are gripped in the bearing housing when the cap bolts are tightened. To prevent rotation and to ensure positive location, a lug on the bearing fits into a slot on the edge of the bearing half bores. Oil slots and holes are machined through or on the bearings in order to distribute lubricating oil both for the bearings and for passage to other parts of the engine. A pair of shell bearings often includes one with oil drillings. This one with a drilling will align with the oil drillings in the block or connecting rod, and the other will fit into the bearing cap.

Bearings

Signs of 'nip'

Thrust Bearings on Crankshaft to Control Axial Movement
To limit the axial movement of the crankshaft, thrust bearings are fitted to one of the main bearings. These are either two separate semicircular rings or are made as part of one of the main bearing shells.

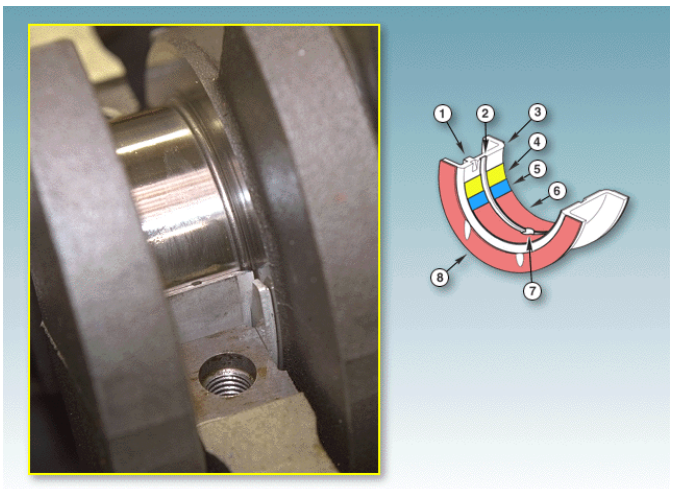

Details of the bearing

Cylinder Head Gasket This is a special gasket, and a number of different types are used. The gasket has to provide a gas-tight seal between the cylinder block and the cylinder head. It has to seal the water jacket and oil drillings and return passages. In many designs, it also has to make a thermal barrier to control heat dissipation and engine cooling characteristics. Cylinder head gaskets used to be constructed from a copper sandwich with an asbestos center. Because of environmental and health concerns, asbestos can no longer be used so new gasket construction and materials have been developed. Most new head gaskets are made from a composite compressible and heat-sealing material. These have a carrier sheet faced with a soft material. A few use a stainless steel pressed gasket that gives good sealing properties but no thermal insulation. Heat control is achieved by coolant jacket design.

Gaskets

Head Gaskets Like most other gaskets, head gaskets are not reusable. Good sealing by the head gasket requires the use of the correct tightening sequence and torques. Cylinder head bolts may be conventional and reusable or torque to yield and replaced after removal. Torque-to-yield bolts are tightened with the use of an angular gauge.

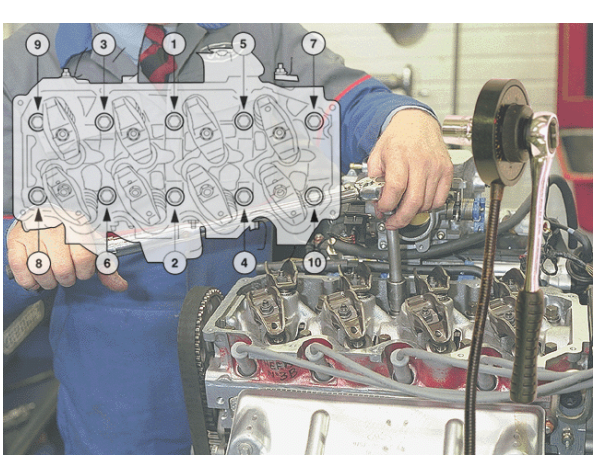

Tightening sequence

The Cylinder Head The cylinder head is a cast component. It can be manufactured from cast iron or from an aluminum alloy in order to reduce weight. The difference between these two materials requires different construction techniques. Cast-iron cylinder heads have the valve guides and valve seats cut directly into the parent metal. This is not possible with aluminum alloy and cast iron or steel valve guides are pressed into drillings in the head. Valve seat inserts are either pressed into the head or positioned in the mould before casting so that they are able to withstand high combustion temperatures.

Aluminum head

Valve seats

Combustion Chamber The combustion chambers are formed in the under side of the head and sit directly over each cylinder. The many designs used reflect manufacturers' preferences in meeting fuel economy, power, and exhaust emission regulations.

Inside the combustion chamber

Compound Valve Hemispherical This engine is using a compound valve hemispherical design that has two valves per cylinder positioned for cross-flow operation. The valves are inclined away from the vertical and match the curve of the hemispherical design. The ports are cast into the head with the inlets opposite the exhausts. A threaded drilling is used for the spark. This machined on the outside of the engine to give a gas-tight seal. This seal is either a flat compressible washer or a conical seat that does not use a gasket.

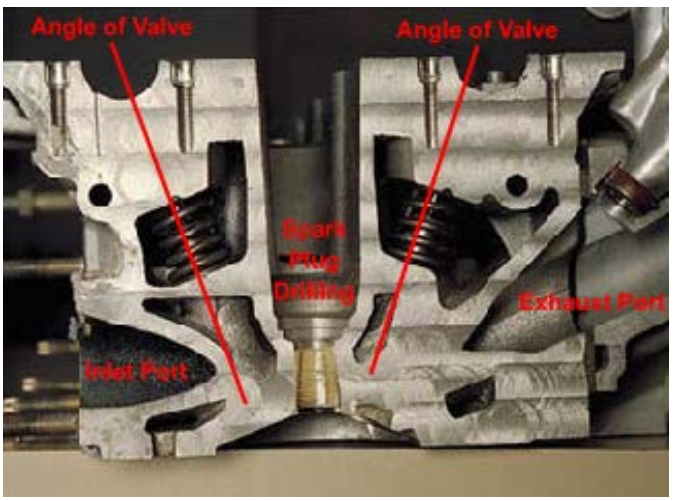

Coolant Passages Around the combustion chambers are coolant passages that connect to the water jacket in the block and to the outlets to the radiator and the in-car heater. The water jacket casting holes are sealed with core plugs in a similar way to those in the engine block. On top of the cylinder head a series of bearings are positioned in-line to hold the camshaft and valve operating mechanism. Oil drillings feed lubricating oil to the camshaft bearings, cams, hydraulic tappets, valve rockers, and the valves.

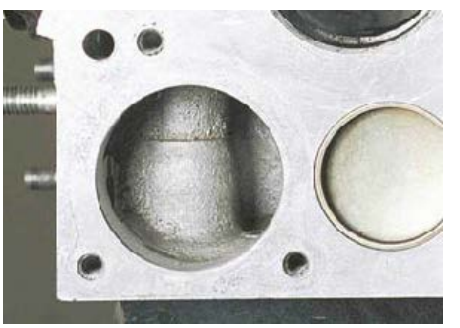
Engine coolant passages

Camshaft The camshaft is carried by ring bearings pressed into the cylinder head and bored in-line. The camshaft is made from cast iron or forged steel and is machined with bearing journals and oval cams for each valve. The cams are positioned to provide valve timing in sequence with the four-stroke cycle and have to be timed to the crankshaft. To do this a woodruff key locates the drive gear secured to the front of the camshaft. The gear is twice the diameter of the crankshaft gear and rotates at half the crankshaft speed. It is marked for rotational position and aligned with a corresponding mark on the crankshaft gear before the drive belt is fitted.

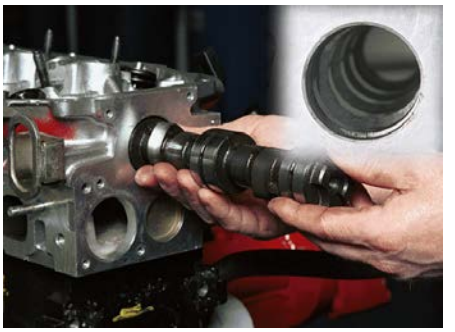

Fitting the cam

Cam Shapes The cam profiles consist of a base circle and lobe for opening and allowing closure of the valve. The cam profile may be symmetrical but more often an asymmetrical profile is used. These have a flat leading face that opens the valve slowly and holds it wide open longer and a steep trailing face to close the valve rapidly.

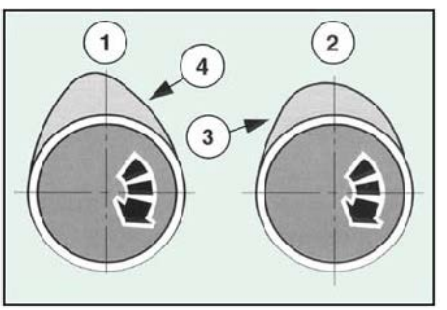

Cam profiles

Valve Operating Mechanisms Many methods are used to transmit the lifting movement of a cam to a valve. This engine uses individual, stud-mounted, pressed-steel rockers for each of the inlet and exhaust valves.

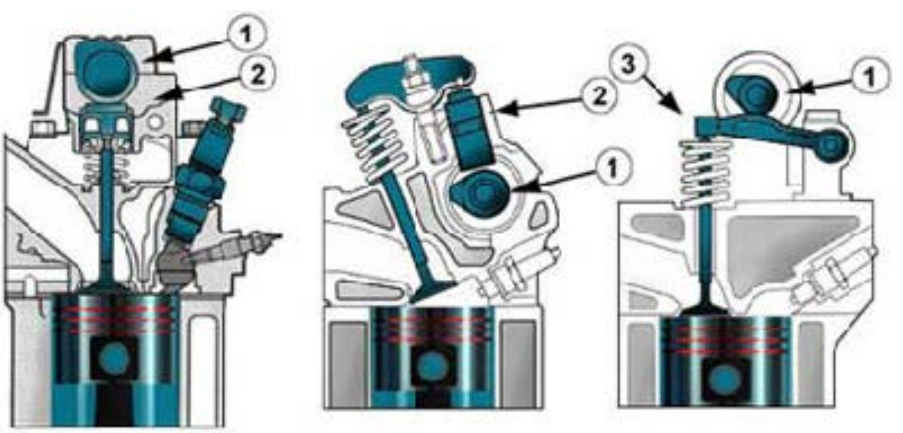

Different mechanisms

Inlet and Exhaust Valves These are poppet valves carried in guides that give accurate centralization to the valve seats where they separate the combustion chamber from the ports. The valve face temperatures can be as high as 500°C for the inlet valve and 800°C for the exhaust. The inlet valve is cooled by the incoming air charge. The heat is conducted to the valve stem and dissipated through the valve guides to the cylinder head. The high temperatures cause lacquer and carbon deposits to form on the valves, which in time reduces the effective size of the ports and interferes with gas flow into the combustion chamber. Good quality fuel and engine oils resist the formation of these deposits. The removal of these deposits is required at high mileage intervals.

Valves in position

Inlet Valve The inlet valve is larger than the exhaust valve. The reason is that the pressure difference on the inlet stroke is atmospheric pressure over engine vacuum, and a large valve is needed to keep from restricting the airflow. On the exhaust stroke, residual combustion-chamber pressure is very much higher than atmospheric pressure and a smaller valve can be used.

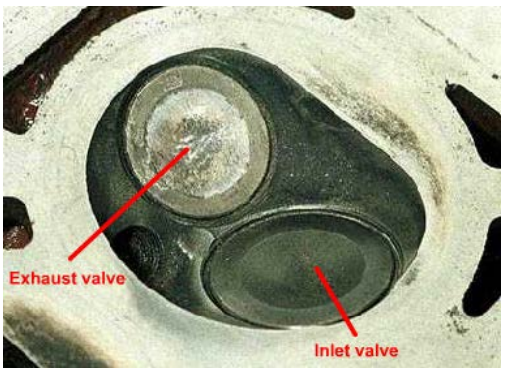

Valve Seat Angles To obtain a good seal, valve seats are cut at an angle of 45° and valves at an interference angle, which is slightly less (0.5° to 1°). On some old engines, valve seat angles of 30º have been used. The valves are opened by lift from the cam and closed by coil springs. The springs are fitted between the cylinder head and a retainer held in place on the valve stem by split collets. The valve stem head and rocker are machined and positioned in order to encourage rotation. This helps to maintain the condition of the valve head and the valve seat.

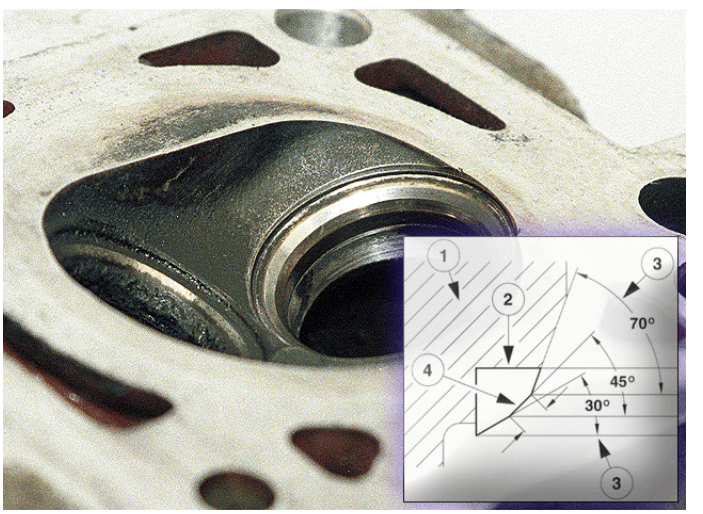

Angles of the valve seats

Camshaft Drive Belt (Timing Belt) On many modern engines, the camshaft is driven by a toothed belt. The belt is manufactured from a synthetic rubber and fiber compound and has teeth molded on the inside that match the teeth of the crankshaft and camshaft gears.

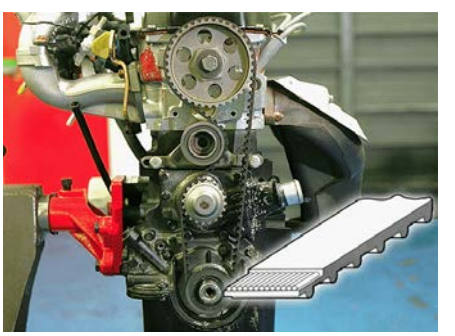
Drive belt

Belts and Pulleys Belt and pulley teeth profiles are either trapezoidal or rounded. They are not interchangeable, and the correct belt and pulley match must be made when changing components.

cam belt teeth

Belt Tension The tension of the belt is important for a trouble-free life. A small variation from the specified tension can cause premature failure. Tensioners are fitted so that initial and in-service adjustment of the belt can be made. Manufacturers' directions and specifications must be observed.

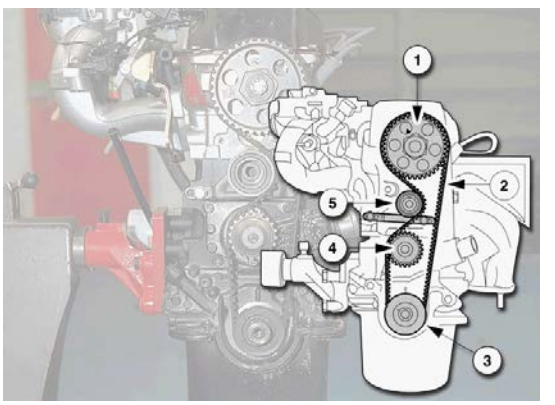

Belt drive components

Direction of Rotation Before removing a drive belt, mark the direction of rotation on the belt and always refit so that the original direction is restored.

Belts are usually unidirectional

Covers, Cases and Sumps After the engine has been assembled, a number of covers are used to seal the engine from oil loss, and the oil pan is fitted to hold the lubricating oil.

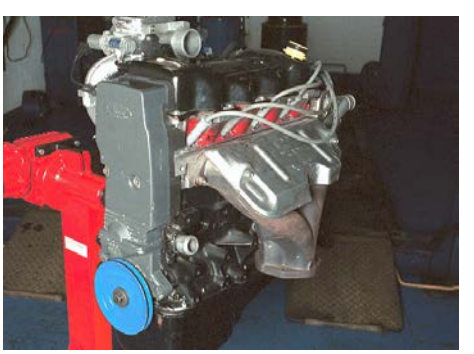
Final assembly stages…Cam cover

Rocker Cover The cam or rocker cover on top of the engine often includes the oil filler cap and part of the positive crankcase ventilation system.

Cam cover Seals

Crankshaft Seals The front of the engine has a casing holding the crankshaft oil seal and a protective cover for the crankshaft drive belt. The rear crankshaft seal is fitted to a casing that is located by dowels for centralization and bolted to the back of the engine.

Seals Sump or oil pan

Sump The sump is fitted with baffles to prevent oil surge and keep oil around the pick-up pipe from the oil pump.

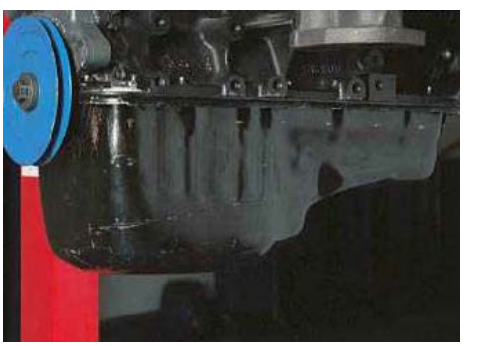

Sump or oil pan

Auxiliary Components Also attached to or in the engine are components of the lubricating, cooling, ignition, air supply and exhaust, fuel, and starting and charging systems. These are covered in the respective learning programs.

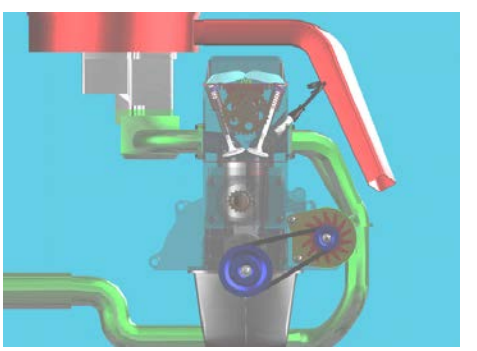

Other parts…

State an ideal material, with reasons, for:

An engine block

A piston

A crankshaft

A piston ring

A big end bearing

Read the previous section again and note down some key bullet points here:

-
-
-
-
-

Engine Layouts

Engine Locations Vehicle layouts of engine, transmission, and driveline can have the engine located at the front, in the middle or at the rear of the vehicle. Engines are fitted either along the axis of the vehicle or across. These are known as in-line or transverse.

Positions for the engine

Engine Mounting in the Vehicle Frame Engine mountings have to support the weight of the engine, accommodate the torque reaction when under power and insulate the vehicle and occupants from the engine's vibrations. The majority of engine mountings consist of two steel plates with a rubber insert between. The rubber is bonded to the steel plates, which have locating dowels or lugs and studs to secure the engine to the frame. Brackets on the engine and frame are separated by the rubber mountings.

Engine...

Mountings

Front Engine, Rear-Wheel-Drive Mountings Front engine, rear-wheel-drive mounting locations are mainly at the center of the engine and on each side roughly at the center of gravity of the engine. The engine is supported between two mountings acting with both compression and shear forces. The rear of the engine is bolted to the transmission and this is mounted toward the rear with a single central or a pair of similar rubber mountings. This is the most common system, although others have been used.

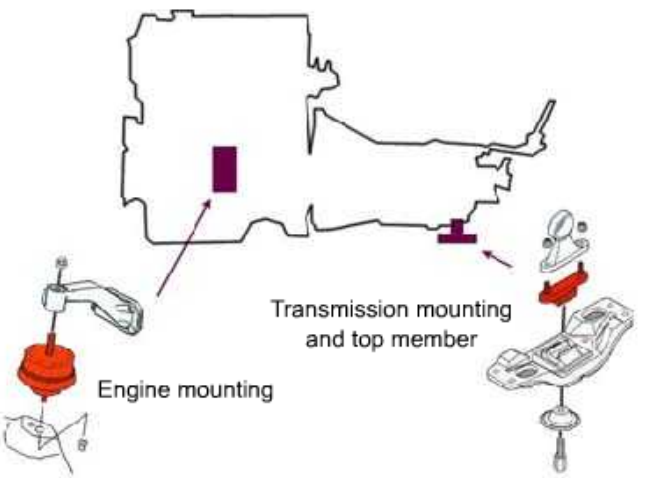

Front Transverse Engine, Front-Drive Mountings Front transverse engine, front-wheel-drive mountings include location, support and security for the engine and transmission. The torque reaction from the driven wheels and drive is applied to the engine and transmission assembly with this layout. The system of mountings includes low-level support and high-level torque reaction mountings or high-level support and low-level torque reaction mountings.

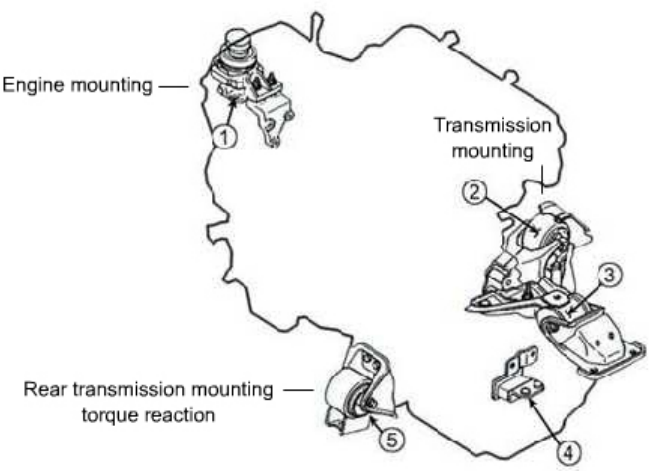

Hydraulic Mountings Many luxury cars and newer diesel vehicles are being fitted with hydraulic mountings that cushion the vibrations and transmit less noise so that passenger comfort is improved.

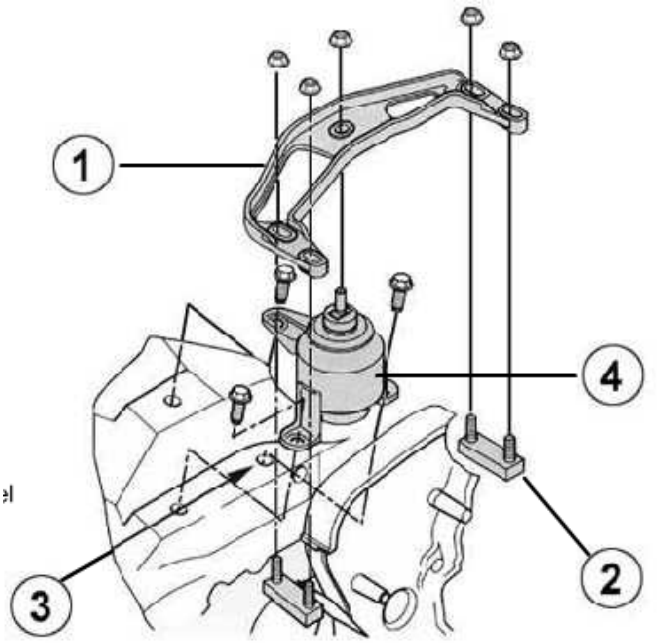

This mounting improves comfort

Two-Stroke Gasoline Engine Cycle All internal-combustion engines have to have air and fuel induction, compression, combustion and exhaust. These are all separate strokes in the four-stroke cycle. Unlike the four-stroke engine, which fires on alternate revolutions, a two-stroke engine fires on every revolution of the engine and must combine the necessary conditions into the two strokes. Naturally aspirated two-stroke engines are possible with gasoline as a fuel, but not with diesel. In order to combine the four conditions into two strokes, the crankcase is used for induction, partial compression and transfer of the air charge to the cylinder above the piston. Upstroke – piston moves away from the crankshaft On the upstroke of the piston, air and fuel are compressed and ignited with a spark. Below the piston, the intake of new air and fuel charge is taking place. The crankcase volume increases as the piston moves away from the crankshaft, and this reduces the pressure allowing atmospheric pressure to push in the new air charge.

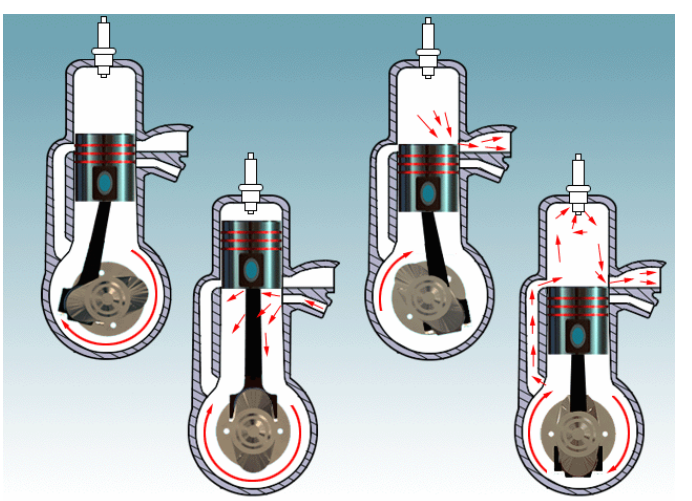
Two-stroke cycle

Down stroke – Piston Moves toward the Crankshaft The combustion of fuel produces expansion of the gases and a force on the piston crown to power the engine. The piston moves down toward the crankshaft and uncovers a port in the cylinder wall. This is the exhaust port, and the exhaust gases escape into the atmosphere through the exhaust system. On the opposite side of the cylinder, another port is uncovered. This is the transfer port connecting the crankcase to the cylinder. A deflector on the piston crown directs air away from the exhaust port, although some is used to scavenge the cylinder. Lubrication of small versions of these engines is by a total loss system that mixes lubricating oil into the air and fuel charge. The oil can be premixed in a gasoline form or can be injected into the air stream entering through the inlet port. Larger engines use a dry sump system.

Development These engines should theoretically be more efficient and more powerful than similar-sized four-stroke engines, but this is rarely the case as the breathing and volumetric efficiency is less effective. Valves in the inlet port are usually used to gain some improvement. Many manufacturers continue to investigate and develop forms of two-stroke engines as a more efficient alternative to the four-stroke engine.

Two-Stroke Diesel Engine Cycle Two-stroke diesel engines are used in many commercial vehicles and buses. The same four conditions of air induction and fuel injection, compression, combustion, and exhaust that occur in the four-stroke cycle have to be present during the two strokes of the two-stroke cycle. Diesel engines require a completely filled cylinder of air in order that the temperature rise with compression reaches the level required for spontaneous ignition of the diesel fuel. The air supply is boosted with a supercharger driven from the engine crankshaft. The airflow from the supercharger passes into the cylinders through ports at the bottom of the cylinder. The exhaust gases leave the cylinders through cam-operated poppet valves in the combustion chambers. The incoming air pushes the residual exhaust gases out through the exhaust valves to give good scavenging.

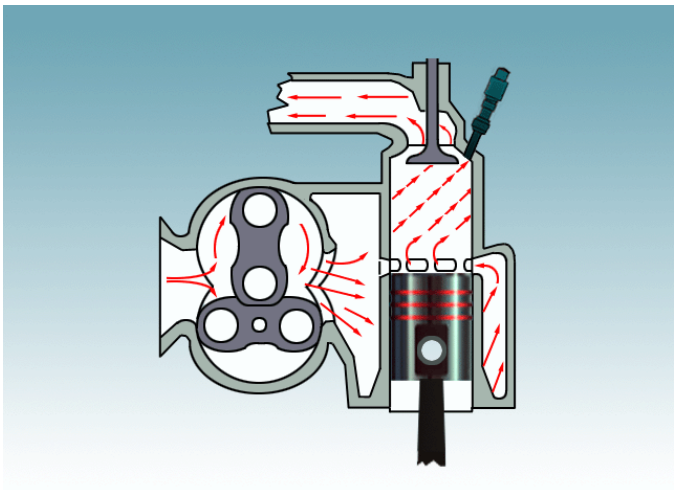

Inlet ports open and…

Down stroke The two strokes of the diesel cycle are shown in these diagrams. Down stroke – piston moves toward the crankshaft This is the combustion and power stroke. The exhaust valves open at approximately 120° of crankshaft revolution and the exhaust residual pressure starts the exhaust sequence. The inlet ports are uncovered by piston travel at approximately 140° and the boosted air supply enters the cylinder for scavenging. When the exhaust valves close a new air charge fills the cylinder.

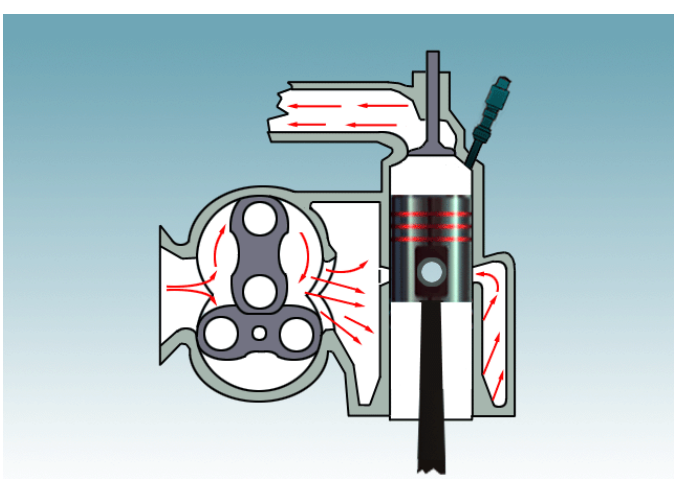

Closed

Upstroke Upstroke – piston moves away from the crankshaft. At approximately 220° of crankshaft revolution, the inlet port is covered and the upward movement of the piston compresses the air in the cylinder. At a few degrees before top dead center (tdc), the fuel is injected directly into the combustion chamber and is ignited by the heat in the compressed air, which is at a temperature that causes spontaneous ignition of the fuel.

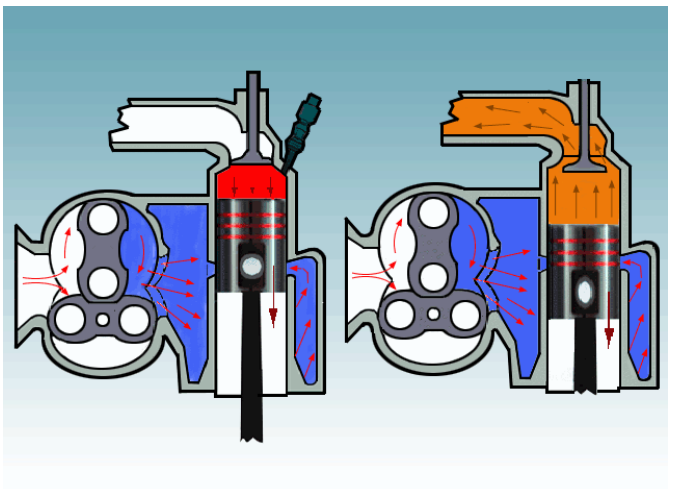

Diesel two-stroke cycle

Rotary or Wankel Engine This diagram shows a rotary engine of a type that has been used for motor vehicle applications. This engine has opening and closing chambers that form as the triangular rotor rotates on the crankshaft gear. The shape of the housing maintains the rotor tips in contact and rotor side face seals complete the gas-tight sealing. Induction and exhaust is through ports in the housing. Compression and combustion strokes occur away from the ports.

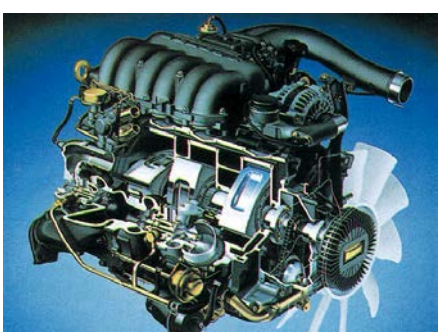

Rotary engine

Read the previous section again and note down some key bullet points here:

-
-
-
-
-

Engine Variations

Variations in Engine Design The following screens cover some of the many design variations that are or have been used for engines. The main areas are: the configuration of engine cylinder in number and position, crankshaft construction and firing orders, combustion chamber types for gasoline and diesel fuels, cylinder block and crankcase constructions, OHV and OHC layouts, engine location, and the methods of securing and mounting the engine to the vehicle frame. Two-stroke gasoline and diesel engines and rotary operating cycles for gasoline engines are also covered.

Engine Cylinder Configuration The basic engine consists of a single cylinder. This is used on small engines only. On a four-stroke engine, a single cylinder provides one combustion stroke for each two revolutions of the engine. This gives a pulsing or vibrating engine. It is not smooth and transmits the vibration to the vehicle and on to the passengers. Increasing engine capacity by increasing the size of a single cylinder does not give a corresponding increase in performance. Some cylinder capacities are more efficient than others. Multiple cylinder arrangements provide a smoother power output and greater efficiency by keeping cylinder capacities to the optimum.

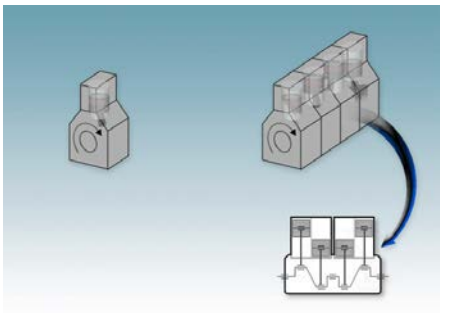

A single and four-cylinder engine

Twin-Cylinder Engines Twin-cylinder engines are built as in-line, horizontally-opposed or vee types. These engines have been used on automobiles and motorcycles. The in-line engines have been built with both pistons operating in parallel and on alternate strokes. Horizontally opposed pistons move out and return in opposed directions. Various vee configurations have been used.

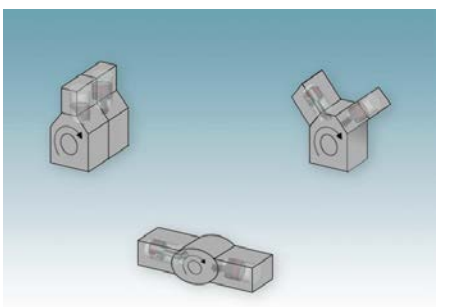

Twin-cylinders

Three-Cylinder Engines Three-cylinder in-line engines of up to 1 liter have been used by some manufacturers. A three-cylinder vee engine is a design being considered by some manufactures because of its compact shape.

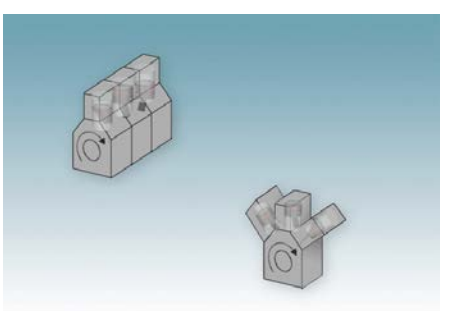

Three cylinders

Four-Cylinder Engines Four-cylinder in-line engines are the most common layout because of the reasonably smooth power output, inexpensive construction costs compared with further increasing the number of cylinders, and because they meet the optimum cylinder capacity for engines from 1 liter up to approximately 2.5 liters. These engine capacities are used in most countries of the world. Four-cylinder diesel engine capacities have a higher optimum cylinder capacity because they rotate less quickly. Other four-cylinder configurations are horizontally opposed vee engines. (The term ‘boxer’ is sometimes used to describe this layout, although this is rarely used today).

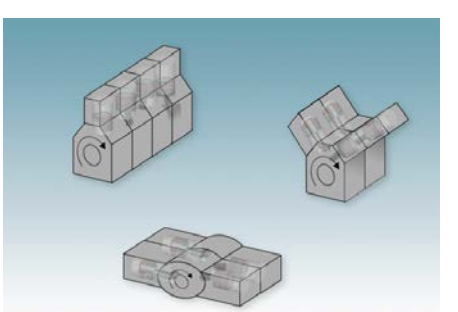

Four cylinders

Slant Engine A slant engine is a four-cylinder in-line engine mounted away from the vertical in order to lower the top of the engine and bonnet line.

Some engines lean over…

Five-Cylinder Engines Five-cylinder engines have been of in-line construction and limited to a few manufacturers. Recent developments have seen the introduction of a vee engine with two cylinders on one bank and three on the other. The advantage of a five-cylinder layout is a well-balanced and smooth power output. The vee engine reduces the length of the engine, making it suitable for transverse installation.

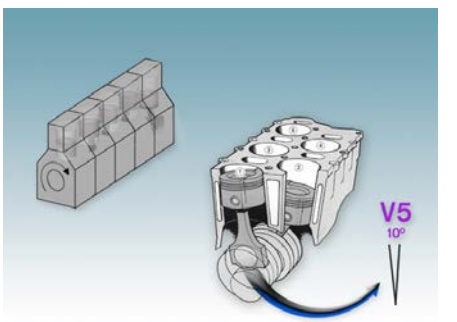

Five cylinders

Six-Cylinder Engines Six cylinders have been built with in-line, horizontally opposed and vee layouts. Six-cylinder construction costs are higher than the more common four-cylinder types, but the engine power output is much smoother and vibration lessened. Therefore, there are advantages for using six cylinders (when four would be more common) in order to produce a more comfortable and responsive engine. For larger capacity engines, six cylinders are needed to maintain the optimum cylinder capacity.

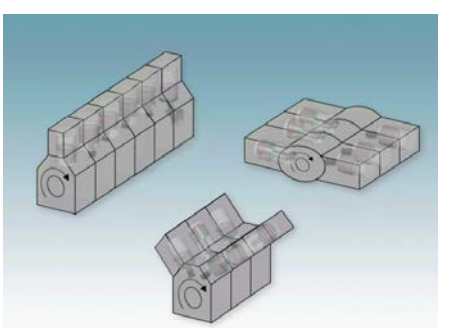

Six cylinders

Horizontally Opposed and 'V' Engines Horizontally opposed and vee engines are shorter than in-line engines, which makes them suitable for transverse or overhung installation. The cylinder banks of six-cylinder vee engines are built at an angle of 60°.

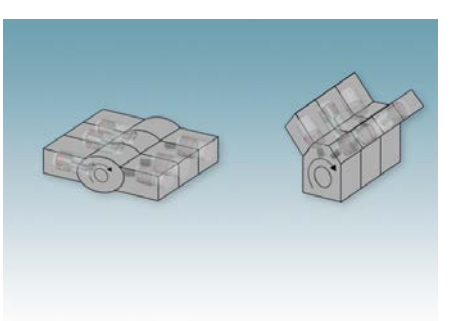

Flat and 'V' engines

Eight-, Ten- & Twelve-Cylinder Engines Eight-, 10-, 12- and higher-cylinder vee engines are manufactured. For larger vehicles, v-8 engines are common in most countries. Both gasoline and diesel engines use this layout with engine capacities upwards of three liters. The cylinder banks of 8-cylinder vee engines are built at an angle of 90°.

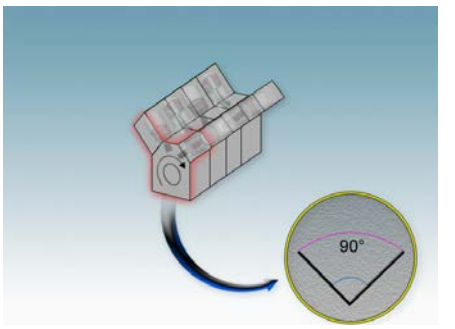

Multiple cylinders

Crankshaft Construction and Firing Orders For multi-cylinder engines, the firing order, the crankshaft big end journal positions and the direction of rotation are related. In-line four-cylinder crankshafts have cylinders numbered one and four and those number two and three paired, and at 180° apart. This gives the firing orders of 1-3-4-2 and 1-2-4-3 with alternate firing from each pair. In-line v-6 engine cylinder pairs are one and six, two and five and three and four. This gives the usual firing order of 1-5-3-6-2-4. The big end journals are positioned at 120° intervals on the crankshaft.

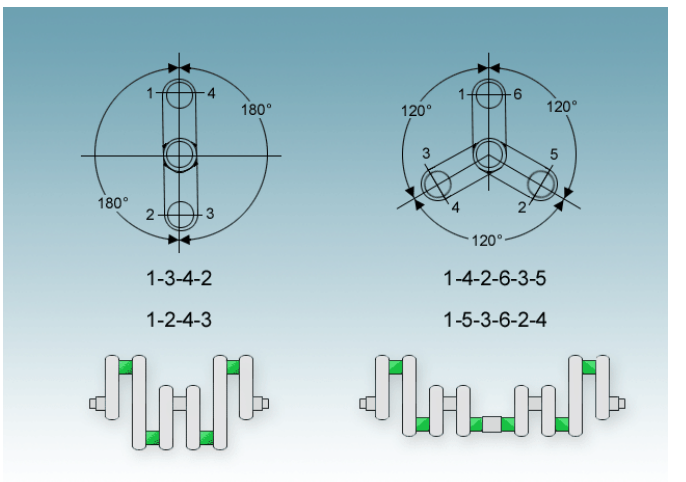

Firing orders

V6 Big-End Journals V-6 engine big-end journals carry two connecting rods each, with one from each bank of cylinders. The journals are positioned at 120° intervals and are either a single journal or splayed or offset journals with the two big-end crank pins offset in order to match the connecting rod angle to the journal.

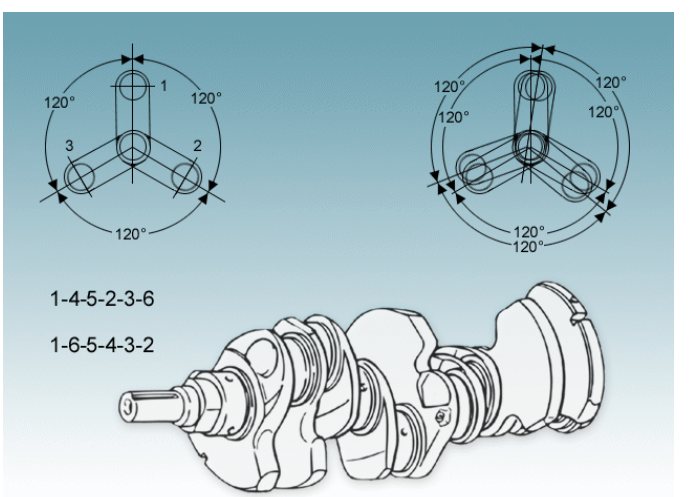

V6 crank

V6 Cylinder Numbering V-6 engines are numbered in two ways. One system numbers one bank with one, two and three and the other bank with four, five and six. The other numbering sequence uses alternate banks with one, three and five on one side and two, four and six on the other. Firing sequences are either one bank followed by the alternate bank or one cylinder from one bank followed by a cylinder from the other bank. These variations are shown in the accompanying diagrams.

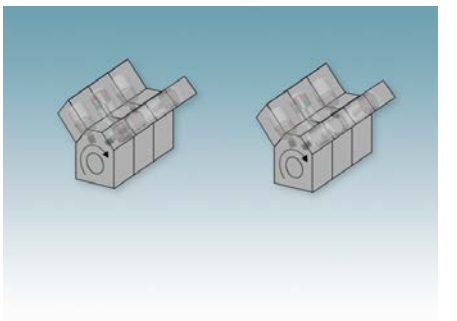

V6 engines

V8 Big-End Journals V-8 engines have four paired journals at 90° intervals. Each journal carries one connecting rod from each of the opposite banks.

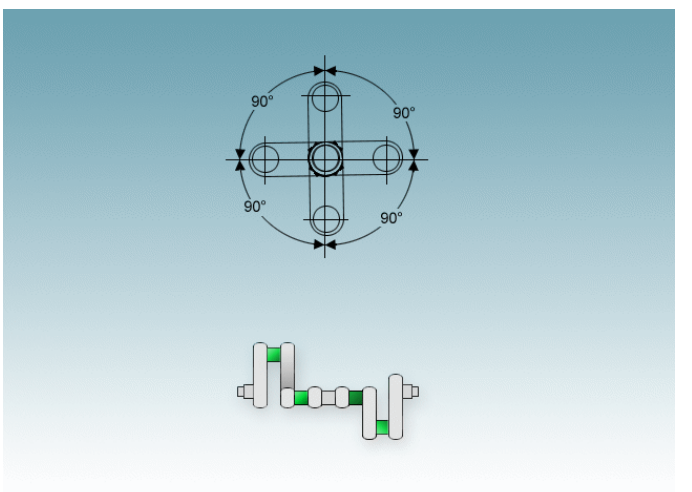

V8 crank

Cylinder Numbering Cylinders can be numbered in a similar fashion to the 6-cylinder engines, with either odd numbers on one side and even numbers the other or one to four on one side and five to eight on the other side.

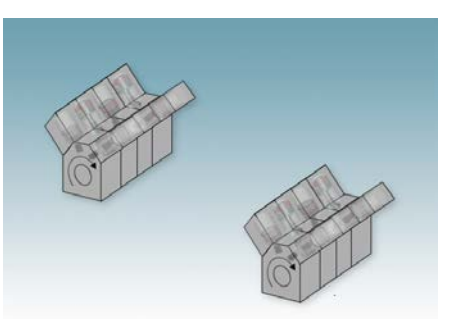

V engine cylinder numbers

Firing Orders Typical firing orders are shown in these diagrams.

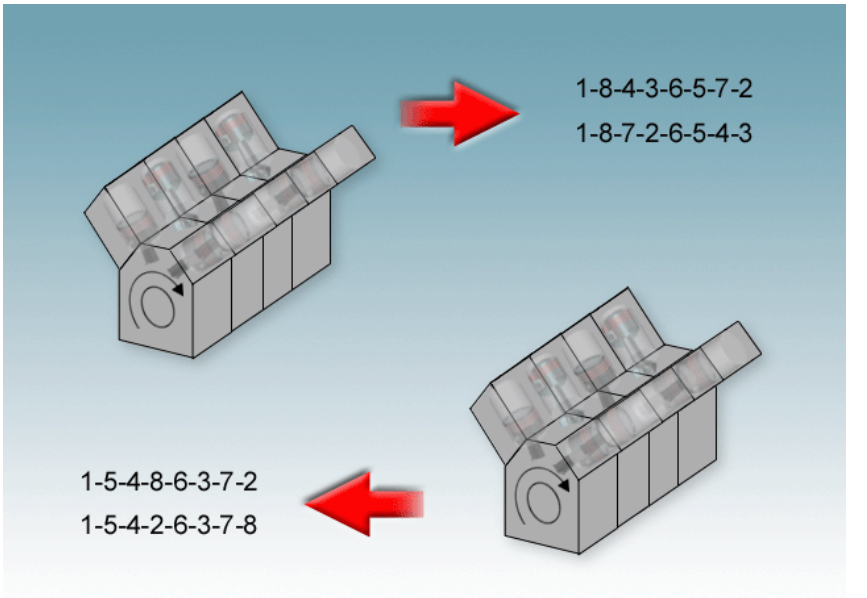

Typical firing orders

Combustion Chamber Designs The development pattern of gasoline engines can be seen in the changing design of combustion chambers.

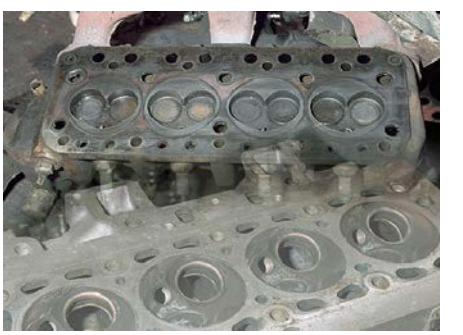

Combustion chamber development

Side Valve Construction Early engines of side-valve construction had the valves in the block and the combustion chamber covering the valves and part of the piston crown.

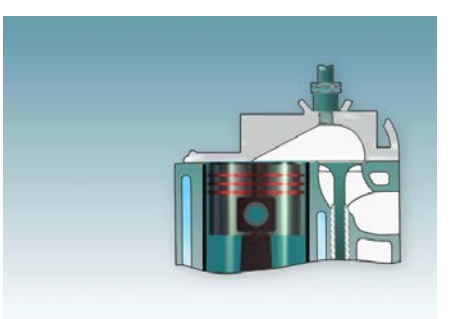

Side valve

Overhead Valve Engines These were followed by overhead valve engines with in-line valves and bathtub combustion chambers sitting over the piston.

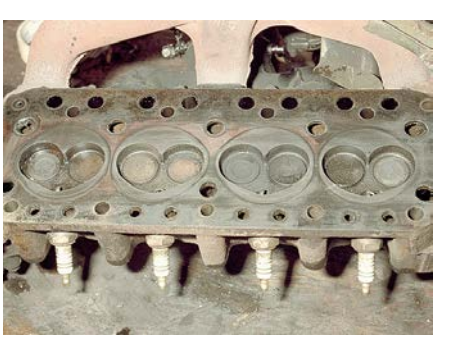

OHV head

Wedge-Shaped Chambers Improved combustion was achieved with wedge-shaped chambers, with the valves set off from the vertical.

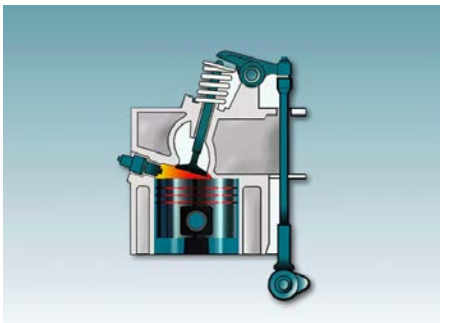

Combustion chamber design

Combustion Knock (Pinking) One problem associated with this design is combustion knock, heard as a pinking sound, which is caused by pre-ignition of the end gas in the thin end of the wedge following normal ignition at the spark plug. This occurs when the pressure buildup across the chamber rises sufficiently to spontaneously ignite the fuel in that area. This detonation shortens the flame spread time and effectively advances the combustion pressure rise and force onto the piston crown.

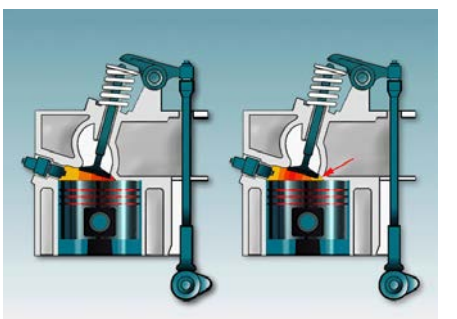

Engine knock can cause damage

Siamese Ports Inlet and exhaust ports can be both on the same and opposite sides of the engine. Two ports sharing a common inlet are called Siamese ports. When a single inlet for each port is used, the method is called parallel ports. Some patterns of port configuration are shown in these diagrams.

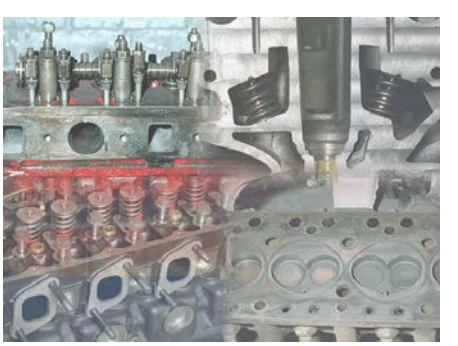

Ports

Pent-Roof Combustion Chamber The majority of modern gasoline engines use a hemispherical or pent-roof combustion chamber. This shape has the smallest surface area and reduces heat energy loss during the combustion stroke, which in turn improves the thermal efficiency of the engine. These designs allow single or dual inlet and exhaust ports with a cross-flow engine breathing system. Some recent developments have included combustion chambers with three inlet and two exhaust valves.

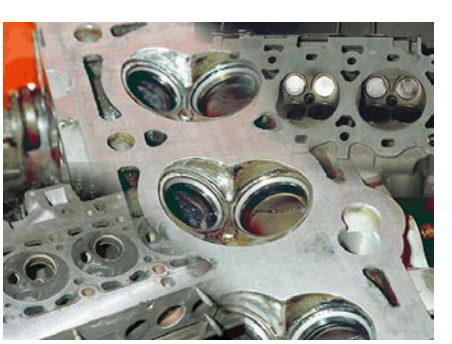

Head designs

Port and Valve Design The port and valve design is important to the swirl of air and gasoline entering the engine because complete, efficient and clean combustion depends upon thorough mixing of fine droplets of gasoline vapor evenly throughout the air charge.

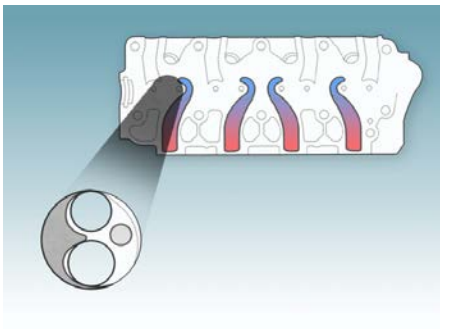

The need for a good mixture is why port and valve design is important

Aluminum Heads Hardened steel inserts are also required in aluminum heads and some cast irons in order to resist the hotter exhaust gases from unleaded fuel and the loss of a protective coating that was provided by the lead additive in gasoline.

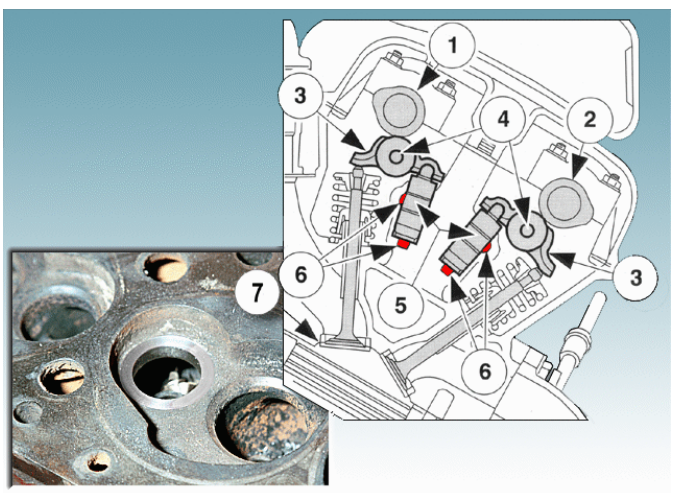

Head features

On OHV Engines On OHV engines, the cam followers and push rods are made to rotate. On many engines, the valves are also made to rotate in the valve seat and guide in order to extend valve and valve seat life. The rotation is achieved by a slight offset or taper on the tappet or rocker face in contact with the cam or valve. In some cases, the valve lock is released to improve rotation. Other engines may be fitted with positive valve rotators, which are integrated with the spring retainer. These are in two parts, with opposing angle faces and rollers to provide a rotational drive as the valve is opened and released.

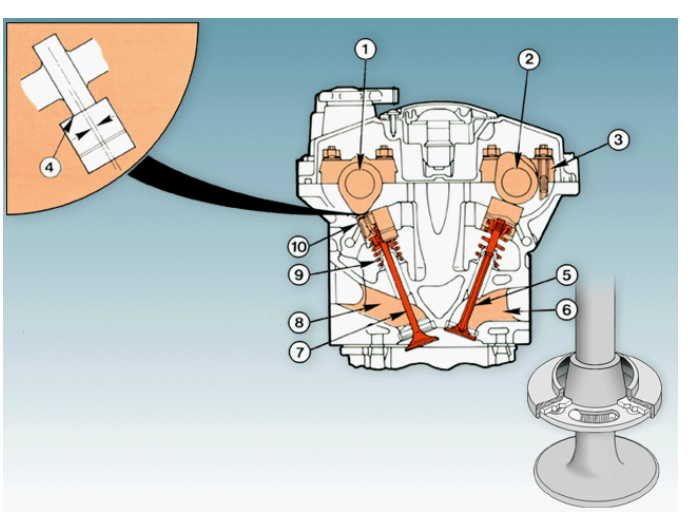

OHV features

Diesel Combustion Chambers Diesel engine combustion chambers are of two main designs. These are direct and indirect. The naming of these engines is a description of the position of the injection of the diesel fuel. The indirect type is used on small high-speed diesel engines up to approximately 2.5 liters. The direct type is used on engines from 1.9 liters upward. Indirect engines generally have a lower thermal efficiency than direct engines but are quieter in operation. These diagrams show the construction of the two types and how air is made to swirl in the combustion chamber before injection of the diesel fuel.

Cylinder Block and Crankcase Construction These two components are usually manufactured as one by a casting process. There have been a few separate cylinder block and crankcase engine constructions. Either cast iron or aluminum alloys are used.

Advantages and Disadvantages of Cast Iron Cast iron is the traditional material because the cylinders can be bored directly in the block. These bores can be re-cut or rebored when worn and will accept a larger diameter piston. The surface of cast iron is porous and able to absorb lubricating oil and provides wear resistance. The main disadvantage of cast iron is weight. Reduced weight with comparable structural strength can be achieved by design techniques, but to produce a lighter engine, aluminum alloys are preferred.

Cast iron block

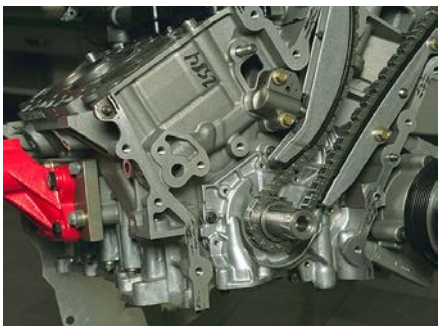
Modern engine

Aluminum Alloys Aluminum alloys do not provide a suitable wear surface for the piston rings, so cylinder sleeves or liners made from cast iron or a steel alloy are fitted into the block.

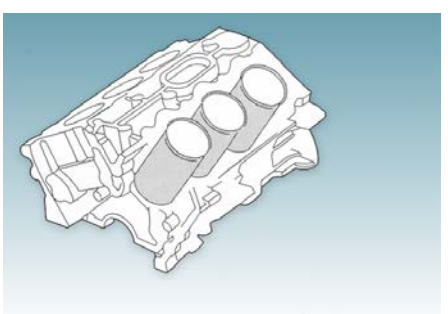
Liners in an aluminum block

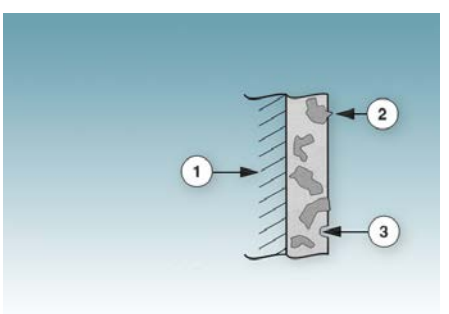

Cylinder coating

Nickel Phosphate and Silicon Carbonate A recent development for cylinder durability in aluminum blocks is a nickel phosphate and silicon-carbonate coating, which although very thin, provides an extremely wear-resistant surface. These cylinders cannot be re-bored, and a new short engine has to be used when repair is necessary.

Make a sketch to show FIVE engine cylinder configurations AND state an advantage and disadvantage of each design.

Read the previous section again and note down some key bullet points here:

-
-
-
-
-

Engine Components

Crankshaft and Camshaft The camshaft rotates once for the two revolutions of the crankshaft during the four-stroke cycle. The drive from the crankshaft to the camshaft has a 2:1 ratio produced by the numbers of teeth on the driven and driver gears. Rotational data for the camshaft is usually given as degrees of crankshaft rotation, and this needs to be considered in relation to the four-stroke cycle. The four-stroke cycle occurring over two full revolutions of the crankshaft has a 720° rotational movement.

Cam and crank movement

Valve Timing Diagram Looking at the four-stroke cycle and the relationships of the crankshaft rotation, the piston position in the cylinder and the opening and closing of the valves is best observed by looking at a valve timing diagram. This diagram is one method of providing data for valve opening and closing positions.

Valve Timing Data Valve timing data is given in engine workshop manuals as degrees of crankshaft revolution. This can be as written data or valve-timing diagrams. In the most popular valve timing diagram, two circles, one inside the other, are used to represent the 720° of crankshaft rotation through which the crankshaft moves for a complete cycle. Each stroke is represented by an arc of 180° with induction and compression on the outer circle and combustion and exhaust on the inner circle. The valve opening and closing positions are marked and the duration of crankshaft rotation displayed by a thicker line.

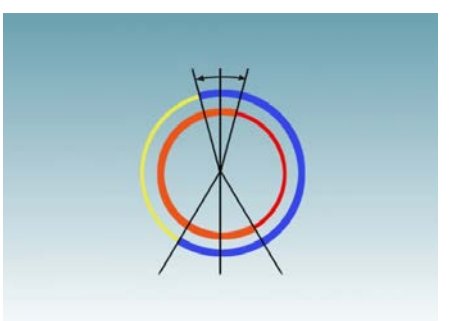

Circular valve timing diagram

Angular, Spiral or Linear Diagrams Other valve timing diagrams can be straight line or spiral representations for crankshaft rotation. Valve timing data is needed for checking engines where unusual symptoms exist and if timing marks on the crankshaft and camshaft drive gears are unclear or missing.

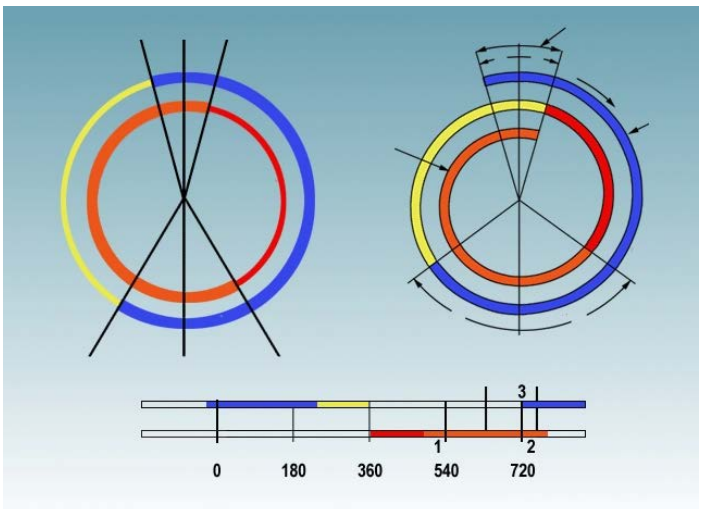

Timing diagrams

Valve Timing The valve timing diagrams show that the valve opening and closing positions do not occur within the 180° of crankshaft rotation for each stroke of the four-stroke cycle. For instance, toward the end of the exhaust stroke the inlet valve begins to open, and this occurs before the exhaust valve has closed.

Exhaust Valve The exhaust valve finally closes as the piston moves down on the induction stroke.

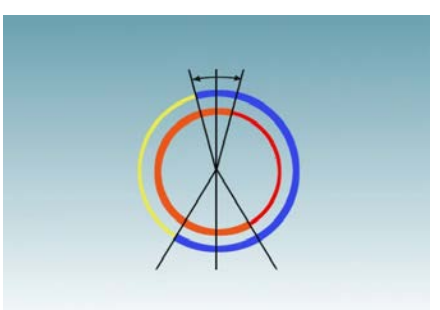
Data relating to lead, lag and overlap

Inlet Valve The inlet valve closes as the piston is rising on the compression stroke.

Valves The exhaust valve opens before the end of the combustion stroke. The opening and closing positions of the valves are specific to individual engines and are matched to other design and performance requirements.

Valve Lead, Lag & Overlap The terms applied to the valves when opening before and closing after the start of a stroke and when both valves are open together are called 'lead,' 'lag' and 'overlap,' respectively. The overlap position is often referred to as 'valves rocking' and can be used as a rough guide as to when a piston is at top dead center (tdc).

Summary What is happening within the four stokes is more complex than their simple descriptions. Therefore, it is important to study them in greater depth.

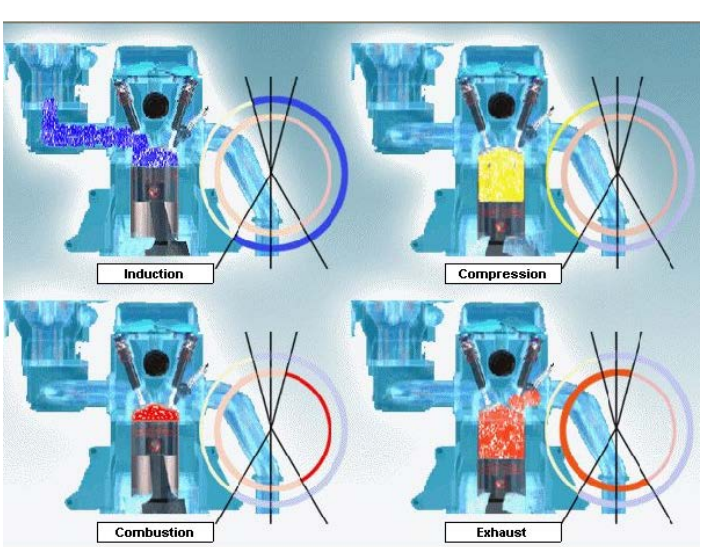

Four-stroke cycle and valve timing data

Cylinder Liners There are two types of cylinder liners: one called wet, the other dry. Wet liners have coolant in direct contact and dry types do not. Wet liners are fitted into the engine block with seals and spacers at the bottom or top, depending on design and are held in and sealed at the top by the head gasket. The spacers are used to adjust all the liners to an equal protrusion from the block.

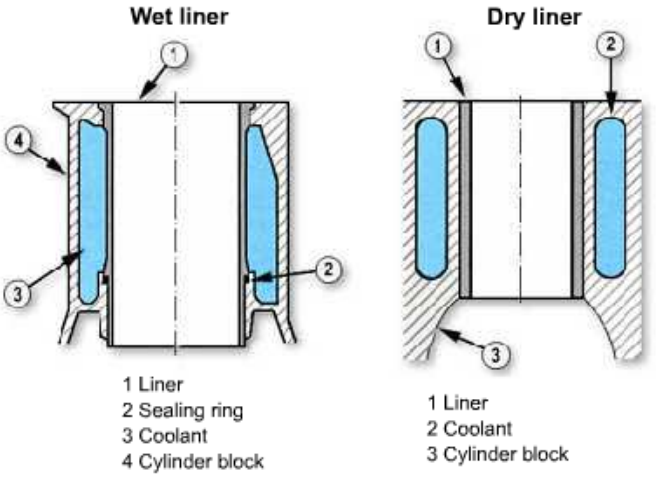

Dry Liners Dry liners are either fitted into the casting mold and held in place by the shrinkage of the casting (providing an interference fit), or they are pressed into a pre-cast block. The cast in types can usually be rebored whereas the pressed liners can be replaced.

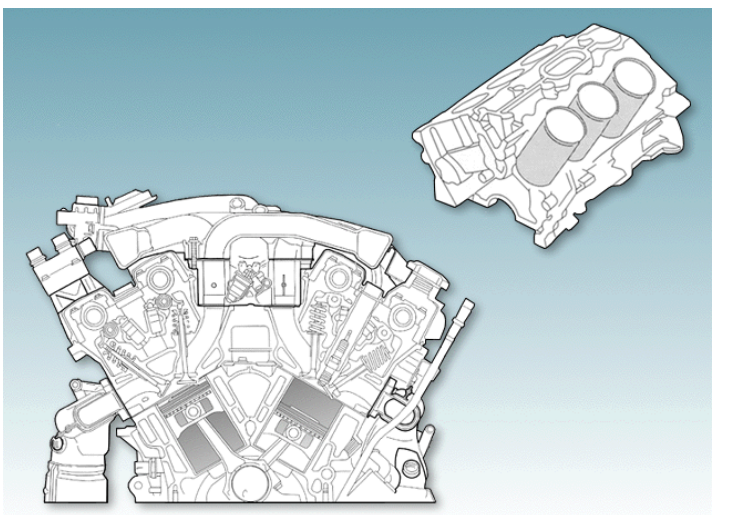

Dry liners are not in contact with the coolant

Replaceable Liners Many modern engines have special surface treatments of the cylinder walls and cannot be rebored or honed. The advantage of using replaceable liners is an extended engine life when liner and piston replacement can be made without the need for specialist reboring equipment. Many large commercial vehicle engines use this technique to shorten off-road times.

Liners

Separate Crankcase and Block Separate crankcase and cylinder block construction is common on large commercial vehicle engines and infrequently used on light vehicle engines. This design has a crankcase that is machined for the crankshaft and has a flat deck to which either individual or multiple cylinder blocks are mounted.

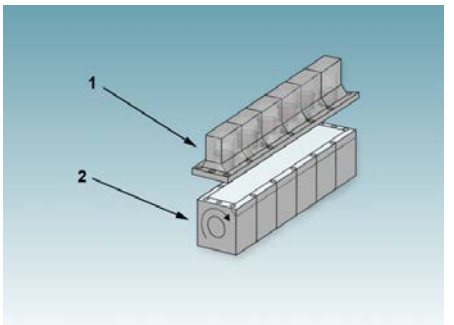

Separate components

State the difference between wet and dry cylinder liners.

Construct a valve timing diagram from the following information:

IVO 5 btdc, IVC 28 atdc

EVO 18 bbdc, EVC 6 atdc

Read the previous section again and note down some key bullet points here:

-
-
-
-
-

Engine Operating Details

Atmospheric Pressure For any object or mass of air, gas or liquid to be moved, there has to be two or more unequal forces applied. The force of gravity is a permanent force that exists naturally and holds the atmospheric gases to the earth's surface. Gravity has a sea-level pressure of 1 bar or roughly 15 pounds per square inch (psi).

Feel the pressure...

Naturally Aspirated Engine On a naturally aspirated engine (one without turbo or supercharging), atmospheric pressure provides a high force whereas the enlarging volume inside the cylinder as the piston moves from top dead center to bottom dead center creates a vacuum or depression and a low force. Atmospheric pressure overcomes the vacuum and air is forced into the cylinder. It should be noted that in all cases the larger force overcomes the lesser force. In this case it is the atmospheric pressure that pushes air into the cylinder and not the vacuum drawing the air in. Any restriction to the airflow or loss of vacuum will limit the effectiveness of the pressure differential.

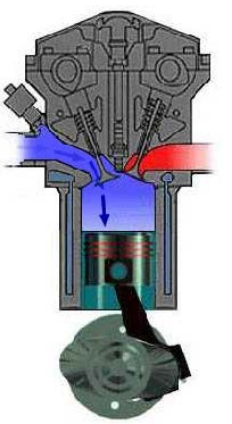

Inlet of fuel-air mixture

Volumetric Efficiency On a naturally aspirated engine (one without turbo or supercharging), atmospheric pressure provides a high force whereas the enlarging volume inside the cylinder as the piston moves from top dead center to bottom dead center creates a vacuum or depression and a low force. Atmospheric pressure overcomes the vacuum and air is forced into the cylinder. It should be noted that in all cases the larger force overcomes the lesser force. In this case it is the atmospheric pressure that pushes air into the cylinder and not the vacuum drawing the air in. Any restriction to the airflow or loss of vacuum will limit the effectiveness of the pressure differential.

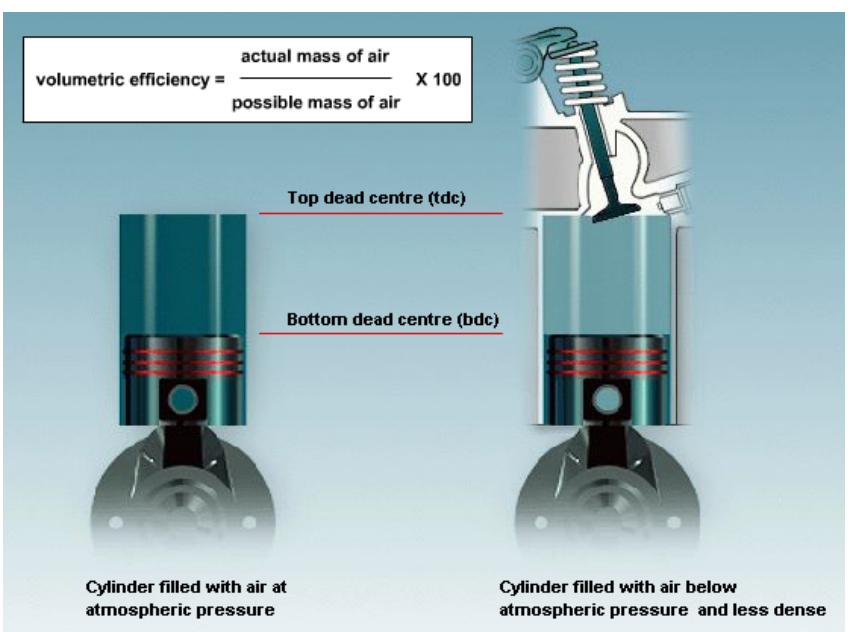

Breathing or Aspiration With a higher percentage, a greater quantity of air will be provided for expansion during combustion, and this improves performance. The intake and exhausting of air through an engine is known as 'breathing' or 'aspiration' and is important to produce efficient and clean combustion.

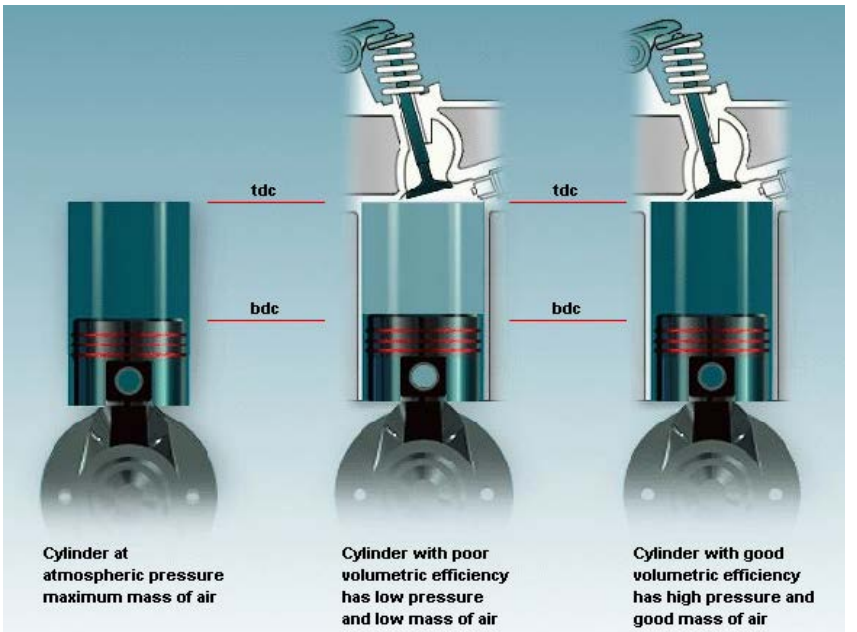

Gasoline and Diesel Gasoline burns in air because of a chemical reaction between the carbon and hydrogen in the gasoline and the oxygen in the air. These combine and release heat energy, carbon dioxide, and water. For complete and clean combustion to occur, the gasoline should be atomized in very fine droplets and be evenly distributed throughout the air charge. The incoming airflow is encouraged to swirl as it enters the cylinder. This is created by careful design of the inlet ducting, manifold, and ports. The swirl should continue throughout the induction, compression, and combustion strokes.

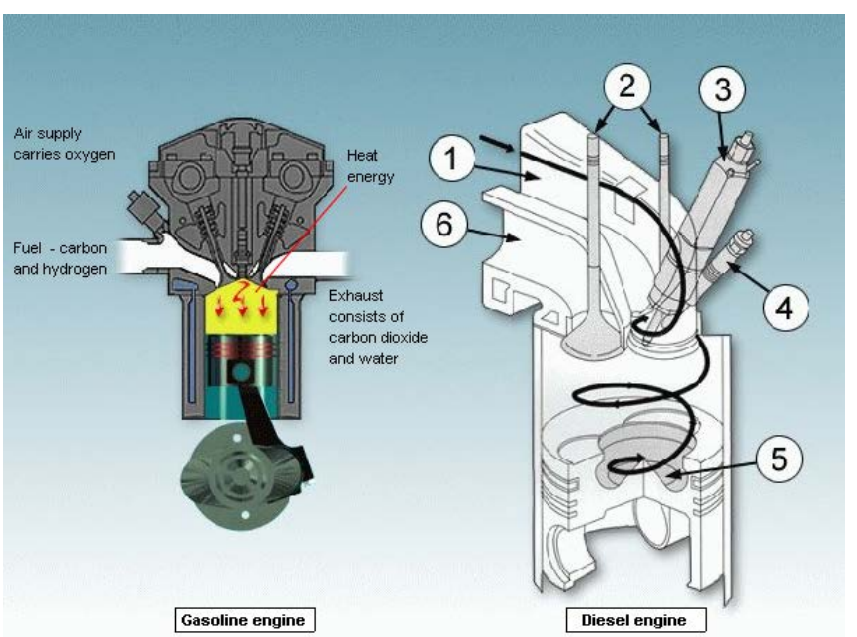

Inlet Valve The inlet valve remains open after the piston has reached bottom dead center (bdc) and has begun to move toward top dead center (tdc) on the compression stroke. The amount of piston movement is small as the crankshaft swings across the 180^0 position when the piston is at bottom dead center (bdc). The 'valve lag' allows the momentum of the incoming air charge to force a little more air into the cylinder even though piston movement is reducing the cylinder volume

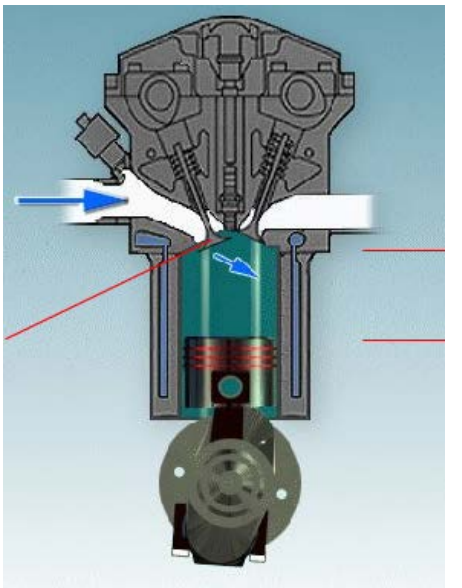

Inlet valve position

The Compression Stroke Following the induction stroke is the compression stroke. The camshaft, rotating at half engine speed, is timed to open and close the valves in each cylinder in sequence with the four-stroke cycle. During the compression stroke, the cam followers are running on the backs of the cams, and both the inlet and exhaust valves remain closed and seal the top of the combustion chamber.

Piston Rings A set of hardened alloy steel or cast iron rings are fitted into radial grooves machined into the walls of the piston just below the crown. These provide a gas-tight seal between the piston and the cylinder walls. As the piston moves from bottom dead center (bdc) to top dead center (tdc), the space above the piston is reduced in volume. The air charge cannot escape so it becomes compressed. Most gasoline engines have a compression ratio of between 8:1 and 10:1. This means that after compression, 8 to 10 times more air and fuel is available to power the engine than there would be without compression. The nature of the combustion process also is more effective in a compressed air charge.

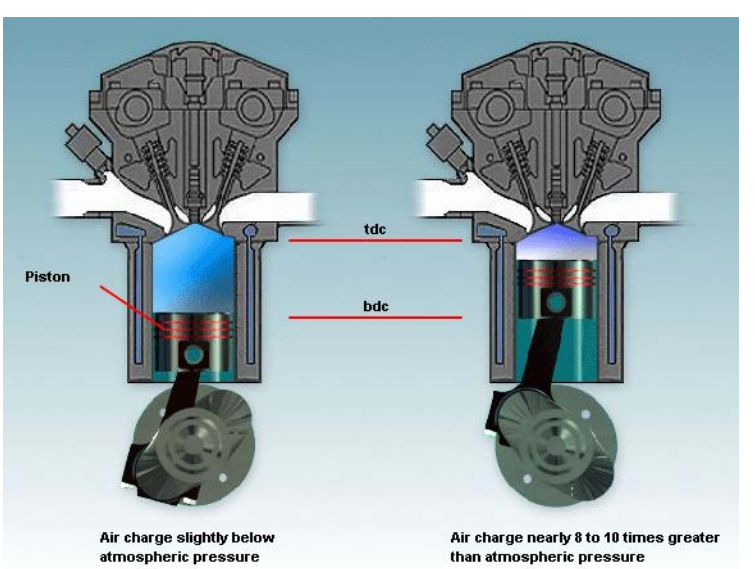

Temperature Rise during Compression (Gasoline) During compression, heat energy is concentrated and movement energy is introduced and converted to heat energy in the air charge; this causes a sharp rise in the temperature of the air charge in the cylinder. The rise in temperature is dependent upon the rate of compression and heat lost through the cylinder walls. The temperature rise is roughly proportional to the pressure rise and limits the amount of compression on a gasoline engine to a point just below the self-ignition temperature of the gasoline. Fuel vapors will ignite at and above the flash point when an external ignition source is applied or at the self-ignition point when the temperature of the vapor is high enough to cause spontaneous ignition.

Temperature Rise during Compression (Diesel) The compression pressure of a diesel engine must cause the air temperature to rise above the self-ignition temperature of the diesel fuel that is injected into the combustion chamber at the end of the compression stroke.

Compression Ratios Direct injection engine compression ratios are usually between 16:1 and 21:1 depending on engine capacity. This is sufficient to raise the air charge temperature high enough for self-ignition of the fuel and to keep 'knock' to acceptable levels. Indirect injection compression ratios are usually higher: from 22: 1 to 25:1 this increase in compression and the resulting temperature overcomes the heat lost to the greater surface area of the combustion chamber and top of the cylinder. The combustion process is slowed by this design and diesel knock is not as loud.

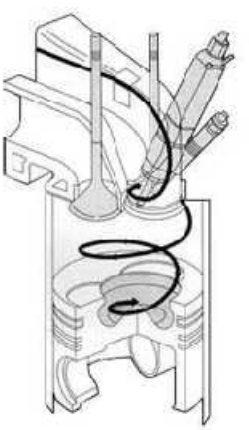

Compression ratios vary…

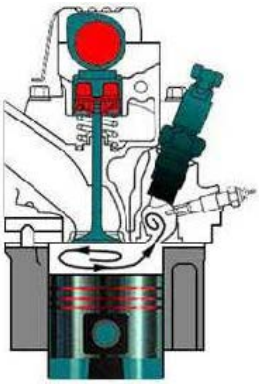

With different engine types

Complete Combustion of Fuel and Oxygen Combustion in an internal combustion engine is a chemical reaction between the carbon and hydrogen in the fuel and the oxygen that is approximately 20 percent of air. During combustion, the carbon combines with the oxygen to form carbon dioxide and the hydrogen combines with oxygen to form water. Nitrogen, which makes up most of the rest of air, passes through the engine. There is no reaction with nitrogen during combustion provided that combustion temperatures are within design limits. This process can be represented by using chemical symbols for each element. The equation then looks like this: $CH + O^2 + N = CO_2 + H_2O + N$

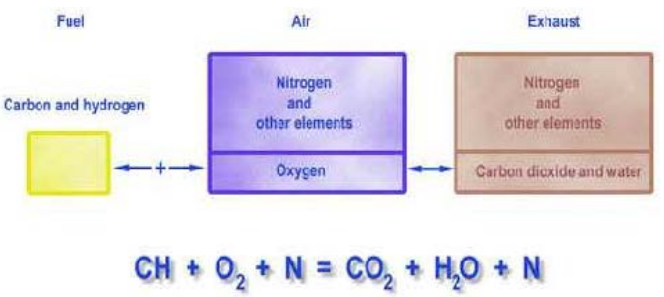

Reaction equation

Incomplete Combustion of Fuel and Oxygen If incomplete combustion occurs carbon monoxide is produced, and when temperatures are too high, nitrogen oxides are formed. Both these gases are harmful atmospheric pollutants. Environmental protection regulations in most countries require control of these engine emissions by regular maintenance and checks of older vehicles and the fitting of catalytic converters on newer vehicles. The chemical equation for incomplete and overheated combustion looks like this: $CH + O^2 + N = CO_2 + H_2O + N + CO + NOx$

Ignition Timing Although the fuel burns in an extremely short time, the process is not defined as an explosion but rather as rapid burning with a variable 'flame spread' depending upon fuel quality, air-to-gasoline mixture strength, engine temperature, and the pressure of the air charge above the piston. The timing of the ignition spark at a point slightly before top dead center (tdc) at idle speed allows for the time that fuel takes to burn and produce pressure above the piston at the optimum position of the crankshaft.

Gasoline Gasoline is given an octane rating as a measure of its ability to reduce knock. In practical terms, this means that the higher the octane number the slower will be the speed of combustion. The octane rating provides a constant against which ignition timing and advances for increasing engine speed can be set. Engines are designed to operate on fuels of specific octane ratings. Fuel with correct octane ratings should be purchased when filling the fuel tank on a vehicle.

Use the correct fuel

Mixture Strength Mixture strength is the ratio between air and gasoline. A chemically correct ratio for complete combustion is 14.7:1 by mass. That is by weight and not by volume. When more air is present, the mixture is said to be weak. Lean-burn engines have used slightly weak mixtures to reduce exhaust emissions. When more gasoline than air is present, the mixture is said to be rich. Both weak and rich mixtures burn less quickly than chemically correct mixtures, but weak mixtures create higher temperatures that can lead to engine overheating and possible to valve, valve seat, and piston damage.

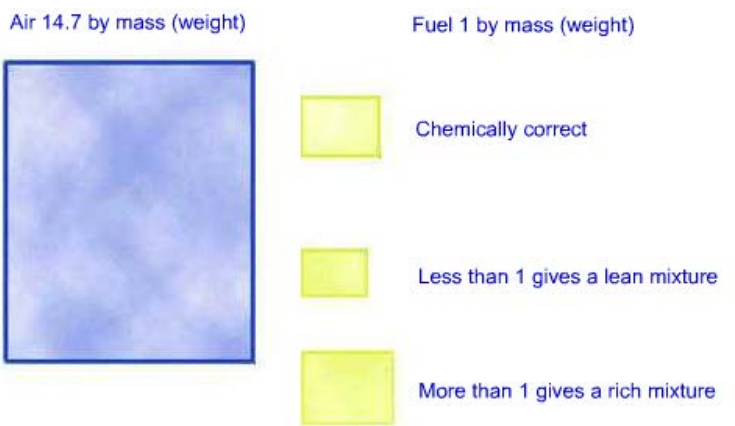

Mixture ratio

Cylinder Pressure in a Gasoline Engine A properly controlled combustion process will generate a very hot gas charge above the piston. The energy in the hot gas charge will attempt to expand that charge, but if the expansion is contained then the pressure will rise. In a cylinder, the rate of expansion of the space above the piston is not quick enough to prevent the pressure rise and therefore considerable force is applied to the piston crown. The graph shows a typical pressure rise in a cylinder during light pressure conditions.

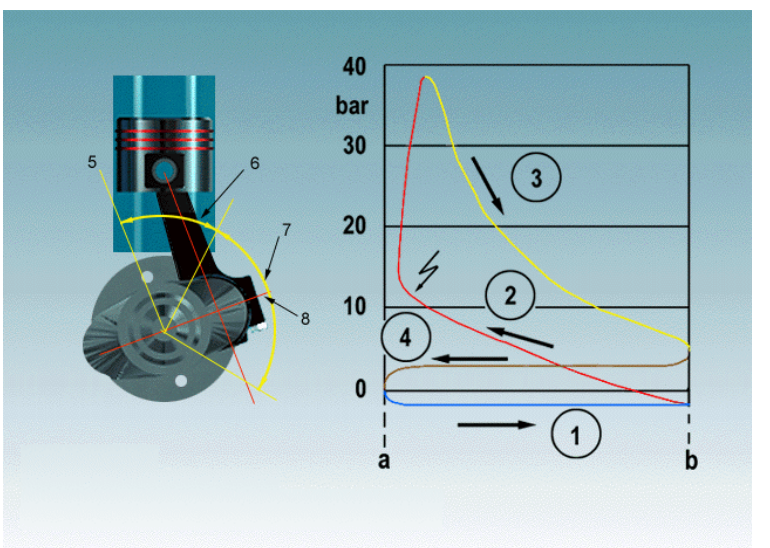

Gasoline engine figures – Diesel figures are approximately double

Cylinder Pressure in a Diesel Engine For the force on the piston crown to be most effective, the position of the connecting rod relative to the crankshaft is important. Maximum torque or turning force is obtained when a projected line along the length of the connecting rod is at right angles to a projected line through the crankshaft main and big-end bearings. When maximum force is applied as the crankshaft rotates about this position, maximum torque is obtained. In addition, fuel usage is both effective and efficient.

Ideal Combustion The ignition and fuel systems on the engine are timed and regulated to meet this ideal position. Damaging effects can occur if high combustion pressures are applied in front of or after this position. Early ignition, for whatever cause (such as too low an octane rating or over advanced ignition timing), will cause engine knock, which is heard as a 'pinking' sound.

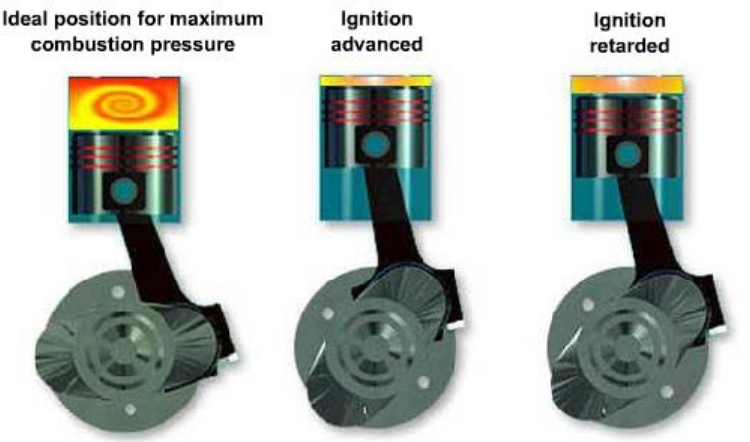

Pinking Pinking is heard when the force applied to the piston crown runs down an almost straight line through the connecting rod and crankshaft web into the engine crankcase at the main bearings. All of the components in this line are being subjected to excessive forces that will cause considerable damage if the fault is not quickly corrected.

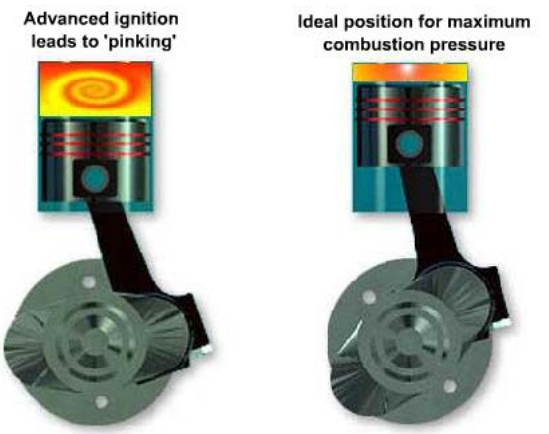

Advanced Ignition When the engine is 'pinking ' the energy from combustion is not being used, as it should be to turn the crankshaft. The energy finds other ways to dissipate, such as through the components to cause fractures, or to heat the engine to abnormally high temperatures which the cooling system cannot remove rapidly enough and this results in burning of the piston crown, valves and valve seats.

Retarded Ignition All engine overheating problems are potentially harmful to the engine parts. Weak gasoline-to-air mixtures or retarded ignition timing alters the combustion time in comparison to chemically correct mixtures. More heat is passed into the cylinder walls and cylinder head, increasing the engine temperature and reducing the available energy to turn the crankshaft. Exhaust gas temperatures are higher, and exhaust valves and seats can become prematurely pitted and burnt.

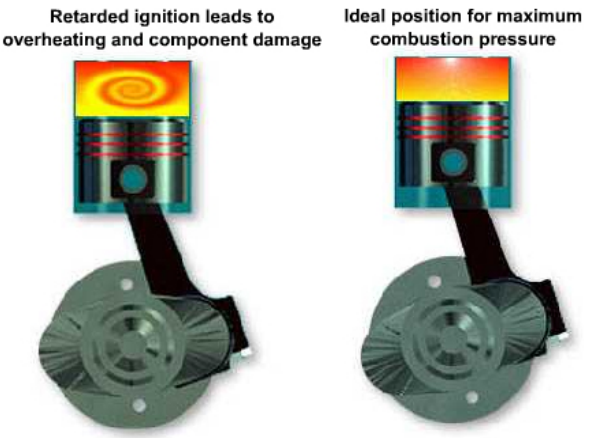

Exhaust Gas Recirculation (EGR) System Diesel engines always have more air than the minimum required for complete combustion of the maximum amount of fuel that can be injected by a properly adjusted fuel injection pump. The surplus oxygen can combine with nitrogen in the air to form nitrogen oxides (NOx) which are an acidic air pollutant. Exhaust gas recirculation is often used to maintain the total quantity of the air charge but to reduce the concentration of oxygen.

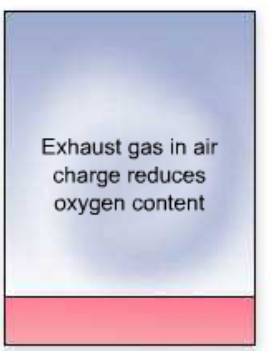

Cylinder charge with exhaust gas recirculation

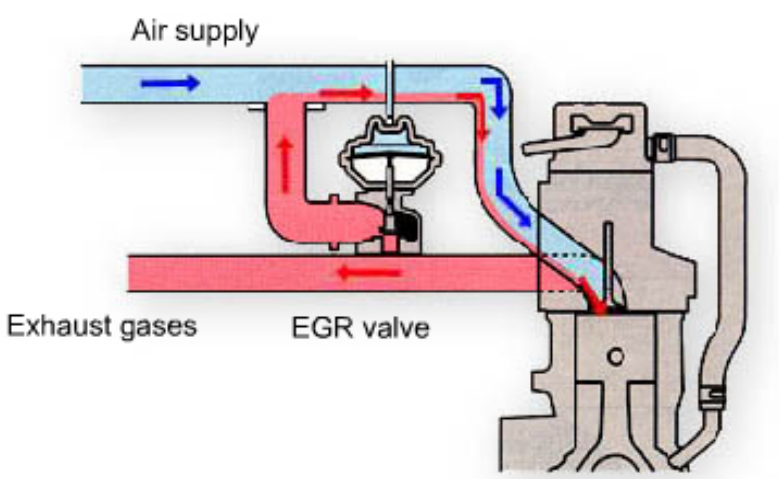

Good Combustion Good combustion giving effective, efficient, and clean exhaust gases can only be obtained from an engine in sound mechanical condition and correctly tuned for ignition and fuel delivery.

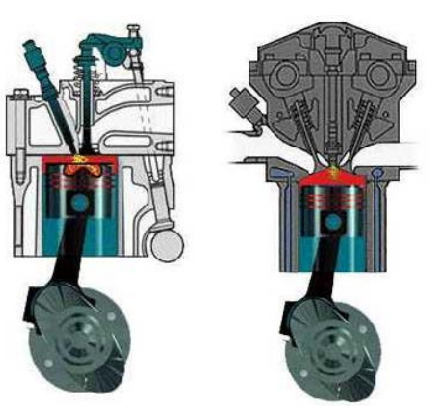

Good… Combustion

Describe the effects of incorrectly set ignition timing.

Read the previous section again and note down some key bullet points here:

-
-
-
-
-

Engine Designs

Technical Details of a V6-Cylinder 4-Stroke OHC Gasoline Engine The engine shown is one of a new generation of gasoline engines. It uses the latest developments in design technology to meet stringent environmental protection regulations. Its electronic engine management system creates very low exhaust pollution levels. Because vehicles must maintain minimum pollution levels during the life of the vehicle, the repair procedures and any replacement components must be to manufacturer's procedures and specifications.

V6 engine

Cylinder Block and Crankcase The cylinder block and crankcase are designed by computer to be as light as possible. Ribs are built in as part of the casing. These improve structural strength where it is needed. Many modern cylinder blocks have ladder rack or a split crankcase to form the lower half of the main bearings. Other similar engines have through bolts from the cylinder head into the engine crankcase in order to give even distribution of loads inside the casting. Aluminum alloys are used and dry liners of alloy steel or cast iron are cast in during manufacture. Very close manufacturing tolerances are employed and cylinder blocks are code marked with their exact dimensions for cylinder bore diameters. Reboring is not possible with these new engine manufacturing methods.

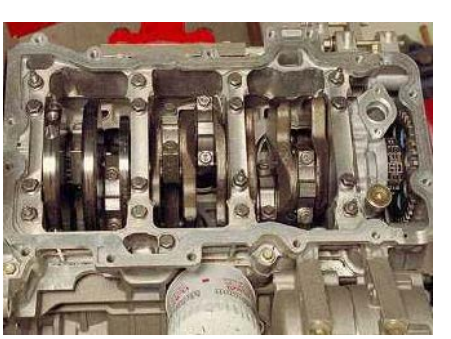
Crankcase

Pistons and Piston Rings The pistons are a selected fit to suit the exact size of the cylinder bore. Aluminum alloyed with silicon and other elements gives a tough, low-expansion material that is used for lightweight pistons. Heat and thermal expansion is controlled in the piston by the use of transverse slits to prevent heat flow from the crown to the skirt and/or by the use of steel inserts. Some areas of the piston that are subject to high loads are reinforced with cast-iron components. These pistons are shorter and lighter than older designs and contribute to the increases in power and fuel efficiency. A convex crown improves air charge turbulence and combustion chamber configuration. Thin piston rings and Teflon coating of piston skirts reduces frictional losses and improves performance. There are usually two compression and one oil control ring on engines of this modern type.

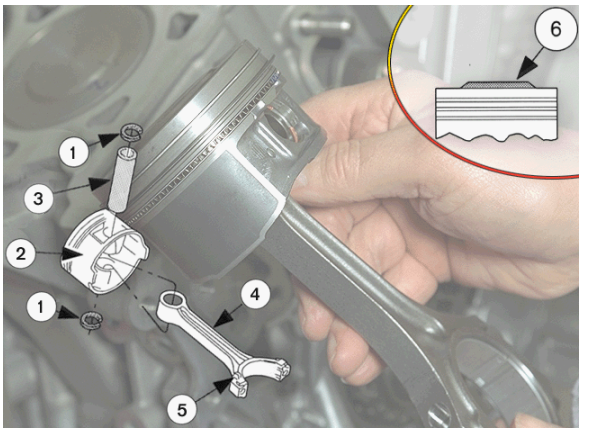

Details of the piston

Connecting Rod and Piston Pin The connecting rods on this engine are forged, but new materials are being used for some modern engines. These are powdered metals that are formed by a sintering process that involves the squeezing and heating of the material in a die under high pressure until it forms a tough, durable solid component. These powdered metal connecting rods are lighter in weight than cast and forged types for the same strength. The big end cap is a 'cracked type' manufactured by a laser cut and fracture, which gives a unique fit for all big end caps. A bush is fitted in the little end for a floating piston pin. The piston pin is a floating type, which is secured in the piston with circlips.

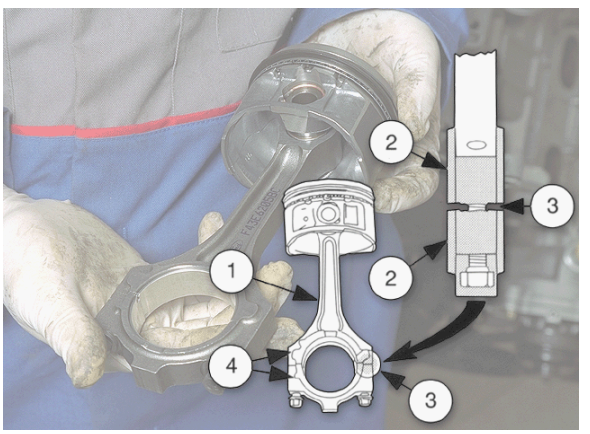

Details of the con rod and piston pin

Crankshaft and Bearings This crankshaft has offset big-end journals for each bank of cylinders. The journal pairs are set at 120° intervals and offset to meet the geometry of a 60° vee configuration. The firing order is matched to alternate banks firing from the front to the rear in sequence. 1-4-2-5-3-6.

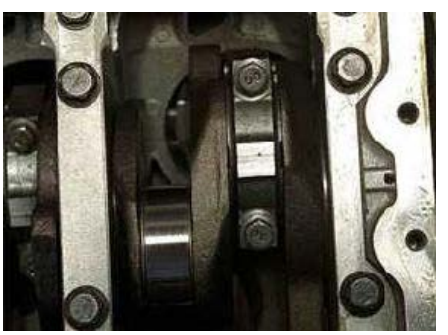
Crank

Crankshafts Construction Crankshaft construction and bearings have improved with computer design, balance techniques and changes in the surface treatment of the journals and the alloy contents of the shell bearing material. The expected life of modern crankshafts is greater than for older engines, and repair of these crankshafts by regrinding may not be possible due to the nature of the surface treatment of the journals.

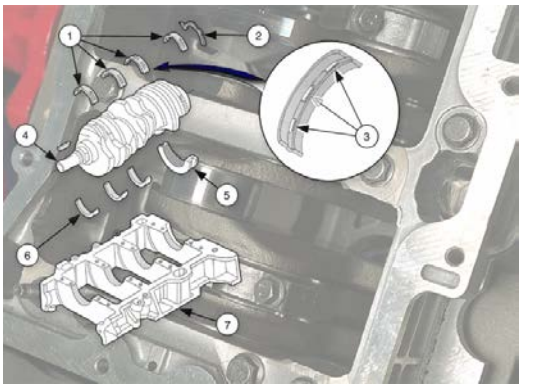

Crank details

Replacement of Worn Parts Many modern engines require replacement of worn parts by an assembled block or short engine for all crankshaft, cylinder and piston defects.

Engine on a stand

Cylinder Head Gasket Improvements in engineering and materials have made it possible to produce smooth and accurate mating surfaces between the engine decks and the cylinder heads. The need for a fully compressible gasket is reduced, and many modern engines use a thin multi-layered steel-backed 'sandwich' or a single skin metal gasket. These have a raised ring around each cylinder, and for the coolant and oil passages from the block to the cylinder head. These gasket designs help to reduce distortion during installation of the cylinder heads.

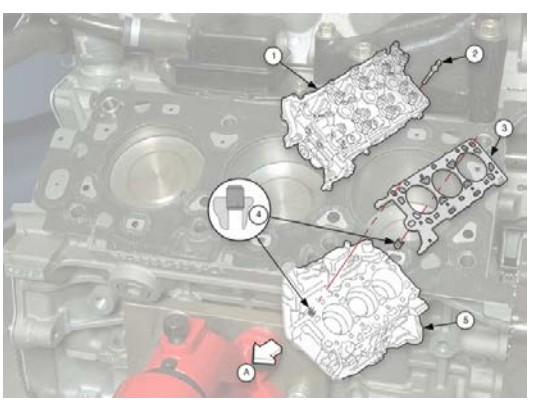

Gasket

Cylinder Heads This engine, like many modern ones, uses four valves for each cylinder. The combustion chamber design is a pent roof type, which is adapted from the hemispherical design in order to accommodate the valves and valve operating mechanism. The head is manufactured from a similar aluminum silicon alloy as the engine block. It is cast for water passages and inlet and exhaust ports and the mounting of two camshafts for each bank of cylinders.

Head

Cam mountings

Vee Configuration Two cylinder heads are used for a vee configuration, and the inlet manifold is located in the valley between the heads. Two exhaust manifolds are fitted, with one on each side of the engine.

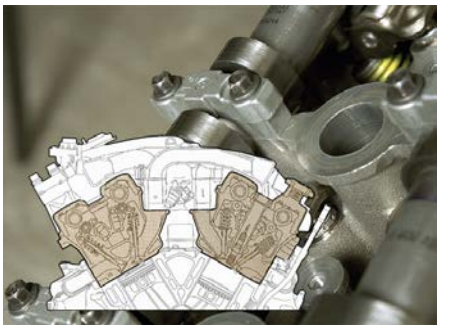
Vee layout

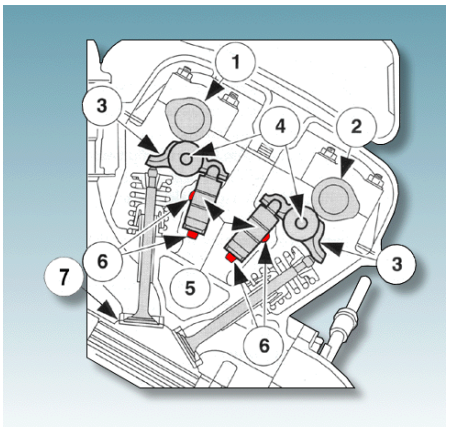

Valve details

Hardened Valve Seat Inserts The combustion chambers are fitted with hardened valve seat inserts because the aluminum alloy used in construction is not suitable.

Camshaft and Valve Operating Mechanism This engine uses twin camshafts and rocker arms to transmit movement to the valves. Other arrangements may use a single camshaft and rockers or two camshafts with direct-acting bucket tappets.

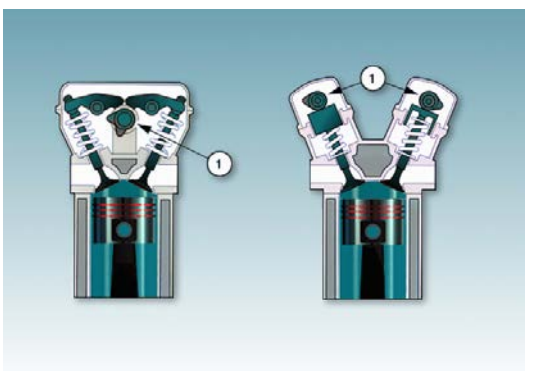

Valve mechanisms

Composite Camshafts The camshafts are mounted directly in the cylinder head on aluminum bearings and held in place with bearing caps. A thrust bearing is located at the sprocket end of each camshaft. Composite camshafts using a hollow steel shaft and shrink-fit cam lobes are often used instead of the conventional single-piece castings. The composite shaft is lighter than the conventional type. The low weight and low frictional forces of roller rocker arms improve the engine's operating characteristics.

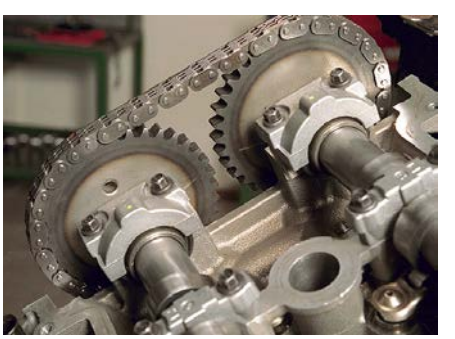
Cam drive

Valve Mechanisms Hydraulic pedestals support roller rocker arms at one end and the other acts on the valve. The cam runs above the center of the rocker arm. Oil supply to the hydraulic pedestal is from a special drilling in the head. Valve clearances are automatically adjusted by the hydraulic pedestals. The rocker is lubricated from the camshaft circuit. Valves are made to rotate in the valve seat and guide in order to extend valve and valve seat life. On most engines, the rotation is achieved by a slight offset or taper on the tappet or rocker face in contact with the cam or valve. Some engines are fitted with additional valve rotators, which are integral with the spring retainer. These are in two parts with opposing angled faces and rollers to provide a rotational drive as the valve is opened and released.

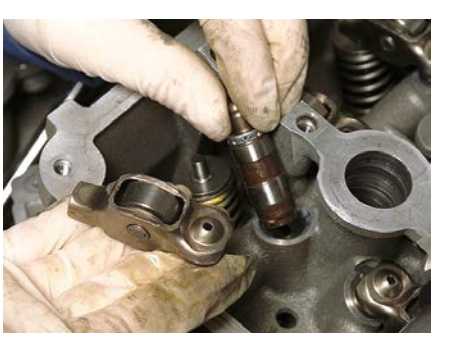
Hydraulic lifters

Inlet and Exhaust Valves These valves are similar to earlier designs. One major advancement is the use of a sodium-filled exhaust valves. These have a hollow core that is filled with sodium. The sodium melts when the valve is hot and provides a rapid heat loss from the valve face to the stem. This gives improved cooling of the valve and can reduce the temperature by as much as 100° □C. referred to as bimetallic valves and the conventional valves as single-metal valves. A sodium-filled valve must not be cut into because sodium is highly flammable and will ignite on contact with air.

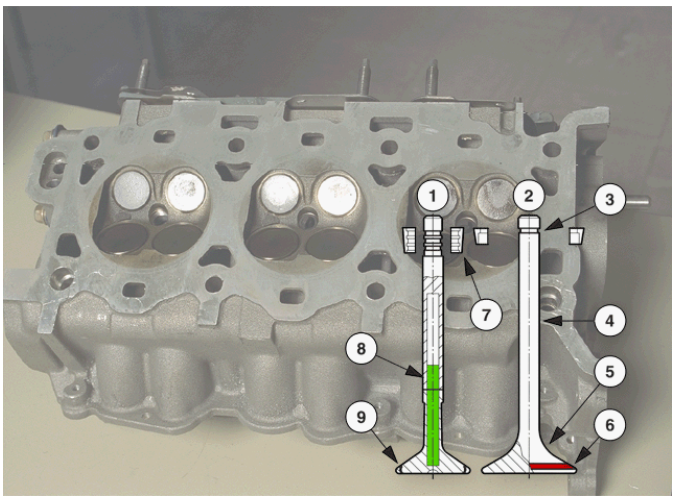

Valve details

Re-cutting or Replacing Valves Many modern valves are treated with a special coating on the seat. These valves cannot be re-cut and must be replaced if worn. The valve seats, where possible, should be refaced instead of lapping. This will retain the coating. On some engines, re-cutting is not possible but it is permitted to lap in new valves. Follow the manufacturer's instructions for valve and seat re-facing.

Grinding valves

Camshaft Drive This engine uses two chains to drive the camshafts fitted on top of each cylinder head. Each camshaft and the sprocket forms a single unit, and one camshaft also carries a vibration damper. One chain drives the two camshafts for each bank of cylinders. Hydraulic tensioners for each chain provide automatic adjustment for the life of the engine.

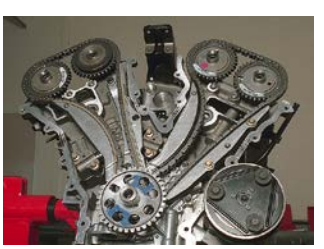
Drive

Tensioner

Explain why some valves are filled with sodium.

Read the previous section again and note down some key bullet points here:

-
-
-
-
-

Valves and Valve Gear

Overhead Valve (OHV) Layouts The term overhead valve is used to describe the development of engines from side valve to valves located in the cylinder head above the cylinders. The valve operating mechanism to transfer the lift from the cam to the valve became more complex than the direct cam and tappet-to-valve contact of the older side-valve engine.

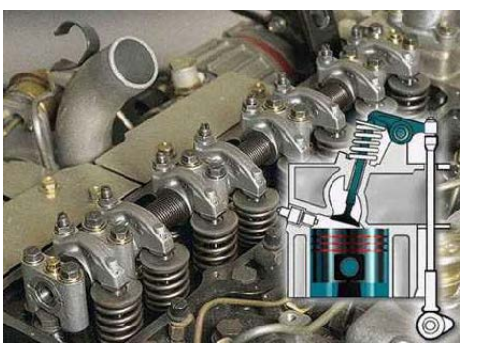

OHV

OHV Valve Gear The OHV valve gear consists of the camshaft, cam followers, push rods, and a rocker shaft or studs carrying rockers that push onto the valve stems.

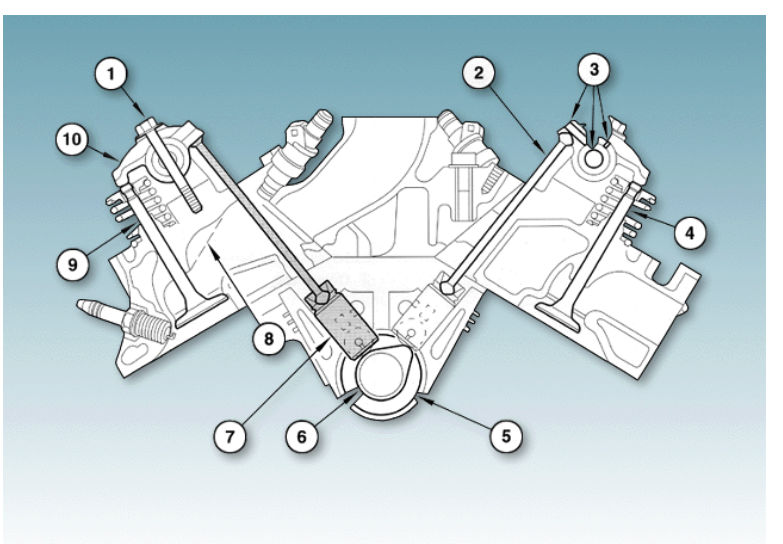

OHV gear

Valve Clearances Adjustment of the operating clearance that allows for thermal expansion and lubricating oil penetration is made by screw-threaded adjusters on the rocker arms or studs. Hydraulic lifters in place of the solid-cam followers are used for self-adjustment.

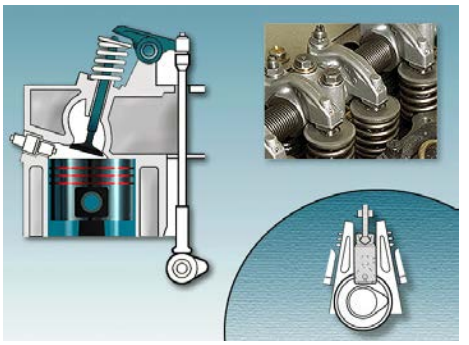

Valve mechanisms

Overhead Cam (OHC) Layouts The term overhead cam distinguishes the position of the camshaft when it is fitted into the cylinder head. There are a number of single overhead camshaft (SOHC) positions using direct or rocker arm mechanisms to push onto the valve stems. These design variations have resulted from the need to maintain a close tolerance in running clearances.

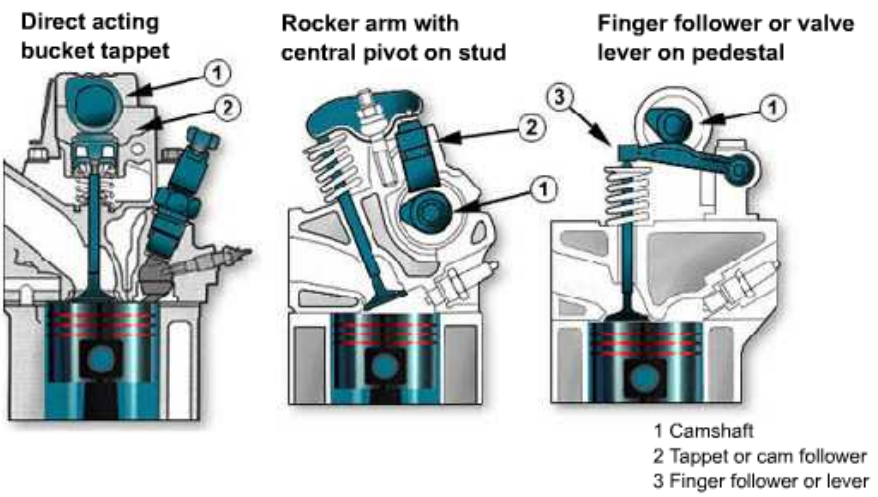

Double Overhead Camshaft Engine (DOHC) There are also twin or double overhead-camshaft designs (DOHC) using direct and rocker arm opening of the valves. DOHC engines can be used for either single or double inlet and exhaust valves or for multi-valve arrangements with five valves per cylinder.

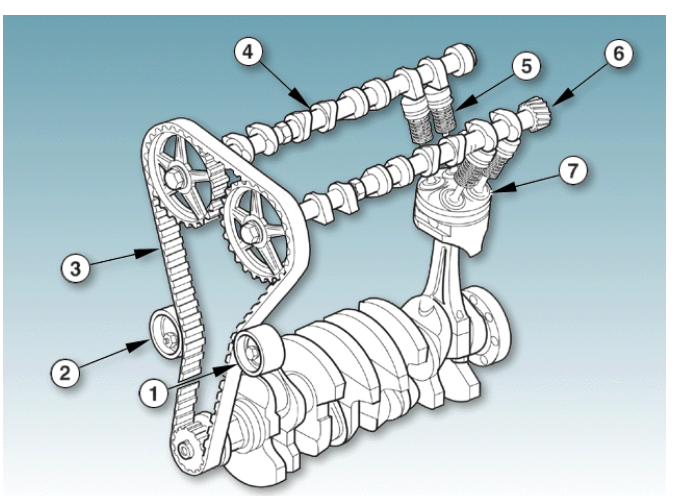

DOHC

Adjustment Methods The adjustment methods for direct cam operation consist of shims or screw wedge adjusters. These methods either require complicated measurement and selection of shims or wider tolerances than normally used. Hydraulic cam followers can be used to provide automatic self-adjustment.

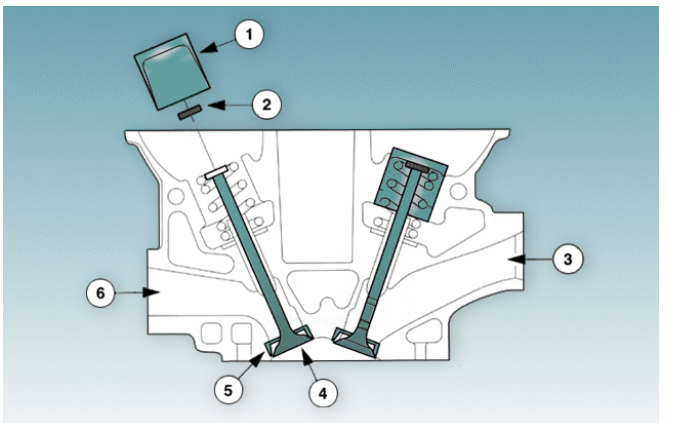

Valve components

Rocker Arm Systems Rocker arm systems can incorporate adjusters with close tolerance adjustment and are preferred by many manufacturers. Two basic systems have been used, a rocker and shaft or pivot stud arrangement and a rocker arm supported on a pedestal at one end, the valve stem at the other and with the cam in between. A hydraulic pedestal is used for self-adjustment.

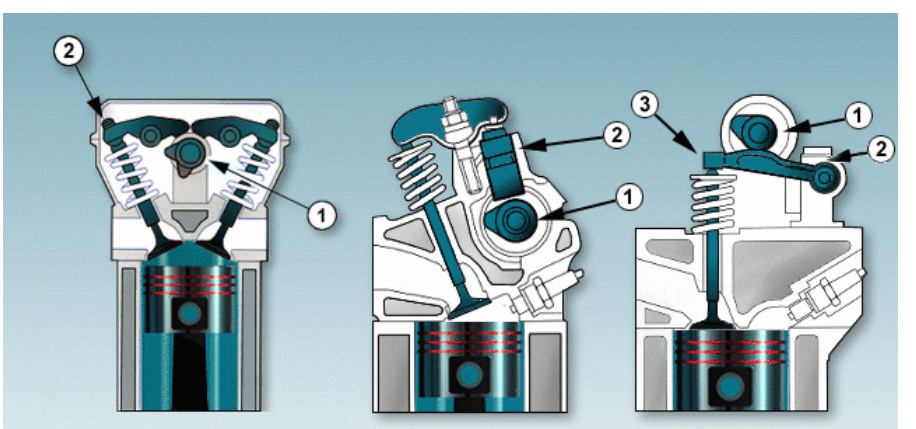

Mechanisms

Hydraulic Valve Adjustment This diagram shows an engine oil lubrication circuit, which feeds hydraulic tappets for self-adjustment of valve clearances. Always refer to engine manufacturer's data for the type and service requirements for individual engines. Special procedures for setting up hydraulic tappets during and after replacement are given by manufacturers and these must be followed to prevent damage to the engine.

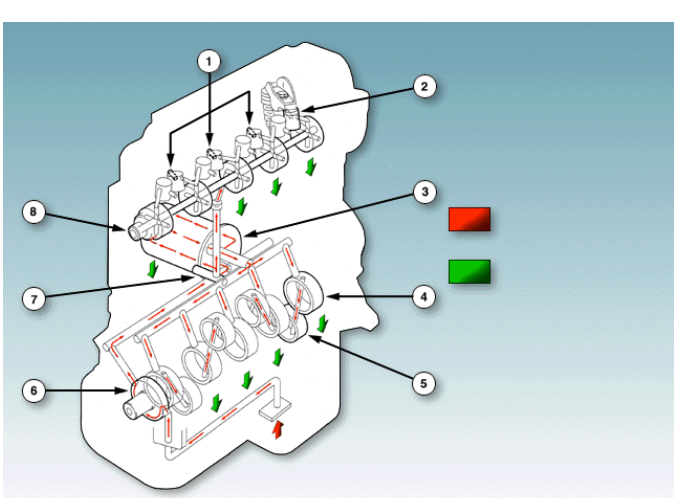

Hydraulic components

Variable Cam Timing (VCT) A recent development, one likely to be used on many more engines in the future, is variable cam timing on the inlet valve cam.

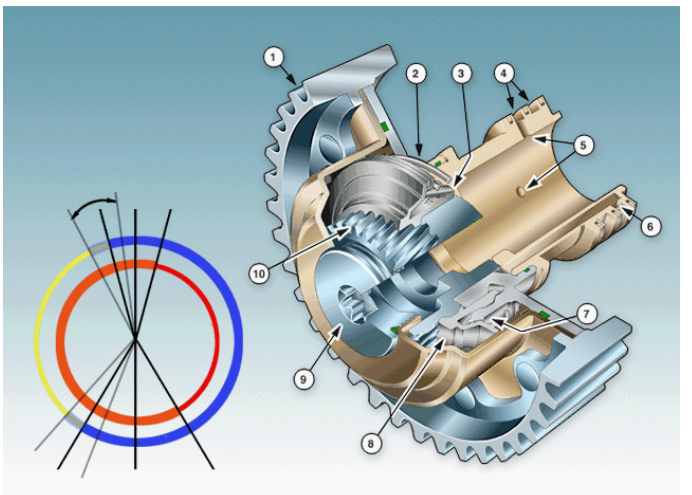

Timing is changed under electronic control

Airflow Oscillations in the Inlet Manifold During the induction stroke, a mass of air enters the cylinder. On a four-cylinder engine, there are two pulses of air for each revolution of the engine. The mass of air in the inlet manifold moves in forward pulses when the inlet valves are open and backward as they close. This sets up a frequency of oscillation, which is dependent upon the engine speed. Variable cam timing uses a changing frequency of oscillation of the induction air mass as the engine speed increases. This allows for optimum cylinder charging. The advantages are higher torque and power over the entire engine speed range.

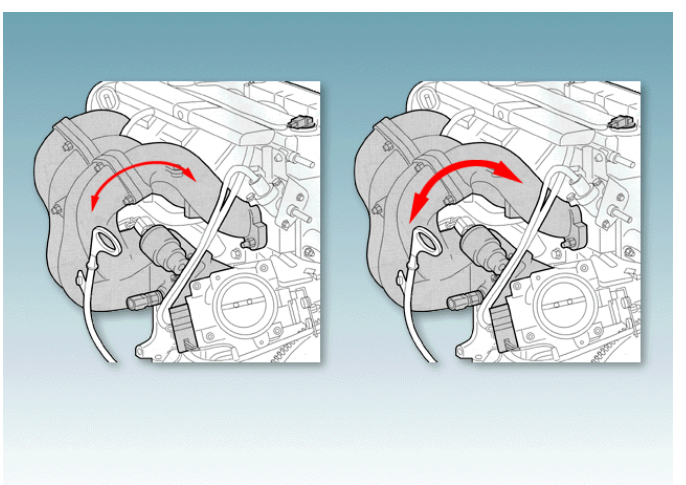
Inlet manifolds

Methods of Variable Cam Timing (VCT) A number of methods have been used to provide the variable cam timing. These include an adjustable camshaft drive gear with helical teeth between the driven gear and the camshaft. Electrohydraulic control of the helical gearing shifts a gear hub for timing changes. Other methods have included a centrifugal advance and a pedestal system using hydraulic pressure to raise and lower the pedestals.

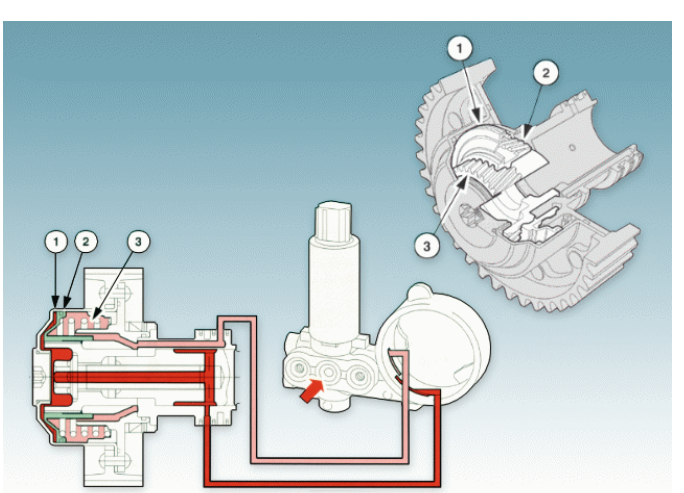

Electrohydraulic control method

State THREE advantages of hydraulic tappets.

Read the previous section again and note down some key bullet points here:

-
-
-
-
-

Friction and Lubrication

Introduction Engines on modern vehicles are complex machines that are subjected to very high stresses and sliding contact on the components.

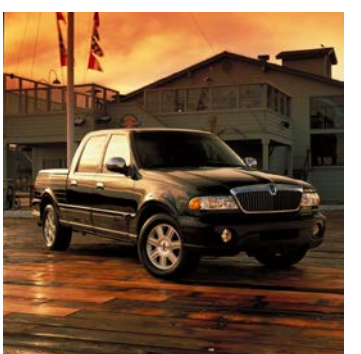

Lubrication is essential[2]

Friction Requires Lubrication All machines and mechanisms that have parts that slide one against another require lubrication to prevent wear, to carry away the heat produced by friction and to keep the surfaces clean.

Achieving Lubrication Lubrication is achieved by separating the surfaces with a film of oil or grease.

A pressurized system circulates oil throughout the engine.

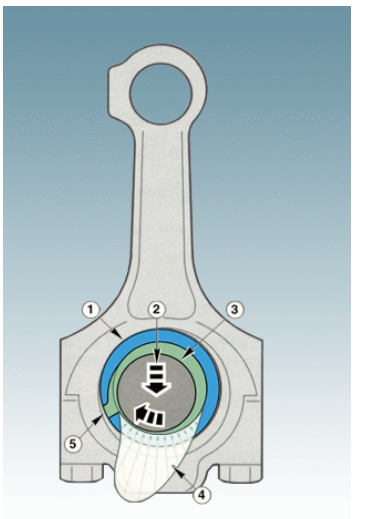

Big end lubrication

Functions of Lubricating Oil The lubricating oil in the engine has traditionally had three functions: separation, cooling and cleaning. Modern engines have to conform to environmental regulations and modern engine oils are an important component in helping to achieve this.

State the reason why lubrication is necessary.

Read the previous section again and note down some key bullet points here:

-
-
-
-
-

Lubricating Oils

Engine Oils Engine oil producers are responding with new blends, additives and synthetic oils to meet the needs of extended service intervals, improved wear protection, greater engine cleanliness, sludge inhibition, higher speeds and temperatures, and low oil consumption.

There are…

Several types…

Of engine oil

Oils and Exhaust Fumes These oils also contribute to improved performance and economy and environmental concerns for hydrocarbon emissions into the atmosphere. They are compatible with oil seal materials so that leakage is reduced. They also have strict limits on volatility so that vapors do not escape into the atmosphere.

Vehicle exhaust

Oil Types Early specifications for engine oils defined just the physical data. New oils, which have to meet environmental and engine performance requirements, are given specification code letters to indicate the performance level.

Viscosity index

Oil Composition The base for most engine oils is refined from crude oil to which is added viscosity index improvers, reduced friction improvers, anti-oxygenates, sludge, lacquer and corrosion inhibitors and cleaning agents for carbon, acids and water.

Most lubricants are made from crude oil

Synthetic and Semi-Synthetic Oils Synthetic and semi-synthetic oils have improved performance for environmental or special purposes.

Oil Viscosity 💻 All engine oils carry a specification for viscosity, which is defined as the resistance to flow. The viscosity rating is based on performance data found experimentally at 99°C (210°F) and given a number to represent the viscosity and at -18°C (0°F), which is defined by the suffix W added to the number. Oils carrying both viscosity ratings are termed multigrade oils.

Viscosity Ratings 💻 Low viscosity ratings are thin free-flowing oils and higher ratings progressively thicker and slower flowing.

Viscosity Index 💻 The viscosity index of an oil is a measure of the change in viscosity as the temperature rises.

High Index, Small Viscosity High index numbers indicate a small viscosity change on heating.

Multigrade Oils Multigrade oils have been developed in order to modify the viscosity index and give thin oils at low temperature that do not become excessively thin at higher temperatures.

Significant development has taken place

Oiliness and Lubrication Another important property of a lubricant is oiliness, which can be described as the ability to adhere to the surface of materials and maintain separation of the rubbing surfaces without breaking down. This type of lubrication is called boundary lubrication and occurs in all engines during starting and before the pumped oil feed is established.

Explain what is meant by viscosity and viscosity index.

Oil Lubrication Systems

Main Gallery The main gallery is a large drilling inside the engine block. Open ends are sealed with threaded plugs during manufacture. The main gallery is the distribution center for oil supply to the crankshaft main bearings and the overhead camshaft in the cylinder head.

Cleaning the Main Gallery The main gallery can be accessed for cleaning by removal of the threaded plugs in the ends of the drilling. Always wash through the gallery and oil drillings after any machining of the engine block or crankshaft or when heavy oil sludge has been deposited in the engine oilways. A sealing compound is used on the main gallery plug threads and the correct type can be found by reference to the manufacturer's data.

All parts of the lube system should be clean

Oil Drillings in Engine Block and Cylinder Head The engine block and cylinder head are machined during manufacture with interconnecting drillings that distribute oil to all moving parts in the engine. The diameters of the drillings and the use of restrictors control the flow of oil to different areas and components of the engine.

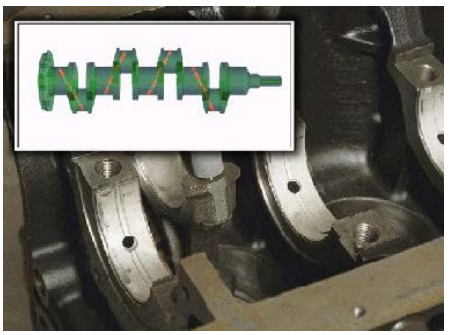

Drillings in the block and crank

Oil Drillings in the Crankshaft Oil enters the crankshaft bearings through drillings in the engine block and holes in the bearings. Radial grooves in the bearings allow a free flow of oil around the journal and bearing so that it can enter drillings in the crankshaft that connect to the big-end bearings. In this way, all the crankshaft bearings receive a plentiful supply of oil.

Oil Drillings in the Connecting Rods Connecting rods and big-end bearings are drilled in order to supply a jet of oil onto the cylinder wall. The jet is controlled so that it sprays the thrust face of the cylinder. This is achieved by using a shell bearing that does not have a radial groove, so that it is the alignment of the drillings that allows the spray to be made.

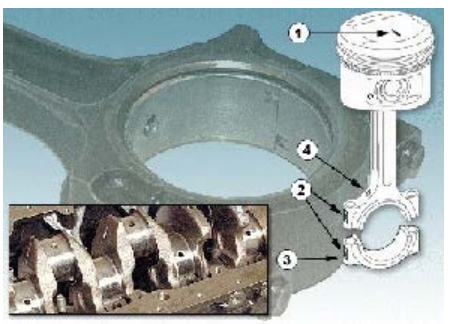

Con rod lubrication

Oil Control Rings Oil control rings on the piston scrape the bulk of the cylinder wall oil back through the piston and over the piston pin before return to the oil pan.

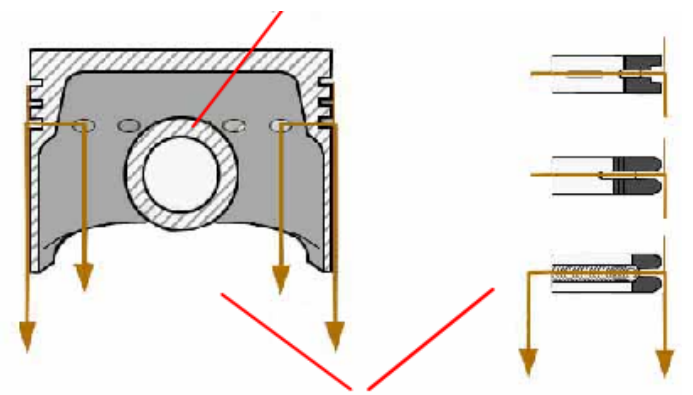

Piston lubrication

Piston Crown Cooling Where piston crown cooling is necessary, a spray to the under side of the piston can be made by a drilling, running the length of the connecting rod or by a spray jet located at the base of the cylinder.

Camshaft Bearing and Lobe Lubrication Overhead-valve engines have a camshaft fitted in the side of the cylinder block. The bearings are lubricated with a direct oil feed from the main gallery or from the main bearings.

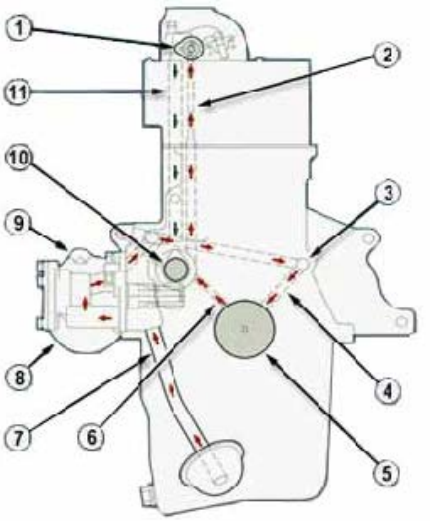

Direct oil feeds

Camshaft Bearing and Lobe Lubrication Overhead camshafts receive a direct feed from the main gallery through a vertical drilling in the engine block and cylinder head.

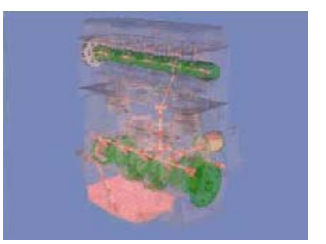
OHC lubrication

Overhead Valves The oil supplies all camshaft bearings and a spray to the valve tappets, rockers and valve stems.

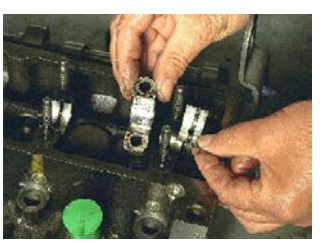
Cam bearings

Valve Gear Lubrication Overhead valve engines having a side camshaft and rocker shaft in the cylinder head have a drilling into one of the rocker shaft pillars, which supplies oil to a hollow rocker shaft. The ends of the shaft are sealed with threaded or pressed in plugs.

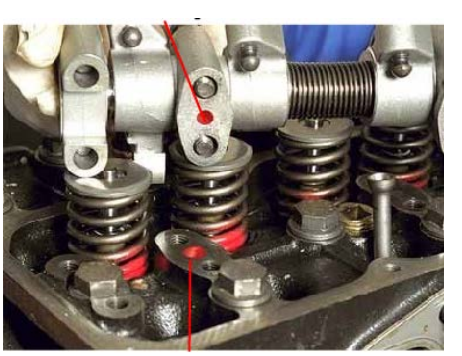
Oil drillings for the valve gear

Rockers Each rocker is supplied on the rocker bearing faces by oil that flows from the hollow shaft through holes drilled at appropriate places. Oil flows over the rockers to lubricate the valve stems and the push rod ends.

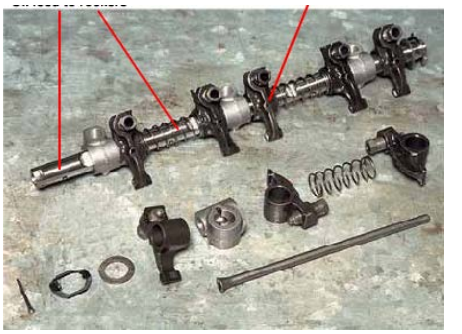

Oil feed to the rockers

Oil Flow to Oil Pan The oil returning to the oil pan passes down the push rod tubes and lubricates the cam followers and cams on its way. An oil spray from the front camshaft bearing lubricates the timing chain and sprockets.

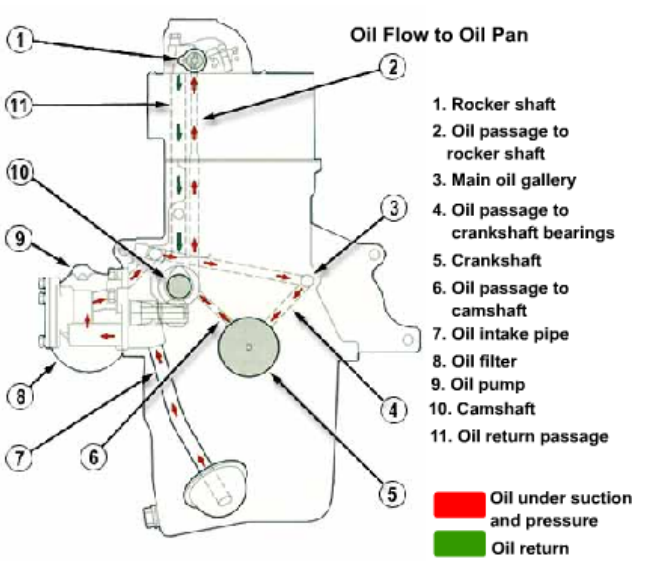

Return flow to the oil pan[1]

Return to Oil Pan The oil returning to the oil pan is directed through openings in the cylinder head and engine block so that it can provide an oil film for cleaning and protection of components. It is directed away from the shaft seals by throwers on the shafts and directed away from the crankcase ventilator (PSV) by suitably placed baffles and oil traps.

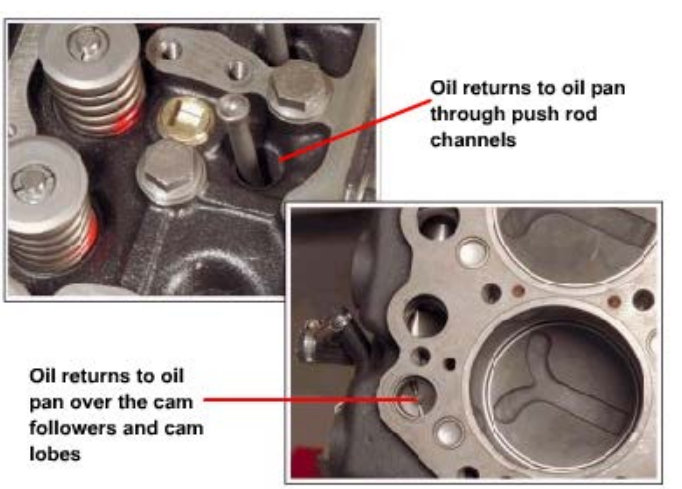

Oil return routs

Name THREE types of oil pump and ONE advantage of each.

.

Lubrication System Operation

Oil Feed A good flow of oil from a pump provides a force-feed into the shaft bearings. The large quantity of oil in the bearing generates an oil wedge that maintains separation under the severe conditions during the combustion stroke.

Force-Feed System The force-feed system is efficient for the removal of heat and for cleaning by carrying dirt to the filter.

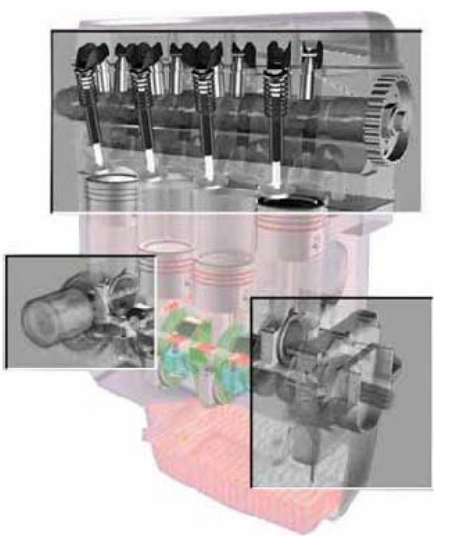

Force feed is a common system

Drillings and Oilways Oil is fed through the engine via drillings and oilways, and returns to the oil pan to carry heat away. The filter cleans the oil. The oil pump takes the oil from the oil pan and feeds it through the filter.

Full-Flow Force-Feed System Modern engines have all of the oil flowing through a filter before entering the oil circuit of the engine. This circuit is known as the full-flow system. The full-flow force-feed system provides oil under pressure to critical components.

Full flow filter

Component Lubrication Other components are lubricated by splash from jets of oil or by the flow of oil from the top of the engine back to the oil pan.

Engine Oil Specification Modern engine oil specifications are based on SAE (Society of Automotive Engineers) viscosity ratings, API (American Petroleum Institute) service ratings and other properties defined by classifications by other organizations such as ACEA (Association des Constructeurs Europeans d'Automobiles) and the earlier CCMC (Comite des Constructeurs d'Automobile du Marche Commun) for European vehicles.

Common specifications (SAE is now almost universal)

Viscosity and Temperature Manufacturer's recommended viscosity ratings generally reflect the lowest temperature at which the vehicle is being used and may be different for summer and winter use. The viscosity rating is not an indicator of oil quality but of oil flow under particular conditions. There are some low-grade oils that carry recommendations that limit the use of the vehicle particularly for high engine speeds, heavy loads and long journeys. Good quality oils will be labeled with at least the API and ACEAC service ratings.

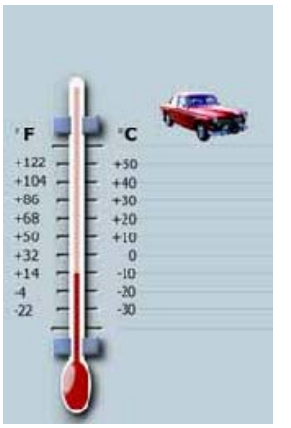

Oil must operate at a range of temperatures

API Service Ratings The API service rating classification is based on oil performance characteristics and consists of two letters. The first letter is either 'S' for spark ignition or gasoline engines or 'C' for compression ignition or diesel engines. Originally 'S' stood for 'Service' as in Service Station and 'C' for Commercial vehicles. The increase in diesel engine usage in light vehicles has bought about the change of meaning. The second letter in the classification denotes the service specification, which has been updated at significant intervals and reflects the greater performance requirements of newer type engines.

Older rating system

Oil Grade Classification The lowest grade is SC/CC, which was a suitable oil for engines produced during the 1960s. As the manufacturing and environmental demands have developed during recent years, improved oil performance has followed. SD and SE classifications cover the 1970s and SF and SG the 1980s. This development will continue with the introduction of newer classifications. As a general rule, a later classification can be used in place of the earlier type, but not the other way round.

Significant developments have taken place…

Over the years[2]

Diesel Engine Oils Diesel engine requirements are not exactly the same as for gasoline engines. Separate diesel engine oils are formulated and marketed and should be used in preference to gasoline engine oils that carry a C classification. Development of C-class oils has been slower than the S class. Turbo charging of diesel engines is now common and these must use the appropriate grade of oil. Recent grades are CD and CE.

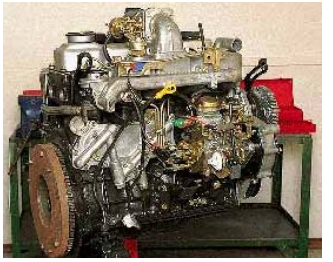
Diesel engine

ACEA Classification The ACEA classifications are in three groups. Group A covers gasoline engines; group B, passenger car diesel engines; and Group C, commercial vehicle diesel engines. The development of these classifications was carried out to meet the needs of European vehicles, which have different characteristics than the American engines that are used to set the API standards.

ACEA

Older rating system

Oil Grades Most engine and vehicle manufacturers list the SAE, API and other classifications for engine oil for their vehicles. They frequently list oil producer preferences, which give an indication of the cooperation of oil producers in the design and development of the engine. Some manufacturer's produce their own oils formulated specifically for their vehicles.

Always check that the correct oils is used

Gasoline and Two-Stroke Oils Engine oils are not normally biodegradable and should not be allowed to enter the environment either as vapor or liquid. Total-loss lubrication systems used on small two-stroke engines, such as those on motor cycles and outboard motors, use a mixture of gasoline and specially formulated biodegradable oil. Other types of oil should not be used.

Force-Feed Full-Flow Oil Circulation The majority of engines use a force-feed full-flow oil circulation and distribution system. These have a wet oil pan, and oil is pumped to all parts of the engine by means of a rotary positive-displacement pump. The oil is filtered before it enters the main gallery for distribution around the engine.

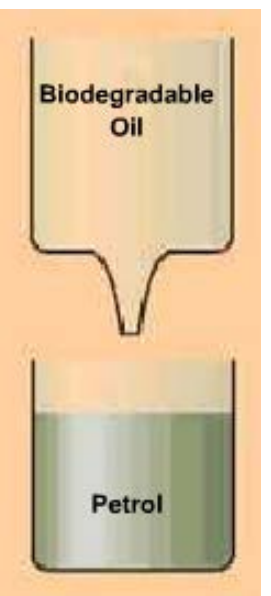

Oil mixed with the gasoline

Dry Oil Pan, Dry Sump System There are a few exceptions, such as some high performance engines, where a dry oil pan or dry sump system is used

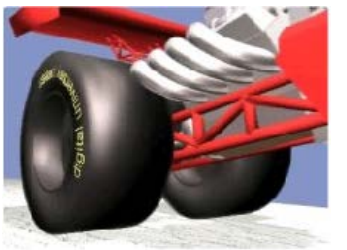

High performance…

Force-Feed Pump The force-feed is provided by a pump driven by the crankshaft or camshaft. A number of different pump designs are used, but all have positive displacement. These have rotating components that sweep past inlet and outlet ports and form chambers that increase in volume, carry oil and then decrease in volume in order to pump and pressurize the oil.

Oil Pressure at Low Engine Speed The oil pressure is controlled so that a sufficient supply is given at low engine speeds. This means that at higher engine speeds there would be excess pressure and oil flow, but this is relieved by a pressure relief valve that returns the excess to the oil pan or to the inlet side of the oil pump.

The Engine Lubrication System This diagram shows the components of this engine lubrication system. Look closely at the names and detail of these components before moving on to the next screens where they are shown individually with information on function and construction detail.

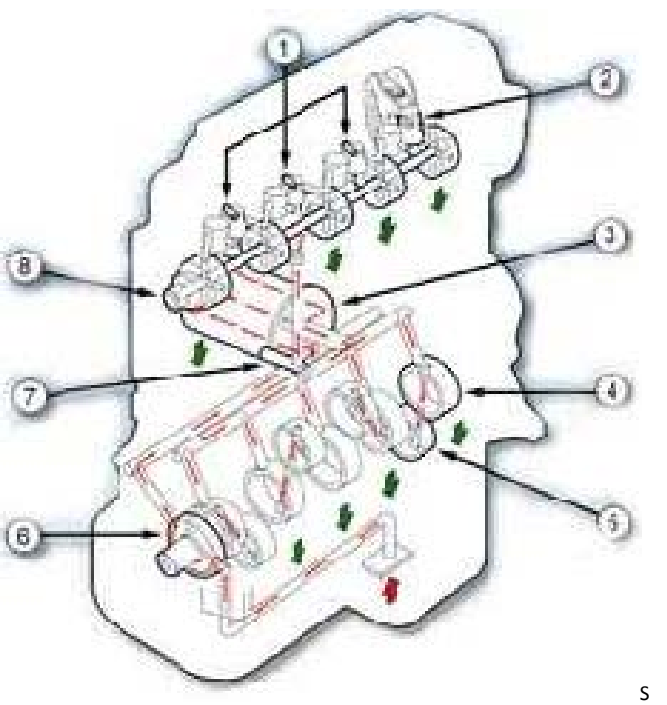

S

ystem components

Oil Pan The oil pan sits below the engine and holds the main supply of engine oil. Baffles are fitted in the oil pan to prevent oil surges, which could give temporary loss of oil feed. Oil pans are made from pressed steel or cast aluminum. A reinforced boss is drilled and threaded for the drain plug.

Removing the sump pan

Pick-Up Pipe and Strainer This connects the oil pump to the oil supply in the oil pan. A fine mesh strainer is fitted to the supply end of the pipe in order to filter large particles of carbon and dirt in the oil from entering the pump. Pick-up pipes are connected either directly to the oil pump or to the engine block in line with a drilling that feeds the pump. A good airtight seal is required at the connection. Two methods are used: a flange and gasket or an 'O' ring on the pipe for sealing and a bracket and bolt for securing.

Strainer

Make a simple sketch to show the main components of an engine lubrication system.

Oil Pumps and Filtration

Oil Pumps and Drive Arrangement The oil pump is the heart of the system. It pumps oil from the oil pan into the engine. The main types of oil pumps are gear, rotor, gerotor, vane and crescent.

Gear Type The gear type uses two gears in mesh with each other. Drive is made to one gear, which drives the other. The housing has a figure-8 internal shape with one gear in each end. Ports are machined in the housing and align with the areas where the teeth run into and out of mesh.

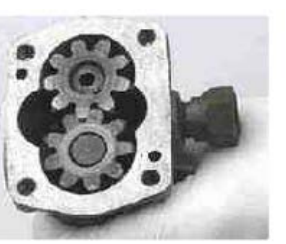
Double gear oil pump

Oil Flow in Oil Pump As the teeth separate, the volume in the inlet side of the housing increases and atmospheric pressure in the oil pan is able to force oil into the pump. The oil is carried around inside the pump in between the teeth and the side of the housing. When the teeth come back into mesh the volume in the outlet side of the housing is reduced and the pressure rises, forcing the oil out into the engine.

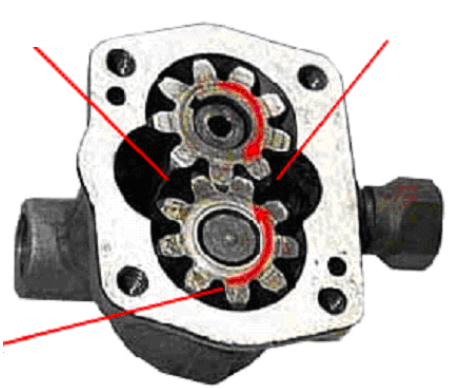
Pump features

Rotor-Type Pumps The rotor-type pump uses the same principle of meshing but with an inner rotor with externally formed lobes that mesh with corresponding internal profiles on the inside of an external rotor. The inner rotor is offset from the center of the pump and the outer rotor is circular and concentric with the pump body. As the rotors rotate, the lobes mesh to give the outlet pressure of the oil supply, or they come out of mesh for the intake of oil from the pan.

Rotor pump

Gerotor Pump The gerotor (gear rotor pump) is a variation on the smaller rotor pump. The gerotor pump is usually fitted around and driven by the crankshaft. They are inner and outer rotors, with the inner rotor externally lobed and offset from the internally lobed outer rotor. During rotation the pumping and carrying chambers are formed by the relative positions of the lobes.

Variation on the rotor pump

Crescent Pump The crescent pump is named after the solid block in the gear body. This pump is a variation on the gear pump, and also uses gear teeth to create the pumping chambers and to carry oil from the inlet port to the outlet port of the pump.

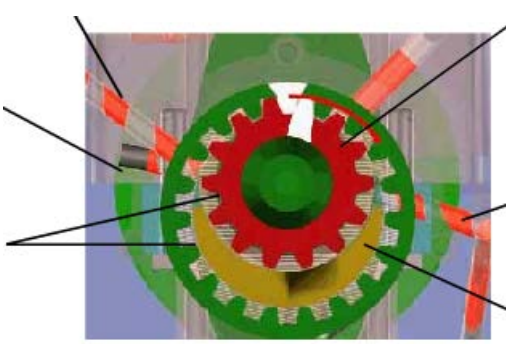

Pump features

Operation of Crescent Pump The operation of this pump is based on the meshing of the gear teeth and the positioning of the ports in the housing, which are aligned at each end of the crescent where the teeth move in and out of mesh. Oil is carried from the inlet port to the outlet port in the spaces between the teeth and the crescent. This pump is used for engine lubrication and for automatic transmissions.

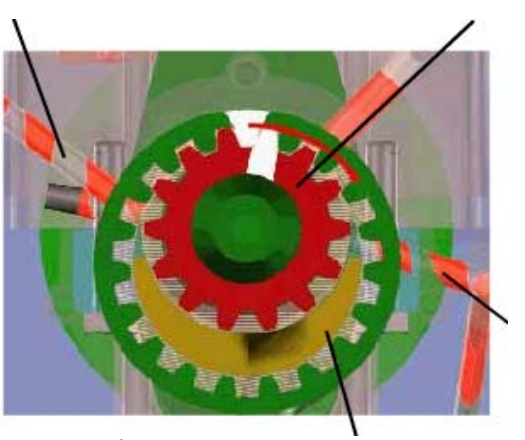

Pump operation

Vane-Type Pump The vane-type pump uses an eccentric rotor, and vane plates set at right angles to the axis of the rotor and set in slots in the rotor. As the rotor rotates, the vanes sweep around inside the pump housing and the pump chambers increase in volume as the vanes move away from the housing walls and reduce in volume as the vanes approach the walls. Oil is carried between the vanes and the pump housing from the inlet port to the outlet port.

Oil is carried between the vanes

Camshaft Drive Arrangements Oil pumps are driven from the camshaft by gears on the camshaft and oil pump spindle. The drive gear is often also used to drive the distributor for the ignition system.

Oil pumps can be cam driven

Another camshaft drive arrangement is a direct drive from the end of the shaft. Some engines have used an auxiliary shaft to drive the pump and distributor, which has been driven from the crankshaft by a toothed belt or chain.

Direct Drive Oil Pump Some modern engines are now using the crankshaft to give a direct drive to the oil pump. These pumps are of the gerotor or crescent design, and sit around the front of the crankshaft.
This arrangement is used on many overhead-camshaft engines, as it provides a low position for the pump.

Some manufacturers also use gear drives from the crankshaft.

Pressure Relief Valve (or Release Valve) The oil flow and pressure at low engine speeds must be sufficient for all engine loads. Therefore, the performance of the pump is geared to low speeds. As the engine speed increases an excess of oil flow and pressure would occur. This would be detrimental to some engine components; therefore, the pressure must be relieved.

Plunger and spring

Pressure Relief Valve Functions The pressure relief valve is a spring-loaded conical or ball valve that opens when the pressure in the oil exceeds the spring force acting on the valve seat. When the valve opens, a return drilling is uncovered and the excess oil flows through this to return to the oil pan.

Oil Filter Modern filters are canister types and consist of a micro porous paper element in a thin steel cartridge. The paper element filters small particles of carbon and dirt that are picked up in the oil. Chemical actions by some of the oil additives help to separate water and acids that drain into the oil pan. These by-products of combustion are also restricted from passing through the filter and collecting on the feed side. Replacing the filter on a regular basis removes all of these unwanted contaminants.

Filter features

Oil Flow Through the Filter Oil flow through the filter is from the outside of the element to the inside and then onto the main gallery.

Filters screw onto a threaded sleeve in the filter housing. Sealing is made with a rubber 'O' ring.

Replaceable Element-Type Filter Traditionally, a replaceable element in a steel bowl was used. A similar method is being introduced on many of the latest engines. This reduces the amount of material being thrown away as oil canisters are rarely recycled. The element is similar to those in canister types, and is made from paper folded in segments to provide a round filter with a large surface area. The top and bottom of the filter are molded to circular plates, which provide sealing at each end so that oil is directed through the filter element from the outside to the inside and then into the main gallery.

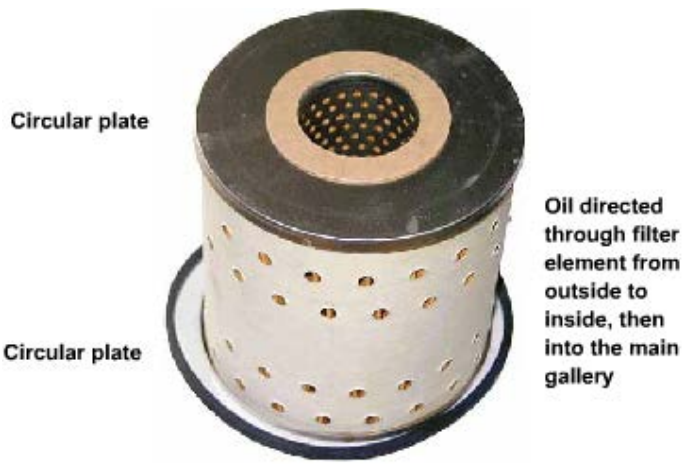

Simple filter

Replacing Element The element fits inside a pressed-steel or aluminum bowl, which is held in place by a through bolt. A plate and spring are fitted into the base of the bowl. The plate seals the lower end and the spring holds the filter in place against the housing sealing face.

Filter replacement

Filter Housing Seal Rubber rings seal the bowl. Where the bowl fits onto the filter housing, the rubber seal sits inside a groove cut into the housing. A small rubber washer and steel washer are used to seal the through bolt where it passes through the bowl.

This seal is very important

Oil-Filter Bypass Valve After a time, the oil filter element is filled with dirt particles and the flow of oil becomes restricted. Normally the filter is replaced before this happens, but if a blockage were to occur before replacement it would be possible to cut off the oil supply to the engine.

Bypass Valve Functions In order to prevent this from happening, a bypass valve is fitted into the cartridge filter base or the filter housing. The bypass valve works on the same principle as the pressure relief valve. A spring-loaded plunger, ball or plate sits against a seat and is lifted by oil pressure to allow the flow of oil through the engine to be maintained. The spring tension is slightly below the pressure-relief valve spring tension so that the normal operating pressure is retained.

Valve positions

Oil Flow Through Filter The resistance to flow through a clean filter element is less than through the bypass valve, so normal oil flow is through the element. When the filter is blocked and the bypass valve opens the oil is no longer being filtered, so dirty oil may enter the engine. Some manufacturers fit an electrical warning lamp circuit with a switch fitted to the bypass valve.

State the purpose of a bypass valve

Other Lubrication Components

Oil Cooler Circuit Two types of oil cooler are commonly used. One is an air radiator similar to an engine-cooling radiator with tubes and fins to transfer heat from the oil to the passing air stream. These are fitted next to the cooling-system radiator at the front of the vehicle. Pipes from the filter housing carry oil to and from the oil cooler radiator. These pipes have threaded union nut fittings at each end for removal and replacement. The oil cooler is usually held with nuts and bolts through flexible rubber mountings.

Oil cooler position

Oil-Level Indication Sensor and Dipstick The dipstick is the standard fitting on all engines to check the oil level. This is marked to show the maximum and minimum acceptable levels.

Check oil level with care

Oil-Level Indication Sensor Many modern engines are now fitted with an electronic sensor that provides information to the driver on the level of oil in the engine. These work either when the ignition is first turned on and when the oil level is stable before the engine starts or they provide a warning light under all operating conditions when the level falls below the minimum. The warning light or a gauge on the instrument panel indicates whether the oil level is within or outside of acceptable levels. The sensor is fitted into the oil pan or the engine block.

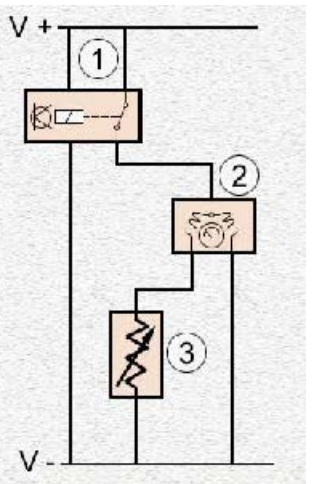

Basic sensor circuit1

Oil-Pressure Switch and Circuit A pressure-sensitive switch fitted into the main gallery makes electrical contact below about 7 psi or 0.5 bar. The switch is fitted in circuit with the oil warning lamp in the instrument panel and with a live feed from the ignition switch when the ignition is on.

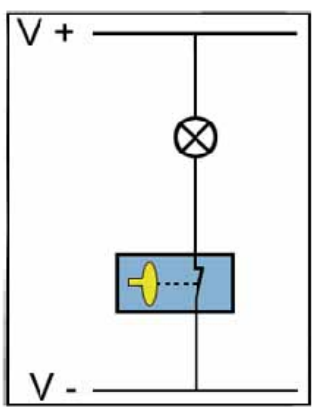

Warning light circuit1

Function of Oil-Pressure Switch When the switch contacts make a connection, the lamp illuminates. This should occur before the engine is started. Once the engine is running oil pressure builds up and the switch contacts should separate so the circuit is broken. The warning lamp should then go out. This indicates that a minimum oil pressure is being provided in the system.

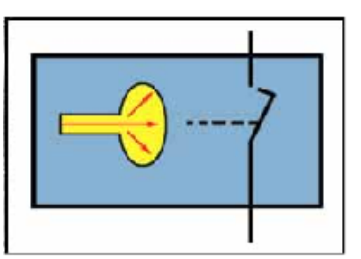

Pressure switch1

Oil Pressure Gauge Early oil pressure gauges use capillary tubes from the oil main gallery to a bourdon-tube type pressure gauge.

Modern gauges are electrical and use a piezo-resistive pressure sensor fitted into the main gallery and a stabilized voltage and bi-metallic or magnetic gauge unit.

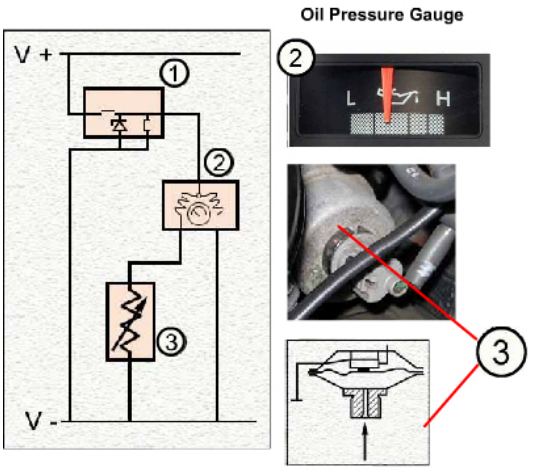

Gauge and circuit

Oil Seals and Gaskets These components can be classified either with the engine mechanical components or with the lubrication system. Oil seals are used to retain oil at the point where rotating shafts emerge from the engine block or cylinder head. Gaskets are used to seal between mating faces. Sealants are used with or in place of gaskets.

Gaskets and seals are important

Bypass Oil Filter System Many old type engines used a bypass oil filter circuit. In this system, the feed from the oil pump goes directly to the main gallery without being filtered. The return feed from the pressure relief valve goes to the filter and clean oil is returned to the oil pan. This system is not as effective as the full-flow system where all oil entering the main gallery is filtered.

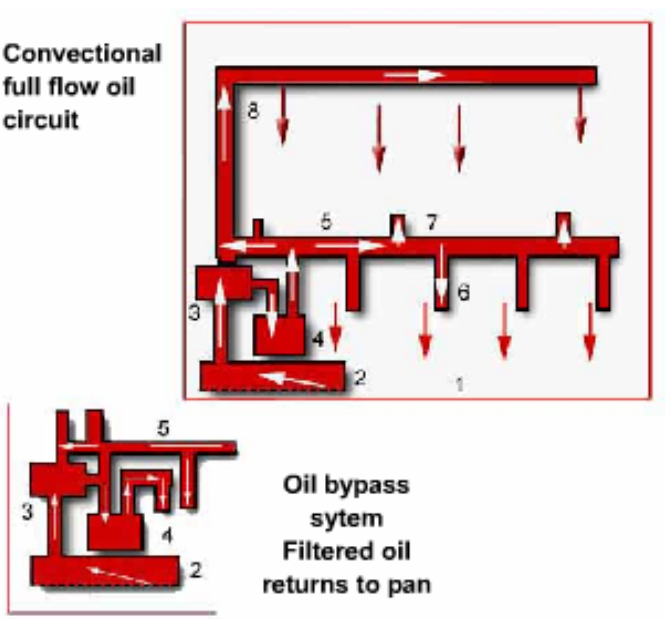

Dry Pan System For many high-performance applications a larger oil supply is needed so that engine heat can be removed by the engine oil as well as by the engine cooling system. A separate reservoir of oil is held in a remote tank and drawn into the main oil pump for distribution throughout the engine in the same way as a wet oil pan system. The oil returns to a small oil pan below the engine. A scavenge pump with a pick-up pipe in the oil pan draws oil out of the pan and delivers it back to the reservoir. An oil cooler is usually fitted in this return circuit.

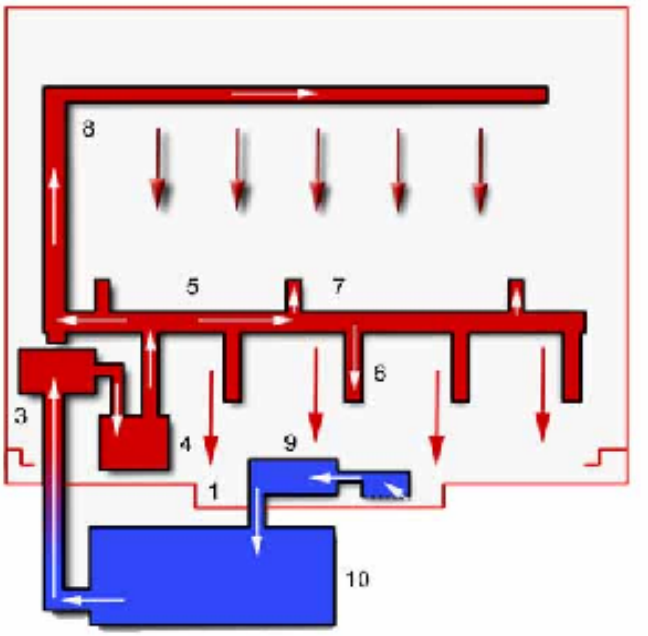

Dry oil pan

State the difference between a full flow and a bypass filtration system.

Cooling Introduction

Introduction The engine cooling system on a modern motor vehicle must help keep exhaust emissions to a minimum. During cold start and warm-up, the engine requires a rich mixture to run smoothly. Because a cold engine produces high levels of unwanted exhaust emissions, a rapid warm-up is needed to keep emissions to a minimum. The normal coolant temperature of a running engine is maintained at about 90°C. At this engine temperature, clean combustion is possible.

Air Cooling Some old engine designs used an air cooling system. Modern engines use water cooling because such a system is capable of providing the precise engine temperature control needed for exhaust emission regulations.

Air cooled system

Water cooled system

Bypass System Recent developments in coolant circulation give even closer control of engine temperature. This is accomplished by the mixing of cold and hot water as it enters the engine (rather than the cold fill of earlier systems). The old and new systems are covered in this learning program.

Ford engine…

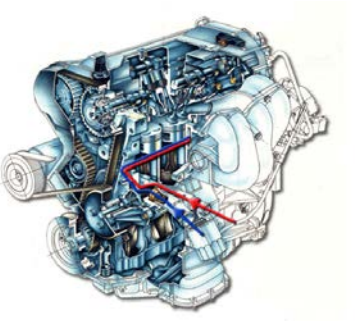
…showing coolant flow ports[1]

Function of the Cooling System The main function of the cooling system is to remove heat from the engine, particularly around the cylinder walls and the combustion chambers.

This should occur under all operating conditions, including the extremes of very hot weather, hard driving and operation in high altitudes.

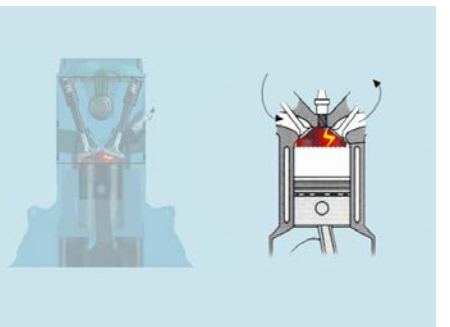
Engine cross section

Service Life Cooling system components must have a service life that is comparable with the engine mechanical components. However, some are subject to wear and natural deterioration and need to be replaced at scheduled service intervals.

Emissions Controlling emissions is an important aspect of the cooling system operation. This is achieved by controlling the upper cylinder and combustion chamber temperatures, resulting in efficient and clean combustion of the fuel. A further reduction in harmful exhaust emissions is achieved by keeping the warm-up time to a minimum.

Heating System The cooling system provides heat to the vehicle interior for the comfort and safety of the occupants.

In some cases, heating and/or cooling is provided for other engine systems such as the inlet manifold. An oil cooler for automatic transmission fluid may also form part of the cooling system.

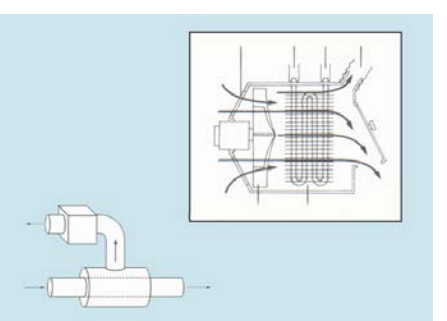
Water and air cooled heating systems

Coolant The coolant must be able to resist freezing and boiling. Contamination and corrosion to the engine and cooling system components must be kept to a minimum.

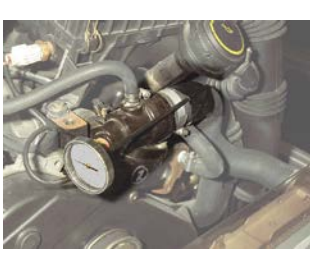
Temperature gauge fitted to test the cooling system

State the basic purpose of a cooling system.

Read the previous section again and note down some key bullet points here:

-
-
-
-
-

System Requirements

Heat Energy Heat is a form of energy that can be detected by a change in temperature. The engine uses chemical energy in the fuel. A combustion process converts the energy into heat and then into movement.

Energy Conversion The energy conversion process is not very efficient and only about 30 percent is converted into movement energy. Of the remaining heat up, to 50 percent goes out of the exhaust and the rest heats the engine. Excessive heating of the engine must be controlled in order to prevent damage.

Expansion Components expand with heat, and at high temperatures this expansion can cause seizure, and burning of pistons and valve seats. High temperatures also lead to rapid deterioration of the engine oil.

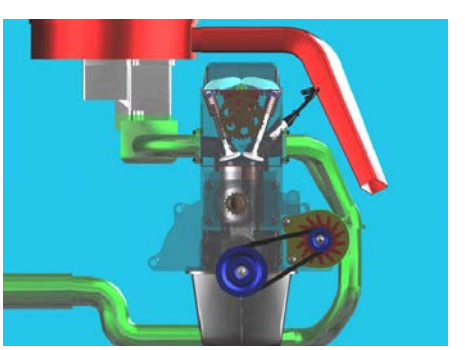

Engine components

Overheating A result of overheating is a change in the nature of the combustion process. The combustion time shortens, which, in turn, leads to a rapid rise in the pressure and force acting on the piston crown, connecting rod and crankshaft. A pinking sound may be heard, and premature failure of these components is likely. There is also an increase in temperature to a point where high levels of nitrogen oxides are produced. These are harmful in the environment.

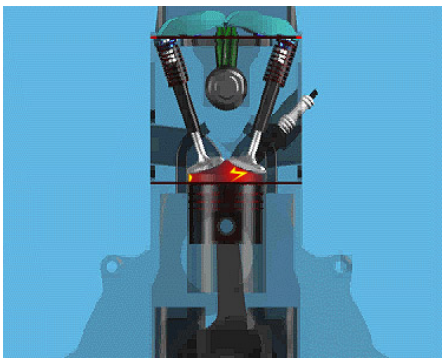
Forces acting on a piston

Cooling System Design Cooling systems are designed to maintain engines at an optimum temperature. This allows the design of components that expand on heating to form very good fits and running tolerances. The adjustment of ignition and fuel settings is matched to the optimum temperature in order to give clean and efficient combustion of fuel.

System components

Warm-Up Time Warming up to the optimum temperature as quickly as possible is important because it helps to reduce exhaust emissions. It also helps to prevent the formation of water particles in the combustion chamber and exhaust when the engine is cold. Any water that does not evaporate can enter the engine and contaminate the engine oil or remain in the exhaust system and cause premature corrosive damage.

Air or Liquid Cooling? Engine manufacturers have used two systems of engine cooling: an enclosed liquid cooling system and a direct-air cooling system. Air cooling systems are rarely used in modern vehicles.

Air cooling

Water cooling

Air Cooling Air-cooled systems have the air stream passing directly over the engine cylinders and cylinder heads to remove the heat at the source. Fins are cast into the cylinders and cylinder heads to increase the surface area of the components and therefore ensure that sufficient heat is lost.

Liquid Cooling Liquid cooling systems use a coolant to carry heat out of the engine and dissipate it to the passing air stream. The liquid coolant is contained in a closed system and is made to circulate almost continuously by the impeller on the water pump. Heat is collected in the engine and lost from the radiator to the passing air stream.

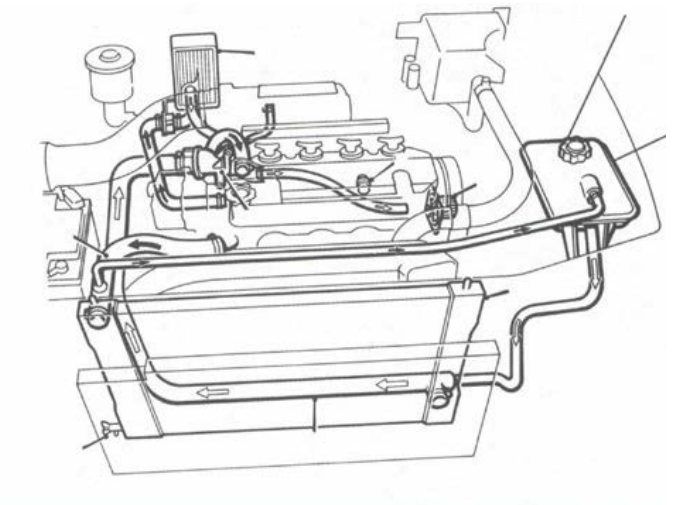

Liquid cooling system coolant flow

Explain why expansion of components must be controlled.

Read the previous section again and note down some key bullet points here:

-
-
-
-
-

Cooling Components Introduction

Cooling System In a liquid cooling system, the coolant carries heat from the engine to the radiator. Airflow through the radiator carries the heat into the atmosphere. Air is forced through the radiator by the forward movement of the vehicle or is assisted by a fan fitted behind the radiator.

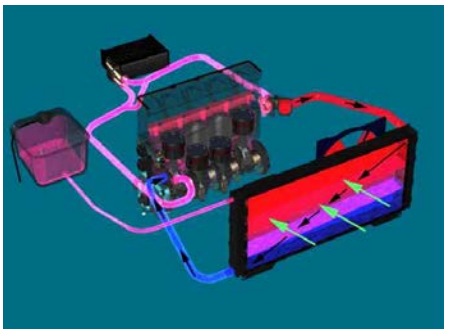

System layout

Cooling Fan The fan can be driven by an electric motor or by a belt from the crankshaft. Traditional engines had the fan mounted on the front of the water pump and a vee belt driving the fan and pump.

Fans

Fan Design A number of energy-saving fan designs have been used. These include variable pitch and viscous hub types. Vehicles that are regularly used for carrying loads or for towing may be fitted with secondary fans to improve cooling efficiency and prevent engine overheating.

Twin electric fans

In-Car Heating Some of the surplus heat from the cooling system is used for heating the passenger compartment. Pipes and hoses from the water jacket carry hot coolant to a heater radiator core fitted into the heater housing.

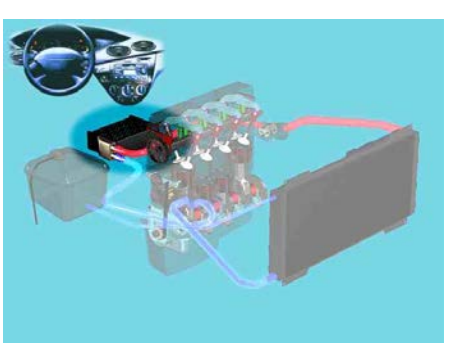

Heater system

Heater Controls Two methods of heat control are used. One uses a water valve to control coolant flow through the heater. The other, which has a continuous coolant flow, uses control flaps to mix hot and cold air in the heater housing.

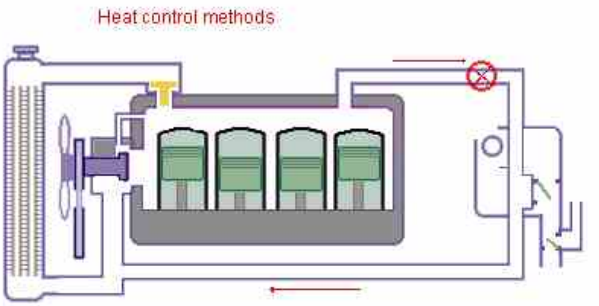

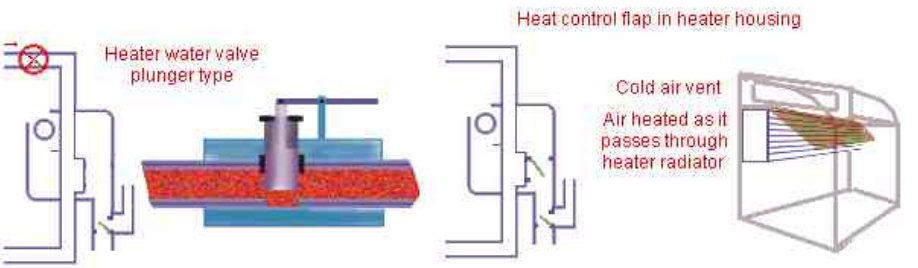

Heat control methods

Fresh Air Ducts Ducts into and out of the heater direct air to the windshield, side windows and throughout the passenger compartment. This is for defogging, defrosting and warming the passenger compartment. Control flaps in the heater direct the airflow to the ducts. Fresh air vents in the dashboard can direct either hot or cold air into the vehicle interior.

Heater air control flaps

Fresh air fascia vents

Manifold Heating Many engines use a heated inlet manifold that has a coolant flow from the engine water jacket running continuously through it. Immediately upon starting the engine, some heat is produced and this rises into the inlet manifold very quickly. The heat vaporizes the fuel in the air stream into the engine. This improves atomization and fuel distribution in the new air and fuel charge.

Inlet manifold

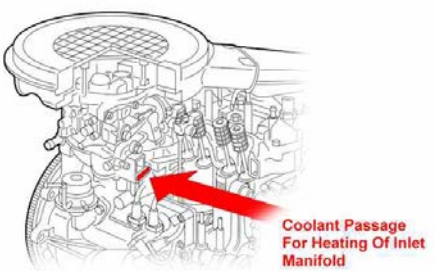

Coolant passage

Heat Exchanger To cool the engine oil and heat diesel fuel, heat exchangers are fitted into an adapter between the oil or diesel filter and the filter housing. A coolant supply may also be provided to exhaust gas turbo chargers to cool the spindle and bearings.

Fuel heater

Component Design Some of the cooling system and heater components have different designs. Many of these have been developed to improve the efficiency of the system or because of changes in vehicle design.

Cooling system parts

Describe the operation of a water cooled system car heater AND how the temperature is controlled.

Read the previous section again and note down some key bullet points here:

-
-
-
-
-

Cooling Components

Thermostat The modern thermostat uses a wax pellet in an enclosed cup. Inside the wax is a rubber sleeve enclosing a pin. The pin is connected to a plate that acts as the valve. All of these components are contained in the thermostat body together with a spring to hold the valve closed when the coolant is not hot. The thermostat body includes a flange for fitting into a housing in the coolant outlet from the cylinder head, or a radiator bypass channel.

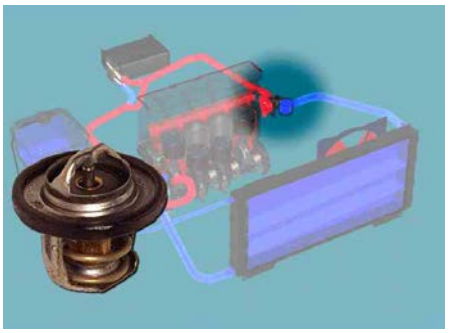

Thermostat positioning

"Wax Stat" When the temperature of the coolant acting on the wax pellet reaches the operating temperature, heat causes the wax to expand, press on the pin and force it out of the cup to open the valve. Coolant is then free to flow through the valve.

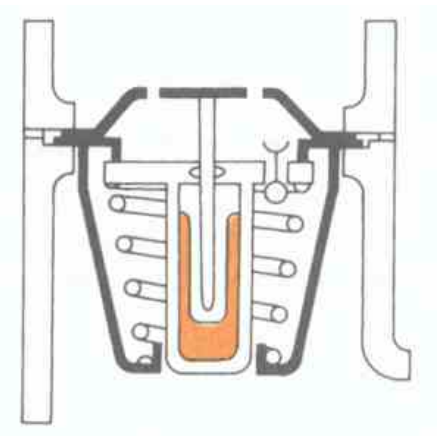

Thermostat closed

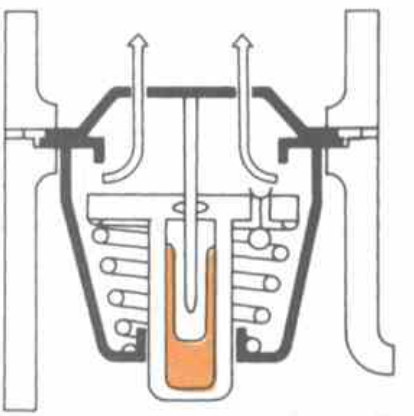

Thermostat open

Thermostat Fitting The wax pellet must always be fitted so that it sits on the hot side of the coolant flow through the thermostat.

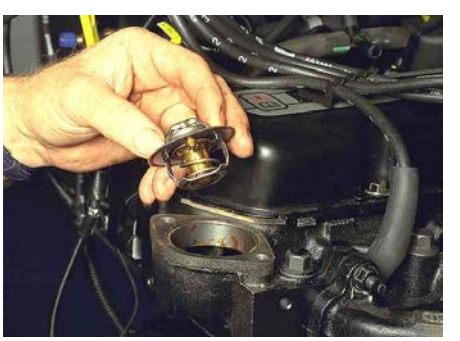

Thermostat with its wax pellet in the hot coolant area

Air Bleed Valve Some thermostat flanges are fitted with a small sub-valve to allow air to flow through the thermostat as the system is filled with coolant. This small valve must be fitted toward the top if the thermostat is fitted on its side.

Thermostats

Thermostat Position Some manufacturers have fitted the thermostat in the radiator top hose. The thermostat may also be fitted directly into its own housing and if so has to be replaced as a complete assembly.

Thermostat in cylinder head

Radiator Construction There are a number of different designs and manufacturing materials used for radiators. They all consist of a series of small tubes through which the coolant flows. Very thin sheets of metal form a large surface area around the small tubes. This large surface area makes radiators efficient heat exchangers for engine cooling purposes.

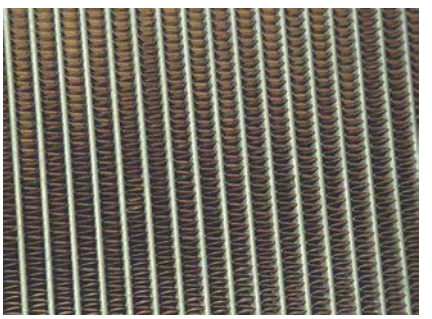
Radiator core construction

Radiator tubes

Radiator Types The radiator tubes are fitted to tanks at each end. These tanks are fitted with connections for the top and bottom hoses. The traditional radiator had the core tubes set vertically and the coolant flowing downward from the header tank to the bottom tank. The air space required for expansion of the coolant could be either in the header tank or in a separate expansion tank.

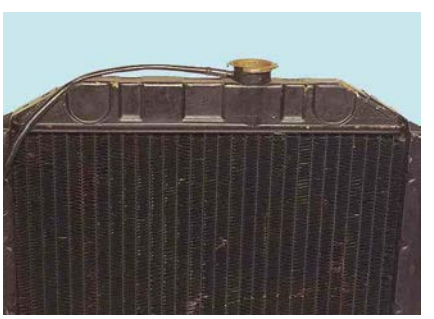
Traditional radiator

Cross flow radiator

Automatic Transmission Radiator If a vehicle is fitted with automatic transmission, an extra set of pipes running in the bottom radiator tank may be used to cool the transmission fluid.

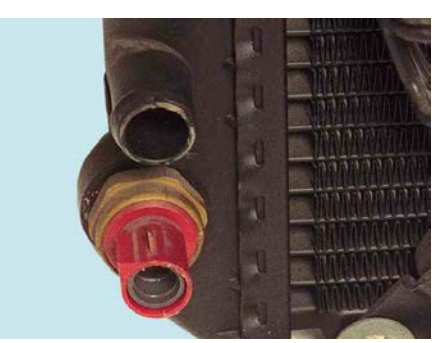
Extra cooling tubes in the radiator

Cross Flow Radiator With the lower frontal area of modern vehicles, a different radiator layout is needed. The cross-flow radiator has tubes and thin sheet fins forming the core. The core tubes run across the vehicle and the coolant flows from one side to the other. The tanks at each end of the radiator are joined to the core and have connections for the top and bottom hoses. Cross-flow radiators usually have a remote expansion tank where the pressure cap is fitted. Some cross-flow radiators have an integral expansion tank.

Cross flow radiator

Remote expansion tank

Radiator Developments Traditionally radiators were made from copper and brass and soldered together. Modern radiators are constructed from an aluminum core and nylon or plastic end tanks that are cinched together. This is a method of folding the edges of the radiator core ends over a sealing ring and a lip on the end tank. Aluminum radiators are lighter and cheaper to produce than radiators made from copper and brass.

Copper/brass soldered radiator

Aluminum and plastic radiator

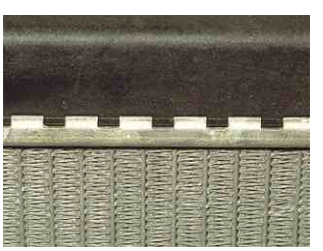
Sealing on aluminum radiator

Heater core

Pressure Cap The pressure cap was traditionally called the radiator cap because it was fitted to the radiator. On modern vehicles, the cap is fitted to the expansion or overflow tank. There are a number of designs and operating pressures. Many new vehicles are fitted with a plastic or nylon cap that is specific to one manufacturer.

Pressure caps – bayonet and screw types

Cap Operation The main parts of all pressure caps are the sealing ring, pressure valve, vacuum valve and a bayonet or screw fitting. The pressure valve consists of a spring-loaded seal that rests on a seat either in the filler neck or in the cap. The vacuum valve allows air to return to the system as it cools. It is fitted in the center of the pressure valve. Both the pressure valve and the vacuum valve are one-way valves and work in opposite directions. The pressure valve allows air out and the vacuum valve allows air in.

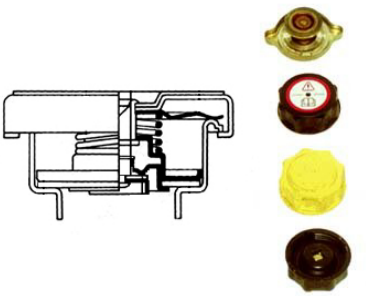

Radiator cap open…

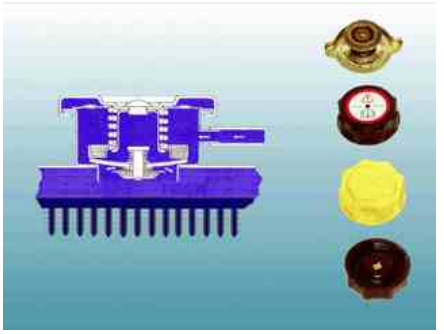

…and closed

Bayonet and Ring Cap Fittings Bayonet fitting pressure caps are tightened on a ring cam under the lip of the filler neck. A safety stop is provided to prevent the cap from coming off. For removal, the cap has to be pushed down and turned to pass the safety stops. The cap should be turned fully clockwise when fitting to ensure the correct tension on the pressure release spring of the valve.

Ring cam on bayonet cap

Water Pump The water pump is usually fitted into the water jacket of the cylinder block, although there have been some engines in which it has been fitted into the cylinder head. An external water pump is used on some engines and connected to the water jacket by pipes or hoses. The water pump is driven from the engine crankshaft by a belt.

Water pump in water jacket

External water pump

Pump Construction A spindle mounted on a bearing runs through the center of the water pump. . The bearing is pre-packed with grease and fitted with seals for retaining the grease and keeping the coolant in the engine. The drive pulley is fitted to the spindle on the outside of the pump.

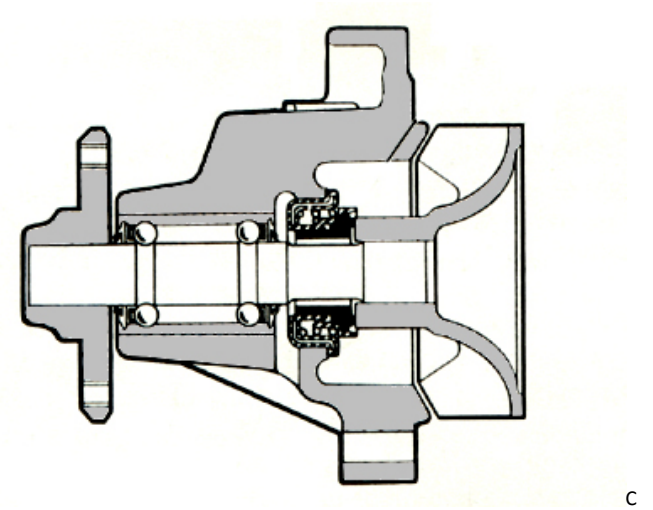

C

ross section of a water pump

Impeller The movement of the impeller creates a coolant flow through the water jacket. Water pumps are supplied as a replacement part fully assembled in a housing holding the bearing, spindle, impeller and drive flange for the pulley.

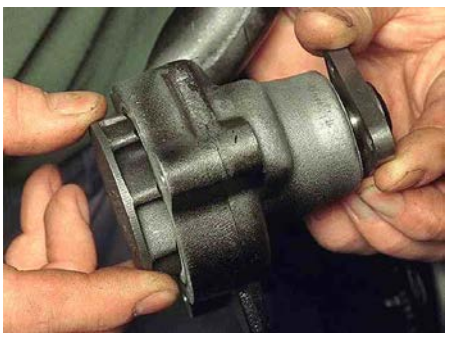

Water pump

Pump Drive Belts The drive components for the water pump usually consist of a vee belt that also drives the alternator and vee pulleys on the crankshaft and water pump. Multi-vee belts also are commonly used. The toothed camshaft drive belt drives some pumps. Adjustment of the belt is provided on the alternator mounting or by a separate tensioner.

Vee belt and pulley

Multi vee belt and pulley

Cooling Fan The fan is used to ensure an adequate airflow through the radiator when such airflow is not provided by the forward speed of the vehicle. The fan was traditionally fitted to the front of the water pump and attached with the same bolts as the drive belt pulley. Many longitudinal engines still use this system, but the fan, which used to be a pressed-steel component, now incorporates a thermostatic viscous hub and nylon fan blades.

Fan on the front of an old engine

Viscous fan hub on a modern engine

Viscous Coupling The viscous hub is a fluid clutch using silicon oil. The operation of the clutch is temperature controlled with a bimetallic valve. When the airflow temperature over the viscous hub is cool, the valve remains closed and the clutch is inoperative. When the airflow temperature over the viscous hub increases, the valve in the hub opens and the viscous fluid is driven outward by centrifugal force. The increased force in the fluid locks the plates in the hub together to engage the clutch drive to the fan.

Viscous fan hub

Electric Fan An alternative temperature sensing arrangement is for the fan to be driven by an electric motor mounted on a cowl frame attached to the radiator. A plastic fan is fitted to the motor spindle, which operates when a temperature-sensitive switch closes.

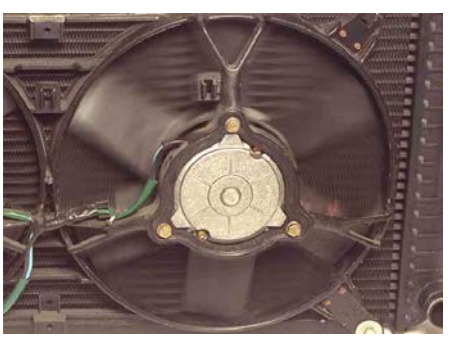

The electric fan operates…

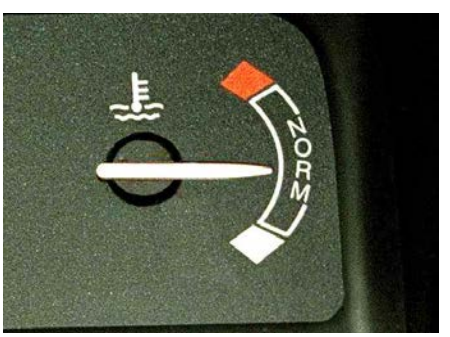

…at a set temperature

Fan Operation The supply for the electric fan is direct from the battery on some makes of vehicle and can run at any time with the ignition on or off. Other makes are connected into the ignition circuit. The electrical supply to the motor may be connected directly to the switch or be connected through a relay.

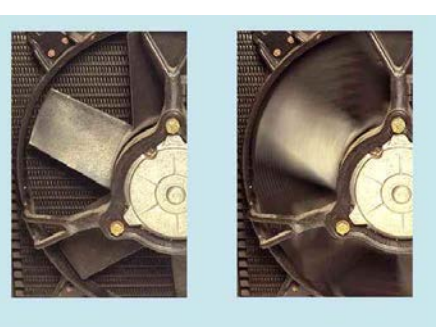

The fan may start at any time – take care

Twin-Speed Fans Some vehicles, particularly those that are fitted with air conditioning, may have two-speed fan circuits. These have a control circuit to switch the motor (or motors) to half speed at 95°C and full speed at 100°C. This system can be operated by the engine management system.

Two speed fan

Hoses and Clip Hoses are manufactured from fabric-reinforced rubber and are molded to suit the vehicle application. Connectors are cast or formed with a raised lip on the pipes leading into and out of other components. The hoses are held with round clips that can be drawn tight to give a watertight seal.

Hoses and connections

State TWO advantages of an electrically driven cooling fan.

Read the previous section again and note down some key bullet points here:

-
-
-
-

Cooling Components Operation

Coolant The coolant is a mixture of water and antifreeze. The antifreeze is needed because of the way in which water expands as it freezes. The force from that expansion is powerful enough to cause engine cylinder blocks and radiators to burst.

Antifreeze Suitable antifreeze is needed for the climate in which the vehicle is operated. Modern antifreeze formulations are also designed to give year-round protection by increasing the boiling point of the coolant for hot weather use.

A ntifreeze concentrate

Heat Transfer All three forms of heat transfer are used in the cooling system.

Convection occurs in the water jacket, creating internal coolant flows from the cylinder block to the cylinder head.

Conduction occurs through the cylinder and combustion chamber surfaces as heat passes to the coolant.

Radiation of heat occurs from the radiator and cooling fins when heat is passed to the atmosphere.

Heat can be transferred by…

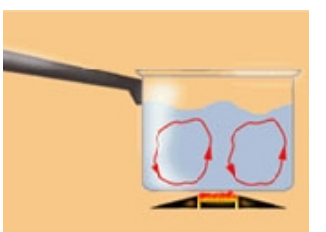
…convection

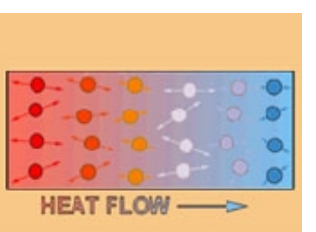

…conduction

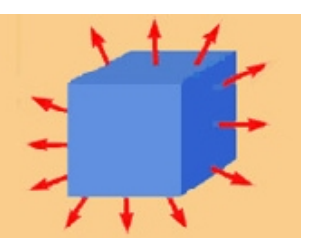
…and radiation

Rate of Heat Transfer The amount of heat transfer is dependent on four main factors:

The temperature difference between the engine and coolant.

The temperature difference between coolant and the air stream passing through the radiator.

The surface area of the radiator tubes and fins.

The rate of air and coolant flow through the radiator.

Components are designed for optimum performance

Thermostat Liquid cooling systems traditionally use a thermostat in the outlet to the top hose to control engine temperature.

A thermostat is a temperature-sensing valve that opens when the coolant is hot and closes as the coolant cools down. This allows hot coolant to flow from the engine to the radiator where it cools down and returns to the engine. The cooled coolant in the engine acts on the thermostat and it closes.

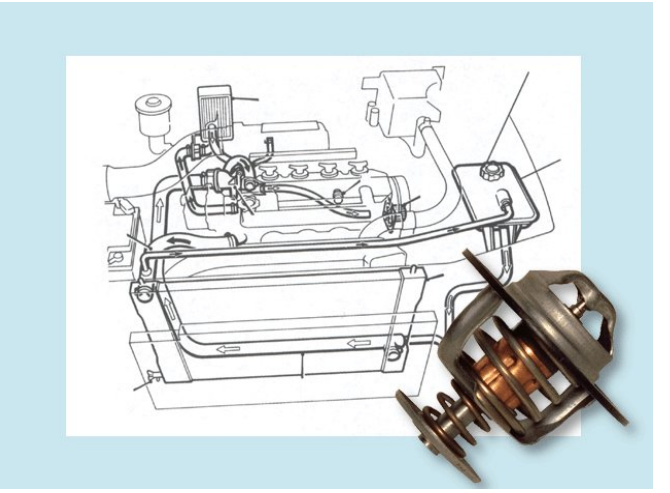

Cooling system and Thermostat

Coolant Flow The coolant re-heats in the engine. The thermostat opens and the cycle of hot coolant flow to the radiator and cool coolant returning to the engine starts again. Although this system provides a reasonably effective method of engine temperature control, it does produce a fluctuating temperature. However, a steady temperature is required for very clean and efficient combustion.

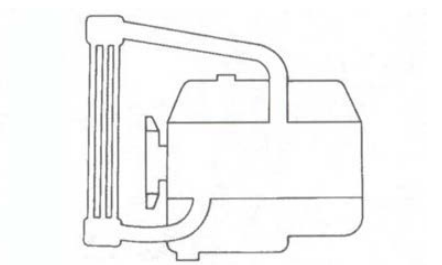

Ht and cold coolant flow

Bypass Mixing Cooling System Modern engine design is moving toward a system with the thermostat in the radiator bypass channel. When the thermostat opens it allows cold water from the radiator to mix with the hot water flow in the bypass, as it enters the water pump. This system provides a steady engine temperature and prevents the fluctuating temperature cycle of the earlier system. The modern system is shown here with arrows indicating the coolant flow.

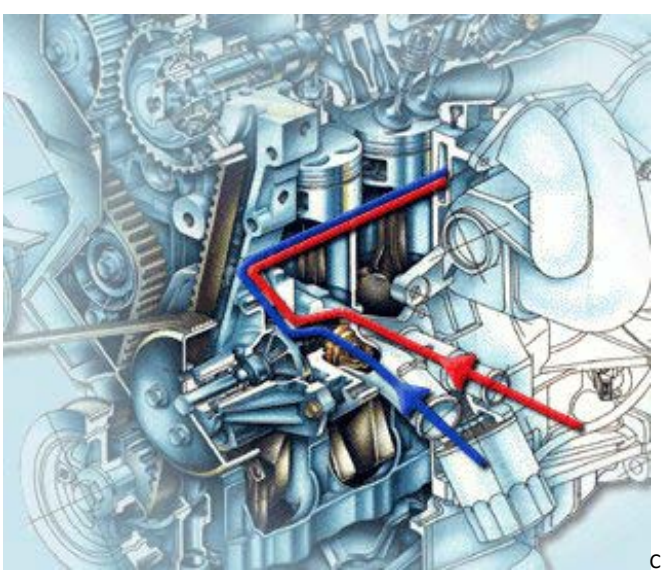

C oolant flow[1]

Heat Distribution The heat distribution within the engine needs to be controlled. The temperature around all cylinders and combustion chambers should be very similar. To achieve this, the heat removed by the cooling system has to be consistent for all areas of the engine. All modern engines have a fairly rapid coolant circulation within the engine so that an even temperature distribution occurs.

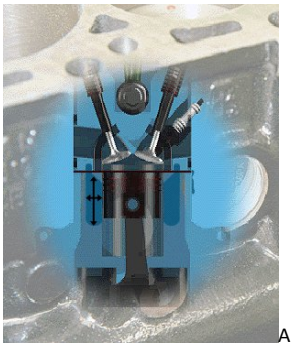
A water jacket

Water (Coolant) Pump The water (or coolant) pump draws the coolant through a radiator bypass channel when the engine is cool and from the radiator when the engine is hot. The impeller on the water pump drives the coolant into the engine coolant passages or water jacket. Careful design of the water jacket passages directs the coolant around the cylinders and upward over and around the combustion chambers.

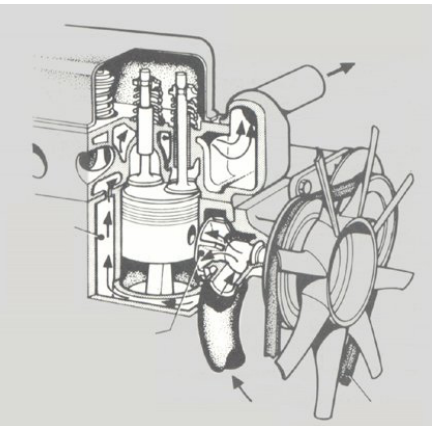
Water pump action

Coolant Density The density of coolant falls as it heats up, and as the temperature approaches the boiling point, bubbles begin to form. These bubbles can create areas in the water jacket where the coolant is at a lower density and the actual mass of coolant in that area is reduced. The reduced mass of coolant cannot be effectively heated in order to carry heat out of the engine.

Cavitation Another problem of poor heat transfer and lowered coolant density occurs when the rapid flow of coolant into and out of restrictions in the water jacket induces a phenomenon known as ”cavitation.” This results in localized drops in pressure and density in the coolant.

Heat Distribution The two causes of localized coolant density change – bubble formation and cavitation – can seriously affect the performance of the cooling system. This is because an even heat distribution around the cylinders and combustion chambers is not maintained.

Boiling water

Pressurized Cooling Systems To overcome these problems, all liquid cooling systems are pressurized. When hot, most modern systems have an operating pressure equivalent to about one atmosphere (1bar, or 100 kPa).

Expansion The pressure is obtained by restricting the loss of air above the coolant in a radiator header tank or an expansion tank. As coolant heats up, it expands. If the air above the coolant has less space to occupy and it cannot immediately escape, it increases in pressure.

Expansion tank

Radiator Pressure Cap A pressure-sensing valve in the radiator cap allows pressure that exceeds the system pressure to escape, but retains the operating pressure.

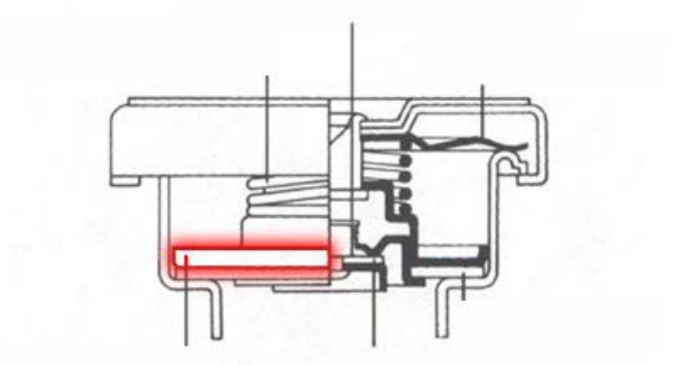

Radiator pressure cap details

Increased Coolant Density 💻 The pressure in the system acts on the coolant to increase the density, which would otherwise have fallen without the increase in pressure. This helps to reduce the risk of cavitation and to increase the boiling point of the coolant under pressure. The advantages are a more efficient cooling system with a higher safe operating temperature. It can also be used at high altitudes without the need for modification.

Pressure Cap Vacuum Valve As the engine cools down, the coolant contracts and the pressure drops. A vacuum valve in the pressure cap allows air to return to the system. This prevents depressurization below atmospheric pressure and the risk of inward collapse of components. An early sign of the failure of this valve to open is a top hose that has collapsed.

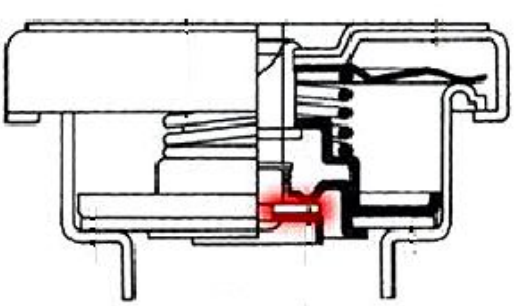

Vacuum release

Caution, Attention! 💻 The main danger from a pressurized cooling system is one of personal safety. If the coolant were not pressurized, it would be possible for the temperature to exceed the boiling point.

Cap Removal The risk of severe burns and scalds is highly likely if the pressure is suddenly released. Removing the pressure cap when the engine is hot can create the conditions for instantaneous boiling throughout the cooling system. A violent jet of steam and boiling water is likely to be ejected from the radiator or expansion tank.

Coolant may boil if pressure is released

Adding Water to a Hot Engine A similar jet of steam occurs when water is added to an overheated engine that is still very hot. Adding cold water or even hot water to a dry, hot engine can cause cracking in the cylinder block and cylinder head. Cracks can also be found in engines that have run dry of coolant and overheated in and around the combustion chambers and cylinder block.

Do NOT add coolant to a hot dry engine!!

Summary A cooling system is needed to prevent engine damage caused by overheating.

It also helps to reduce emissions by shortening the engine warm-up time.

Heat is used from the cooling system to operate the heater.

Name and state the purpose of FIVE main cooling system components.

Read the previous section again and note down some key bullet points here:

-
-
-

Antifreeze

Coolant The coolant is a mixture of water, antifreeze and inhibitors. The antifreeze is usually ethylene glycol, which needs inhibitors to prevent corrosion and foaming. These inhibitors have a life span of about two years, which means that the coolant should be changed every two years. The coolant mixture must be selected to meet the manufacturer's specifications. Aluminum alloy engines are more prone to corrosion than cast iron engines.

Antifreeze

Antifreeze Antifreeze is mixed to a specified ratio with water. Many manufacturers specify a 50/50 mixture of water and antifreeze, which allows higher engine temperatures before the coolant boils and it prevents freezing.

A hydrometer is used for testing antifreeze percentage

Ethylene Glycol An ethylene glycol antifreeze solution has an added advantage. It forms a semi-solid wax solution prior to solidification, which allows any expanding ice crystals to move within the water passages.

Result of not fitting antifreeze

Frost Protection A 50/50 coolant mixture will increase the boiling point to 106° C (223° F) and provide protection down to -34°C (-30°F). For colder temperatures down to -65°C (-90°F), a maximum mixture of 65 percent ethylene glycol can be used. Higher concentrations begin to freeze at higher temperatures. Therefore, no more than 65 percent ethylene glycol should be used.

Antifreeze is essential here!

Hard Water Areas Many regions have "hard" water that contains calcium or chalk. This separates from the water when it is heated. Deposits can be made inside the water jacket or radiator where they can block small water passages. Frequent topping off with tap water in hard water areas should be avoided. In these areas, distilled water or water from outside of the area should be used.

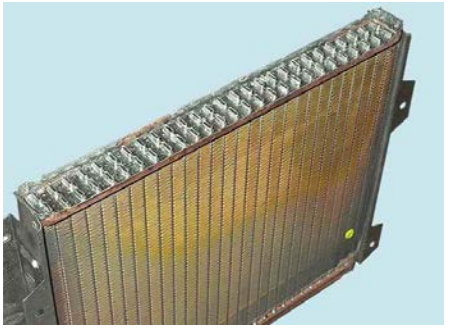
Radiator water passages

State TWO purposes of antifreeze.

State how the percentage of antifreeze in a vehicle is determined.

Read the previous section again and note down some key bullet points here:

-
-
-

Cooling Design

Water Jacket The water jacket is cast into the cylinder block and cylinder head. Casting sand is used to shape the inside or core of the casting for the water passages. The sand is removed after casting through a series of holes in the sides, ends and mating faces of the cylinder block and head.

Engine block with core plugs

Water Passages The holes in the sides and ends of the block and head are machined to provide accurate location for core plugs that complete the outside water tightness of the water jacket. The holes in the mating faces are aligned to allow coolant flow from the cylinder block to the cylinder head. These components are also machined for the fitting of the water pump and a water outlet to the radiator.

Core plugs and coolant holes

Coolant Flow The internal designs of the head and block vary to give different coolant flow patterns. An even flow to all areas of the engine is very important. The main areas where cooling is needed are around the combustion chambers and the upper cylinder walls.

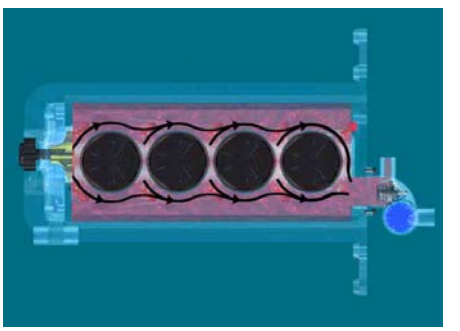

Coolant flow across the block

Cylinder Head The need for inlet ports, exhaust ports and valves makes cooling of these regions difficult. These areas are prone to cracks and other deterioration from overheating, freezing and the use of incorrect or old antifreeze solutions.

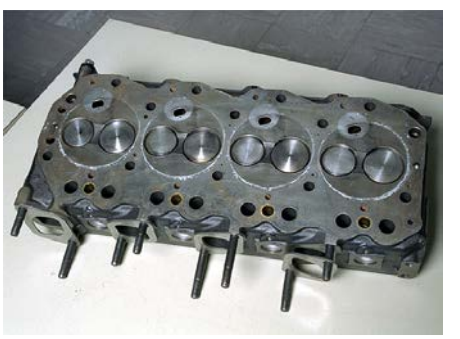

Cylinder head coolant passages

Describe THREE features of and engine that need particular attention to cooling during the design process.

Read the previous section again and note down some key bullet points here:

-
-
-

Service and repair

Routine Maintenance

Service Work Scheduled service requirements for the mechanical components on modern engines are limited to look-and-listen observations for security of components, for oil, coolant and gas leaks and for abnormal noises. These items have been covered in the preceding section dealing with engine mechanical performance. Other items of service work such as changing the engine oil and filter and replacing or adjusting components on other systems are covered in the appropriate learning programs.

Engine service work is simple but important

Service Intervals Older type engines with adjustable valve clearances usually specify checking and adjustment at major service intervals. Engines with toothed camshaft drive belts specify adjustment and condition checks at major service intervals and replacement at longer intervals. These checks and belt replacement intervals should be carefully followed.

Checking clearances

Incorrect Adjustment Incorrect adjustment by as little as 10 percent above or below the specified tension can reduce the belt life by as much as 90 percent. A tight belt can cause breakdown of the fabric structure of the belt and wear on the camshaft and tensioner bearings. The consequences of belt failure can include severe damage to inlet and exhaust valves and piston crowns when they smash together as the crankshaft and pistons run on and the camshaft and valves stop moving. Follow the vehicle manufacturer's service schedules for the work to be carried out.

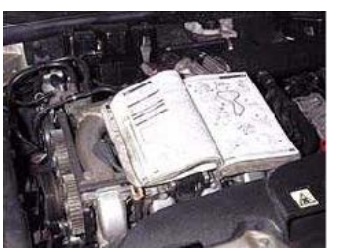

Follow the vehicle manufacturer's service schedules

Routine Maintenance Inspections, Lubrication and Replacement of Parts The routine maintenance items are mainly quick checks to ensure that the system is operating correctly and is likely to do so until time for the next service check. The detail of the checks has been covered in the checking system performance section. Any additional items that are specified in the service schedule should be carried out in accordance with the manufacturer's instructions.

Inspections

Correct Grade and Type of Oil In countries where extreme summer and winter temperature are experienced, different grades of oil are required for seasonal use. Failure to use the correct grade and type of oil for the season can lead to difficult starting and premature engine wear. Any faults found during service inspections should be reported to the customer or driver to obtain authority for repair of the fault.

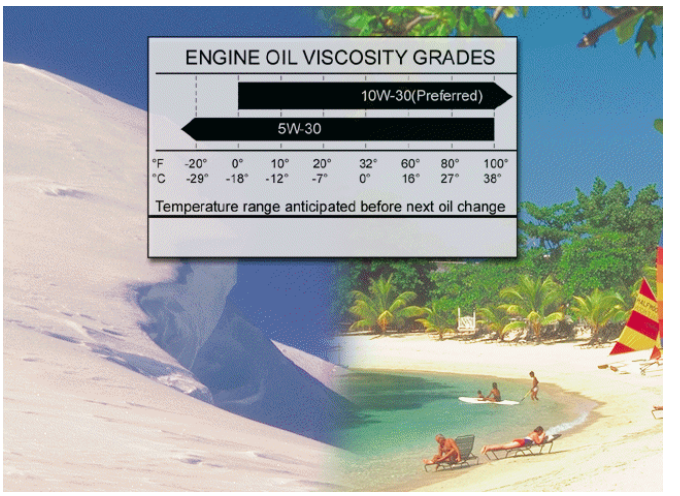

Use the correct oil

180. Worksheet Adjust Valve Clearances

Adjust valve clearances on OHV engine (not hydraulic). Adjust valve clearances on rocker arm type OHC engine

Using feeler gauges

Correct Valve Clearance Valve clearance is important for two reasons. The first is to ensure that the valve fully opens and is able to fully close in time for the four-stroke cycle. Valve clearance that is too wide will give late opening, early closing and the valve will not open fully. Valve clearance that is too tight or where there is no clearance will cause the valve to open early, close late and may not be fully closed.

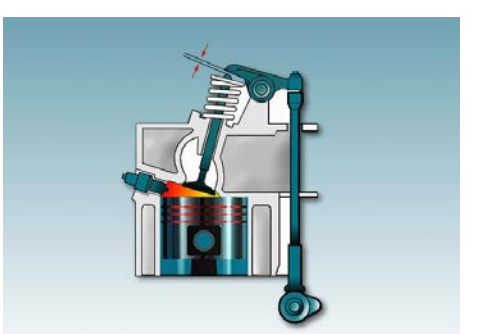
Clearance

Rapid Wear Failure to seat correctly will cause rapid wear from high exhaust gas temperatures acting on the valve head and valve seat.

Valves in position

Tight and Loose Valve Clearance The second reason for correct valve clearance is the requirement to maintain an oil film on the valve train components. Valve clearances that are too loose will allow the components to separate and come together with a hammering effect, which will break through the oil film. Where the clearances are too tight the oil film will not form. Both these situations will cause premature wear from a lack of correct lubrication.

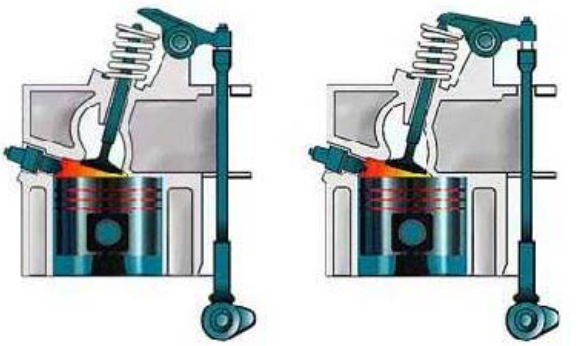

Valve clearances must be correct

Valve Clearance The symptoms of loose valve clearances are a tapping noise from the rocker cover and a slight loss of engine performance. Tight valve clearances cause misfire, uneven running and loss of performance.

Valve Clearance Dimensions Obtain from the manufacturer's workshop manual the specifications and checking conditions for the valve clearances. Inlet and exhaust valves often have a different clearance dimension. Some manufacturers specify that checks and adjustments are carried out when the engine is hot, some when the engine is cold and others hot and running.

Check data

Checking Valve Clearance For all types of adjustable clearances, follow the manufacturer's instructions in regard to the position of the engine when checking any individual valve.

OHV engine

Cam Position The check is usually carried out when the follower is on the back of the cam. To set this position (which cannot be seen directly) requires setting an opposite valve to a point where it can be seen, which is when a valve is fully open.

Adjusting Valve Clearance Remove the rocker cover, rotate the engine and observe the action of the valves as they open and close. Different sequences occur for different engine designs. Set an opposite valve to position and check the valve clearance with a feeler gauge. If the clearance is incorrect adjust by releasing the lock nut and turning the adjusting screw until the correct clearance is obtained. The ‘feel’ of the feeler gauge should show some resistance but still be free when pushed in and out in the gap.

Tappet Noise Continue to turn the engine to each valve position. Check and adjust the new valve if necessary until all of the valves have been checked. Then run through once more, recording that all valves are correctly adjusted. Make sure that inlet and exhaust valves are correctly adjusted to their own specification. Run the engine and listen for tappet noise and uneven running. If these are not heard, the adjustment is correct.

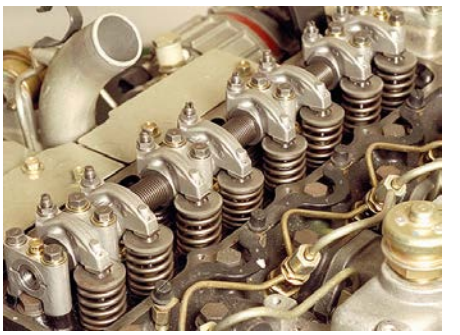
Valves and rockers

Dial Test Indicator On engines where wear between the rocker and the valve stem makes it difficult to obtain an accurate measurement with a feeler gauge, set up a dti (dial test indicator) to measure the movement of the rocker immediately above the clearance measurement position.

DTI in use

181. **Worksheet** Replace Camshaft Toothed Drive Belt

It is very important to follow the manufacturer's instructions for the replacement of a toothed camshaft drive belt.

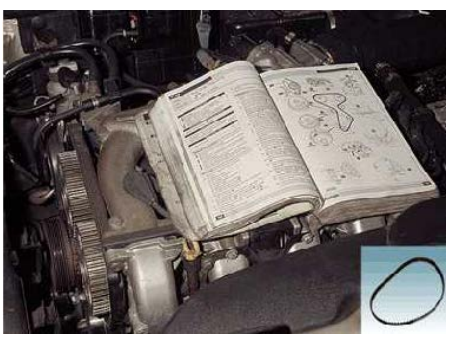
Check data

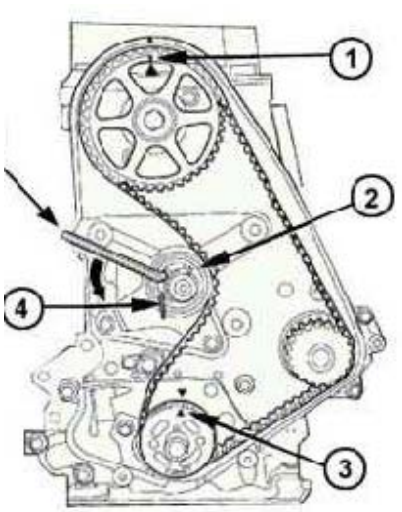

Cam belt[1]

Timing Marks The engine must be correctly timed so that the valve opening and closing and the ignition spark occur at the correct points in the four-stroke cycle. Marks are provided on the engine and the belt pulleys, which must be aligned before the belt tension is released and the belt removed. The engine must be brought up to the timing marks in the normal direction of rotation of the engine to avoid setting to ‘one tooth out’ on the slack side of the belt.

Cam Belt Replacement Other engines use dowels or plugs that have to be inserted through holes in the cam pulleys and into the engine. These hold all shafts in position during the belt change. Oil leaking onto camshaft drive belts will cause premature failure. Lip type oil seals are used on the camshaft and the crankshaft to retain oil in the engine. These are likely to leak at high engine mileage and should be replaced during a cam belt replacement task if they show signs of deterioration.

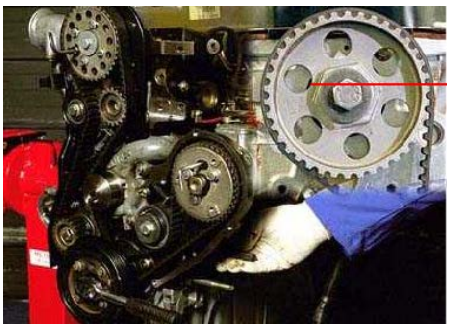

Timing belt

Drive Belts The direction of rotation of drive belts must be kept once they have been fitted. The internal structure of the belt reinforcing plies settle after running in. Reversing the direction of rotation will pull against this 'settled position' and tooth fracture is likely. Many belts are marked with arrows for the direction of rotation. If no marks are shown and the belt is to be reused, mark the belt before removal.

Direction arrow

Adjusting Belt Tension Adjustment of belt tension is specified by the engine manufacturer and will often require the use of a tension gauge. Always observe the checking conditions and procedure for this operation. When no instructions are available, a rule of thumb is to set the tension on the long side so that the belt can be twisted through 90°. When inspecting a belt for condition, look for signs of cracking between the teeth, for frays and perishing of the rubber and, if the belt has been removed, look for signs of twisting when the belt is held up.

Tensioner

Routine Maintenance and Customer Care Scheduled service requirements for the engine lubrication system overlap the engine mechanical inspections for oil leaks and the burning of oil, which is seen as blue smoke in the exhaust gas. Oil can leak because:

Gaskets, which seal the mating faces of covers, housing and the cylinder head are worn

Oil seals on the shafts are worn

Piston/piston rings and/or valve guides are worn, or a clogged PCV system forces oil into the combustion chamber when the crankcase pressure is high.

Inspecting, Cleaning and Replacing the Filter Inspection and cleaning or replacing the filter and oil separators of the crankcase ventilation system are important for oil sealing in the engine.

Components should be cleaned with care

Service Areas The main area of service work apart from the inspections is changing the engine oil and filter.

Oil Condition Looking at the condition of the oil will indicate the existence of problems that may be developing. Black oil can be caused by either a late oil change or could show early signs of piston blow by. Creamy or emulsified oil indicates the existence of water. Report any abnormality to the owner or driver of the vehicle.

Check the oil condition

High Oil Levels If the oil level is found to be high there is a possibility of dilution from gasoline or diesel draining into the oil pan by bypassing a piston from a leaking injector or carburetor valve.

High oil level may indicate another problem

Color and Body of Oil The body and color of old oil at a service interval should be inspected to look for the correct frequency of oil changes and for contamination from water, fuel or dirt particles.

Oil color is a useful indicator of engine condition

Replacing an Oil Filter Replace the oil and the filter at the specified intervals. The service interval is shortened for abnormal use conditions. Refer to the manufacturer's recommendations and discuss these as appropriate with the owner or driver of the vehicle.

Filter replacement

Oil Leaks Check for oil leaks at all possible places. These are at all gasket joints and from the seals on all shafts that extend from inside the engine to the outside. When the engine is running look at the exhaust for signs of blue smoke. This indicates the presence of oil being burnt during combustion.

Oil pan gasket

Smoking'!

Failure of the Crankcase Ventilation System Oil will bypass the pistons where the rings are badly worn and if the crankcase pressure is high due to a failure of the crankcase ventilation system. Oil may also be drawn into the inlet port from worn valve stems and guides and/or valve stem oil seals. Blip the throttle during exhaust smoke observations to see if there is any change during overrun.

Oil Pressure Test There will be occasions when an oil pressure test is advisable at a service interval. This is likely to be when an oil change is overdue or when sludging is found in the engine. Carry out the test after the oil has been changed to check for possible damage or continuing blockage.

Crankcase Ventilation Blockage A blockage in the crankcase ventilation system will cause failure in the operation of that system and give a high crankcase pressure. This can cause premature failure of the oil sealing components, so it is always recommended to check and clean the valves and restrictive orifices in the system at regular service intervals.

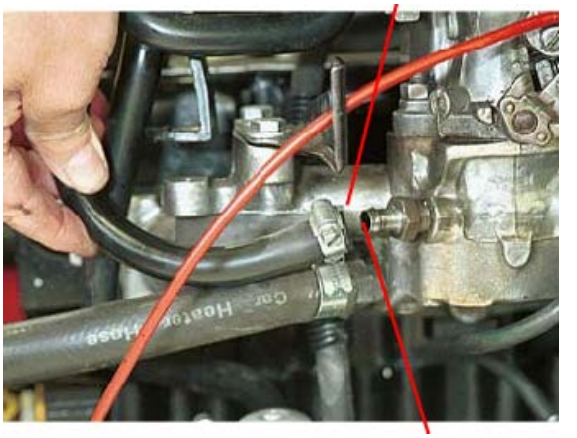

Replace Engine Oil and Filter Follow the procedure for draining and refilling the engine oil and for removing and replacing the oil filter. To select the correct type and quantity of oil, refer to the engine manufacturer's workshop manual or data sheets. Always use the oils formulated for gasoline or diesel engines, although most engine oils show both 'S' and 'C' API ratings.

Simple filter replacement

Replace Engine Oil and Filter Check the oil level and condition and run the engine to warm it up before draining the oil.

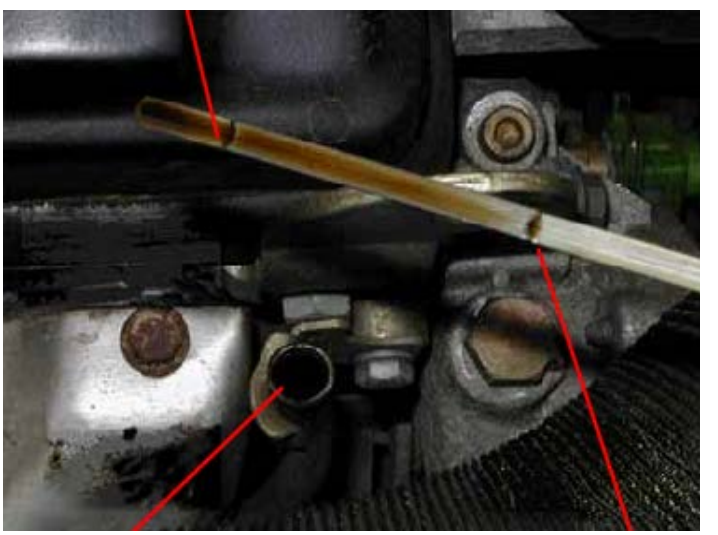

Using the Correct Filter Always check that the new filter is correct before fitting. Some canister-type filters have the filter blockage valve in the filter body. Where this type is used it cannot be interchanged with a canister of similar dimensions and fittings, but no valve.

Replacing 'O' Rings Always replace the 'O' rings on the canister or filter bowl. Where filter bowls are used, loosen the through bolt to remove the filter element. Hook out and replace the 'O' rings. Fit the filter, making sure that the base plate and spring are retained and finally twist the bowl on its seat to set the 'O' ring seal.

Use new 'O' rings

Replacing the Drain Plug Replace the drain plug with a new sealing washer and fill the engine with the specified quantity and quality of oil. Run the engine, checking for oil leakage as soon as the oil warning light goes out. Stop the engine to check the oil level.

New plug washer

Overfilling the Engine Do not overfill an engine because this can cause damage by reducing the crankcase air space, which then affects the ventilation system. Damage to engine components from hydraulic action can occur if the level is very high.

Overfilling can cause big problems

Routine Replacement The main cooling system item for routine replacement is the antifreeze and coolant. Rubber components such as hoses and drive belts are replaced if they begin to show signs of deterioration. A preventative maintenance program would include replacement of hoses and drive belts at, say, a three- or four-year- interval. Report any faults found during service operations to the owner or driver of the vehicle.

Hoses and antifreeze

182. **Worksheet** Routine maintenance inspections, lubrication and replacement of parts.

The routine maintenance items are mainly quick checks to ensure that the system is operating correctly and is likely to do so until the next scheduled service. Any additional items that are specified in the service schedule should be carried out in accordance with the manufacturer's instructions.

Pollen Filters On vehicles whose ventilation systems are fitted with pollen filters, the paper element should be changed at the specified mileage/kilometers, or more frequently in very dusty conditions. Replacing the coolant with a new water and antifreeze solution is covered by the next worksheet.

Use good quality filters

183. **Worksheet** Drain and top off coolant to prepare for fall/winter conditions.

Radiator being drained

There are two types of service schedule. Most types are based on mileage and time but some older schedules were based on seasonal requirements. The reasons for seasonal maintenance are still valid and can be used on top of mileage and time service schedules.

Seasonal Checks Cooling system maintenance should match the season. In the summer when hot weather is expected, it is important that the system is working efficiently and that checks for leakage and for coolant and airflow through the radiator are carried out. Any problems that are discovered should be reported to the customer, who can authorize you to replace any parts.

Winter Conditions During winter months, the risk from coolant freezing is high. Because water expands on freezing, adequate antifreeze strength is necessary to prevent damage to the engine and radiator.

Draining Coolant Drain the coolant into a clean drain tray and transfer it to a clean can or tank for disposal to an authorized site. The container should be marked to show the contents as antifreeze – ethylene glycol. Never use food containers for this purpose. Follow the vehicle manufacturer's instructions for the method of draining.

Coolant being drained

Antifreeze Observe the manufacturer's recommendation for antifreeze type and quantity. Antifreeze solutions for year- round use have additives and inhibitors to make them suitable for this type of application.

Check antifreeze regularly

Filling the Cooling System Some engines will fill without problems of air bubbles forming in the water jacket or heater. However, if problems are found, bleed the system in accordance with the vehicle manufacturer's instructions. Where bleed valves are fitted, open these before filling and close them when coolant flows freely. When an engine has to be run to force coolant through the heater, take care to keep clear of rotating components and hot coolant.

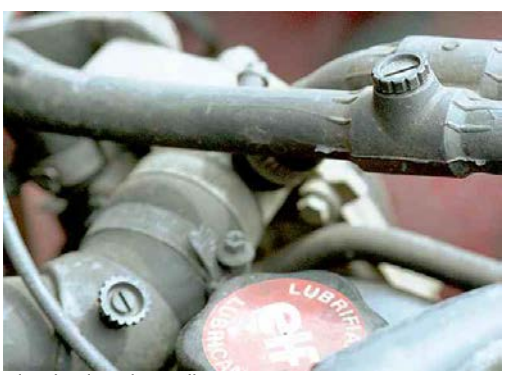
Bleed valves in cooling system

Customer Care All faults should be reported to the vehicle owner or driver – together with recommendations for further diagnostic tests or repair work. Always ensure that the vehicle is clean before returning it to the customer.

Overheating and Freezing For drivers, there are two main concerns relating to the cooling system. These are overheating and freezing.

Overheating is more common during the summer months and frequently occurs on long journeys and in traffic jams. Customers will appreciate it if you reminder them to check the cooling system for coolant level, water pump drive belt condition and for hose condition each spring.

Safety First Show customers what to look for and explain how important it is for safety reasons that they do not remove the pressure cap until the engine has cooled down.

Keep customers informed

Pre-Winter Checks During the fall, remind vehicle owners or drivers of the need for a pre-winter check of the coolant antifreeze content. Most manufacturers now recommend a 50 percent ethylene glycol solution. Explain why it important that this coolant mixture should be used for topping off that system.

Pre-winter checks can be important

Frozen Coolant If customers report frozen cooling systems, advise them to make sure that the engine is gently warmed until the coolant thaws. They must then have the antifreeze content checked and topped off as soon as possible. If necessary, explain how the coolant in the engine can be liquid, but if the radiator is frozen the engine will still overheat. The reason, of course, is that the coolant cannot circulate.

Coolant Leaks Coolant leaks can damage engines. A driver should watch the temperature gauge and make the daily or weekly checks needed for early detection of cooling system problems – particularly before any long trips. Advise customers that ethylene glycol is a skin irritant and can damage or discolor some types of paintwork.

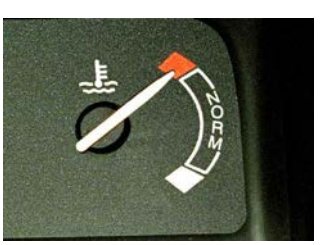

Temperature gauge

Summary Remember, regular checks of the cooling system will keep the vehicle reliable – and the customer happy!

Read the previous section again and note down some key bullet points here:

-
-
-

184. Worksheet Remove and Reinstall Engine (RWD)

Engine on a crane

R&R in-line engine without transmission. R&R transverse engine and transmission with crane. R&R transverse engine and transmission onto trolley. The method for removal of an engine from a vehicle varies according to the type of vehicle and the reason for removal. In some instances, it will be more sensible to remove the transmission with the engine; in others it will make more sense to leave the transmission behind.

185. Additional Worksheet Remove and Reinstall Engine (FWD) with crane

186. Additional Worksheet Remove and Reinstall Engine (FWD) with subframe

Planning Ahead of Work Careful planning before starting work is important. Read and follow the manufacturer's instructions. Use the correct equipment for holding and supporting the engine and vehicle. Carry out under-vehicle work before draining the cooling system to avoid working in spilt antifreeze, which is harmful to skin.

Electrical Cables and Vacuum Pipes Modern engines have many electrical cables and vacuum pipes that must be labeled before removal. If there is any risk of not remembering where parts are fitted, sketch and/or label the parts for reference on reassembly.

Make a sketch if it helps

Engine Fittings When replacing an engine with a new or repaired unit, check and make sure that the transmission and engine block locating dowels are fitted to the new engine. Failure to fit these dowels will lead to premature failure of the gearbox bearings. If a short motor is being fitted, the cylinder head locating dowels must be transferred from the old block to the new block.

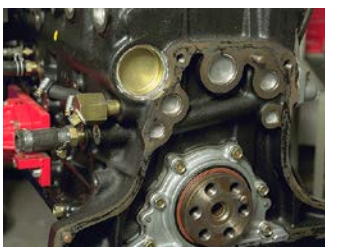
Check positions of dowels

Lifting Engine Safely Work methodically removing components under the engine and then in the engine compartment. Make sure that the weight of the engine is supported on a crane, bench or trolley before the engine mountings are removed. Lift the engine slowly from the engine mountings and check that all parts are disconnected before finally lifting the engine out of the vehicle. Keep hands clear of the lifting chains and sides of the engine compartment.

Lift with care

Aligning Clutch Center Plate When an engine is to be refitted to a manual transmission, the clutch center plate will need to be aligned with the spigot or pilot bearing in the crankshaft. A special clutch aligning tool is required for this. As the engine runs onto the gearbox input shaft, it is important that the weight of the engine does not apply a force on the shaft. This can cause damage to the gearbox bearings and the clutch center plate. Put a jack under the gearbox to lift and support it at a convenient height. Select first gear to stop the gearbox shafts from rotating and lubricate the shaft splines before installing the engine. Carefully align the engine to the gearbox and push the engine onto the shaft, rotate the engine to pick up the splines and then finally push the engine home onto the dowels. Hold the engine in place and fit and tighten the clutch housing bolts. Remove the jack supporting the underside of the gearbox and lower the engine onto the mountings. Continue to reassemble all other components. Carry out a full road test and checks after completing the engine installation.

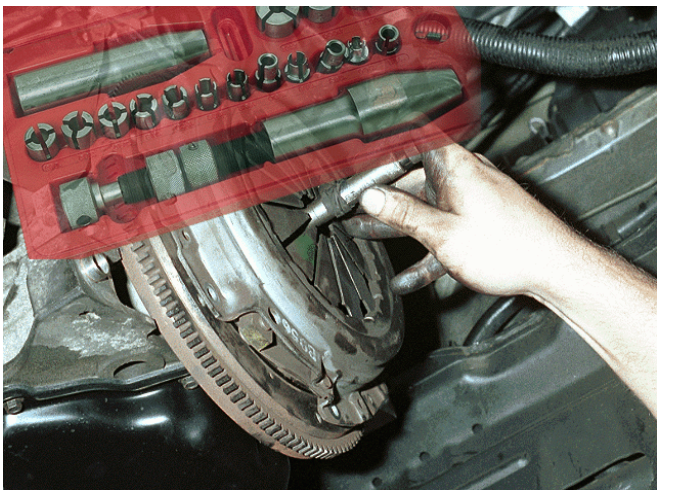
Alignment

187. Worksheet Inspect and Replace Pans, Covers Gaskets and Seals

These tasks are all straightforward, but attention to detail is required to prevent immediate or premature oil leakage. Cork gaskets can be easily over tightened causing distortion on the mating faces of oil pans, sumps and other covers. Always check and reface any distortion so that an even compression is applied to the new gasket.

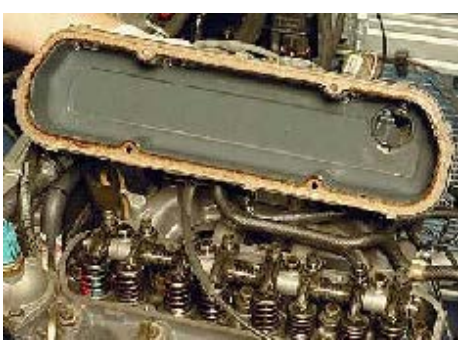
Rocker gasket

Clean Mating Faces Paper gaskets can take up and seal only small amounts of surface irregularities. Thoroughly clean old gasket material from both mating surfaces and check that they are true (flat) before reassembly.

Cleanliness is essential

Sealant Use a soft-setting sealer if recommended or where previous leaks have occurred. Apply silicon RTV (room temperature vulcanizing) formed-in-place gaskets exactly to the bead size specified by the manufacturer. It is important that any excess is not squeezed out into oilways where it can cause blockage and oil circuit failure.

Remove and Replace Oil Seals Remove and replace oil seals with special tools. Check the condition of the seal land. If deep underscores are found, these will need to be repaired or the component replaced. Lubricate the new oil seal before fitting and use a guard when specified to protect the seal lips during fitting. Do not ease a seal on with a screwdriver or other tool. This is very likely to nip or cut the seal lip.

Fitting the seal

188. Worksheet R&R Pistons and Connecting Rods

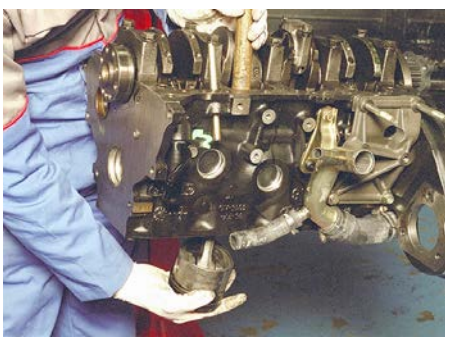
Piston and con rod

Before removing pistons, check that the positioning marks for the big-end bearing cap, the connecting rod and the piston are identified. Where no marks exist they will need to be made using an engraving tool, center punch or number dies. Mark with the cylinder number and the direction to the front of the engine. These marks will be needed to return all parts to their original positions. Big -end caps are not interchangeable between connecting rods. The shell bearings must be reinstalled in exactly the same positions as they were before removal, unless they are to be replaced.

Removing Pistons The normal procedure for removing the pistons is to undo the big ends to release the connecting rods from the crankshaft and then to tap the connecting rod upward so that the pistons come up out of the block deck.

Cylinder Head The cylinder head has to be removed to allow this to happen. Where the big end cap is held with studs, slide a piece of sleeving over the studs to protect the crankshaft and the cylinder walls from being scored during removal and replacement.

Sleeving in place

Piston Pins Pistons are held to the connecting rods by a piston pin or gudgeon pin. The pin has to be removed to allow the piston to be lifted off the connecting rod. There are two common methods of fitting and securing the piston pin. The pin can be a push fit in the piston and the little end bearing. These are held with circlips in the ends of the piston pin boss. Remove the circlips and push or tap out the piston pin.

Pin removal

Interference Fit The other method has the piston pin held firmly in the connecting rod small end as an interference fit. To remove the piston pin requires the piston to be supported on a special dolly in a hydraulic press. A mandrel is inserted into the piston pin and pressure applied to remove the pin. This should only be carried out if the piston and pin are to be replaced.

Fitting Piston Pins Fitting the new piston requires the little end to be heated to a straw color – at which point the metal will expand sufficiently for the piston pin to be passed through. This operation requires careful preparation and speed. Lay out components in order, with the connecting rod held in a heat-proof glove or in a vice.

Components in order

Fitting the Piston Pin Place the piston so that the front of engine mark aligns with the corresponding mark on the connecting rod. Clean and heat the connecting rods with a special heater or with an oxyacetylene flame working from a midpoint on the con rod into the little end. Do not exceed a pale yellow (straw) color, as this will weaken the metal structure of the connecting rod. Lower the piston over the connecting rod and quickly push the piston pin home and centralize before the heat is lost from the connecting rod and shrinkage grips the piston pin.

Pin fitting

Removing Piston Rings Removal of the piston rings is best carried out with a special tool that opens the ring gap and supports the ring. Piston rings are elastic and will open sufficiently to allow removal and refitting without breakage. However they are also brittle and will break if the elastic limit is exceeded. Be careful not to score the piston ring land with the ends of the ring.

Ring removal

New Piston Rings Where the original pistons are being reused with new piston rings, the cylinder ridge will have to be removed or special ridge dodger rings will be needed for the top compression ring.

Ridge removal

Deglazing Cylinder bores should be honed before fitting new pistons and deglazed when fitting new rings only. Honing requires the use of a special tool and power drill. Deglazing is sufficient when new rings only are being fitted. This can be carried out with rough-grade emery cloth and a cutting lubricant.

Cleaning Piston Ring Grooves Before fitting new rings to old pistons, the ring grooves have to be cleaned of all traces of carbon deposits. There are special cutters available for this task. Follow the manufacturer's instructions for selection of the correct cutting tool and for use of the equipment. If the special cutter is not available, it is possible to use pieces of the old ring as scrapers. Because these pieces have very sharp points on each end, extreme care is required. Obtain and use the correct equipment for personal safety.

Cleaning the old way

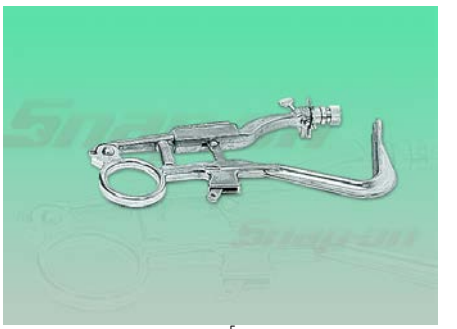
Piston ring groove cleaner[5]

Piston Ring Identification Check the manufacturer's instructions for the correct position of the rings, the topside and gap positions, how to identify the top compression ring from the second ring, and for the clearance and gap tolerances.

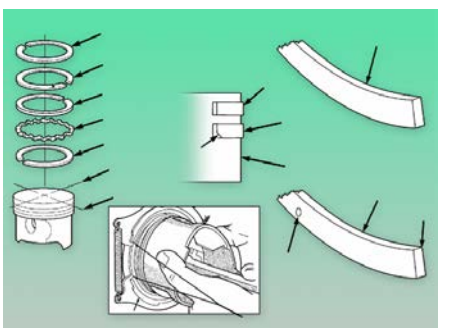
Ring details

Checking Clearance The ring side clearance in the piston groove is checked by slotting the ring into the groove and measuring with the appropriate sizes of feeler gauges. A typical clearance dimension is 0.04 mm or 0.0015 inch. This check is important where new rings are to be fitted to old pistons.

Clearance checks

Measure the Ring Gaps Check all ring gaps in the cylinder bores before fitting to the pistons. Push the ring into the bore and square it with the piston crown. Measure the gap with feeler gauges and compare with the manufacturer's specifications. If the gap is too close hold the ring gap over a small, fine file and gently file the ends. Recheck and repeat filing until the minimum specification is obtained. Typical gaps are not less than 0.08 mm per 25 mm of cylinder bore or 0.003 inch per inch of cylinder bore. Single-part oil-control rings should have their gaps set, but three-part rings using an inner expander and outer thin chrome rings are fitted as supplied.

Piston ring gaps

Bearing Nip Before fitting the pistons, assemble the big ends with the bearings in place and check bearing nip with a feeler gauge between the connecting rod and cap. The big end bolts are hand tight for this check. The bearing is held in place and prevented from rotating by the grip that is provided with the final tightening to torque.

Check for nip

Fitting Pistons Fitting the piston into the cylinder requires the piston rings to be compressed into the ring grooves. This is carried out using a piston ring compressor, which wraps around the piston and is pulled tight. Before fitting this tool, lubricate the cylinder bore, the piston and the big end shell bearing with clean engine oil.

Ring compressor

Piston Ring Compressor Lower the connecting rod into the cylinder, making sure that the front mark on the piston is to the front of the engine. Fit the piston ring compressor and lower the piston into the bore until the edge of the ring compressor rests on the block deck.

Piston Fitting Tap the top edge of the ring compressor to seat the bottom edge squarely on the block deck. Tap the piston with a soft mallet or hammer handle until the piston drops into the cylinder bore.

Carbon Deposits the piston fails to slide into the cylinder do not continue to force it down. Remove and refit the ring compressor. If this does not cure the problem, look at the fit of the rings in the piston. Where old pistons have been used check that the ring grooves have been correctly cleaned of old carbon deposits.

Do not use force

Final Checks Finally, when the pistons are in the cylinders and the connecting rods are located on the crankshaft, lubricate the big end cap bearings, fit the caps and tighten the securing bolts to the specified torque.

Apply some engine oil

189. Worksheet R&R Crankshaft, Vibration Damper, Flywheel and Clutch Pilot Bush/Bearing

Use marks to aid reassembly

Before removing the crankshaft check that the positioning marks for the main and the big end bearing caps are identified. Before removing the crankshaft, check that the positioning marks for the main and the big end bearing caps are identified. Where no marks exist, they will need to be made using an engraving tool, center punch or number dies. Identify the bearing cap position and direction toward the front of the engine. These marks will be needed for reassembly of parts to exactly their original position. Bearing caps are not interchangeable and must be returned exactly to their original position.

Vibration Damper On the front of the crankshaft are pulleys and gears for the auxiliary systems drive belts and the camshaft drive belt or chain. The drive belt pulley usually incorporates a vibration damper that consists of two parts bonded together with a rubber ring. The center hub is held onto the crankshaft with a bolt and located with a woodruff key. The pulley is incorporated in the annular ring on the outside of the damper. The rubber ring dampens crankshaft vibrations.

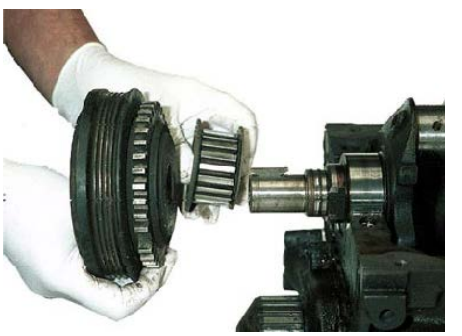
Damper

Special Puller If the vibration damper does not pull easily from the crankshaft a special puller that fits to the center hub must be used. Do not the pull the damper with legs that fit around the outside of the damper as these might pull the pulley from the hub.

Flywheel The flywheel fits to the gearbox end of the crankshaft and is held with a ring of bolts and located with a dowel or eccentric spacing of the bolts on a close-fitting boss in the center of the flange. When removing the flywheel, make sure you are ready to hold the weight before easing it off the flange. Check end float before undoing and removing the bearing caps to check the condition of the thrust bearings that control axial movement.

Ring gear and flywheel

Crankcase The crankshaft is lifted or lowered from the crankcase after removing the front and rear covers and seal housings, timing chain and sprocket (if fitted), the connecting rod big end bearing caps, and the main bearing caps.

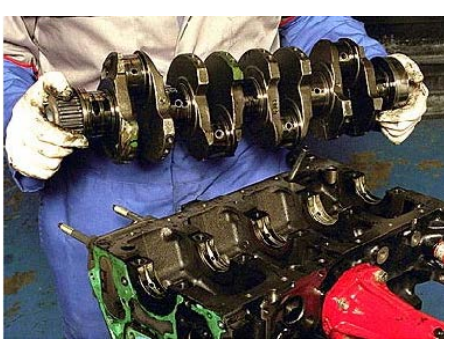
Crankshaft

Fit New Bearings Crankshaft journals and bearings should be checked. New bearings can be installed when the journals are serviceable. Check the old bearing shells for size and compare with the actual measurements of the journals. Fit new bearings of the same size as those removed.

Bearing shell

Tolerance When the crankshaft journals are worn below tolerance, the journals can be reground to an undersize dimension for which shell bearings are available.

Plastigauge Bearing clearances can be measured with 'plastigauge' for comparison with specifications. Fit new bearings into the block and caps and check the 'nip' by pushing together, bolts tightened finger tight, and measuring with a feeler gauge the gap between the block and cap. Follow the manufacturer's instructions for the fitting of oil seals.

Check bearing clearance

Cylinder Walls A cylinder wall ridge is produced above the top of the upper-compression ring on the piston. It is the part that is not worn in service. When new pistons and/or piston rings are fitted and the cylinder is not rebored, the ridge must be removed so that the new rings are not broken by contact with the ridge. Ridge dodger rings can be used, but these are not always available.

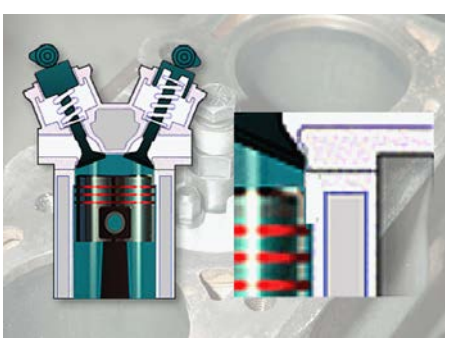

Cylinder ridge

Ridge Reamer A ridge reamer is a specialized adjustable cutter that fits into and rotates below the ridge in the cylinder and is used to cut the ridge to the existing profile of the cylinder wall. Follow the manufacturer's instructions for the selection of the cutter and the use of this equipment.

Removing the ridge

190. Worksheet Hone or Deglaze Cylinders

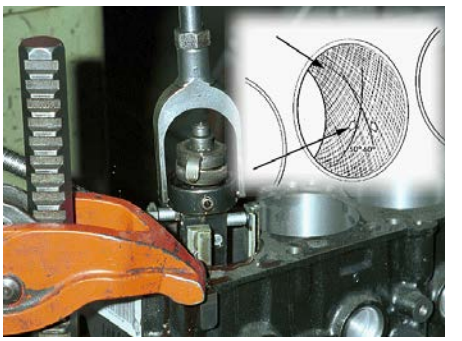
Honing

Cylinders should be honed if new pistons are fitted. This helps the new pistons to bed into the cylinder. The minimum requirement is to deglaze the cylinder walls for new piston rings. This is done with rough emery paper and a cutting lubricant. Honing also uses paraffin as a cutting lubricant and a set of grinding stones, which are run up and down the cylinder and rotated with a power drill. Moving up and down in the cylinder should produce a cross-hatch pattern. Do not remove more material than is necessary to produce a deglazed and patterned finish. Follow the manufacturer's instructions for the selection of honing stones and use of the equipment. .

Specialist work

Specialized Engine Repairers The commercial overhaul of engines and components is divided into two distinct areas. Most vehicle repair shops carry out engine strip and rebuild tasks but few are involved in the machining of components when wear and distortion requires reboring or re-facing. This task is left to the skills of specialized engine repairers. Such specialists can be hired to strip, remanufacture and rebuild complete engines, or they can carry out the machining tasks only.

Short motor or engine

Specialist Conditions Some modern engines with extremely fine running tolerances can only be built under specialized conditions and these require replacement as short motors with manufacturer's original spare parts.

Component R&R

Removal, Replacement and Machining This section deals with removal and replacement of components and the machining of components where this is normally carried out in the vehicle repair shop. All mechanical repair work must be carried out in a clean area, and components should be cleaned before being assembled.

191. Additional Worksheet Remove and refit cylinder head (OHC)

192. **Additional Worksheet** Remove and refit cylinder head (OHV)

Clean and Lubricate Cylinder blocks and cylinder heads must have all swarf and metal dust cleaned from the oilways and coolant passages after machining. All components that rotate or move against other parts must be lubricated before assembly. All mating faces must be clean and true if gaskets and seals are to be effective. Use sealants only where specified and be careful that sealant does not enter or block oilways.

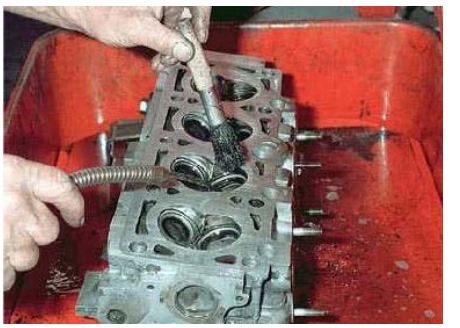

Keep things clean

Cylinder Head Removal Remove cooling, fuel, ignition, and exhaust components where necessary to allow for the removal of the head. Drain coolant into a clean drain tray for reuse. Avoid coolant draining into the cylinder bores and oil pan when the gasket is broken by draining the engine block completely.

Coolant

Head Bolts Sequence When undoing the cylinder head bolts a sequence and angular turn may be specified. If no specification is given, undo the bolts in the reverse order to tightening and crack all bolts by about an eighth of a turn (45 degrees) before fully undoing and removing. It is as important to prevent distortion during disassembly as it is during reassembly when precise tightening procedures are followed. If the engine is fitted with wet liners do not lift the head until the seal between the head and liners has been broken. Remove a locating dowel and twist the head to break the seal and then carefully lift off.

Fitting Cylinder Head Gasket Always clean and check the cylinder head and block deck faces before fitting the new gasket. The gasket should have a sealant applied only if specified by the manufacturer.

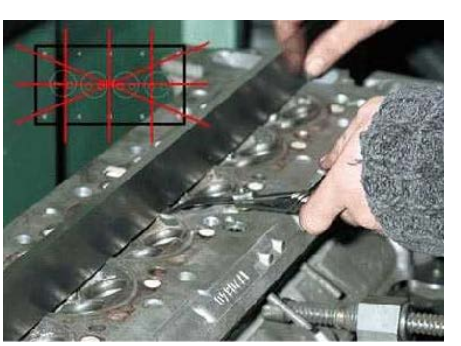

Gasket fitting

Tightening Sequence Assemble the head to the block and follow exactly the torque and sequence specifications for tightening the cylinder head bolts. Reassemble cooling, fuel, ignition, and exhaust components. Carry out a long road test and check that the heater works correctly. No heat from the heater may indicate a poor head gasket seal or air in the heater circuit. Carry out a thorough inspection for coolant and exhaust leaks after the road test.

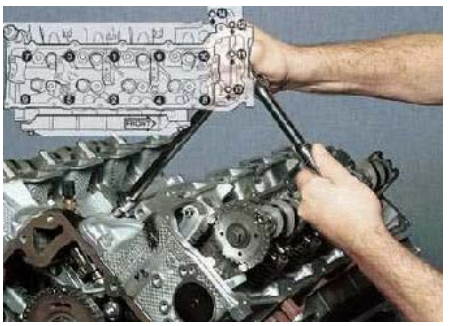
Refer to data for the correct torque sequence

R&R Components Assemble the head to the block and follow exactly the torque and sequence specifications for tightening the cylinder head bolts. Reassemble cooling, fuel, ignition, and exhaust components. Carry out a long road test and check that the heater works correctly. No heat from the heater may indicate a poor head gasket seal or air in the heater circuit. Carry out a thorough inspection for coolant and exhaust leaks after the road test.

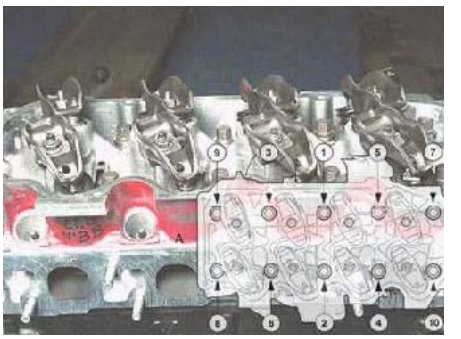
Valve gear

193. **Worksheet** Remove and refit valves and inspect head

Valve Spring Retainers Before removing the valves it is useful to tap the spring retainer to break the taper seat of the collets. This makes for easy removal with a valve spring compressor. Select a suitable valve spring compressor and press down the valve spring. The collets can then be removed with a small screwdriver or magnet.

Valve components

Parts Replacement Carefully release the spring tension to avoid parts flying out. Keep all parts in strict order so that every part goes back to exactly the same position. Mechanical parts become perfectly fitted into each other, and replacing to another position creates wear as the fit is different.

Take care with springs

Valve Replacement When the valves have been removed, clean and inspect the combustion chambers, valves and valve seats, and the ports. Some people prefer to clean the combustion chambers before removing the valves in order to give some protection to the valve seats while scraping off the carbon deposits. Check the wear and security of the valve guides and the valve seat inserts. If these are worn or displaced and require replacement, follow the manufacturer's instructions for removal and replacement.

Clean away old carbon

Valve Guides When the valves have been removed, clean and inspect the combustion chambers, valves and valve seats, and the ports. Some people prefer to clean the combustion chambers before removing the valves in order to give some protection to the valve seats while scraping off the carbon deposits. Check the wear and security of the valve guides and the valve seat inserts. If these are worn or displaced and require replacement, follow the manufacturer's instructions for removal and replacement.

Guides

Re-cutting Valves When the valves have been removed, clean and inspect the combustion chambers, valves and valve seats, and the ports. Some people prefer to clean the combustion chambers before removing the valves in order to give some protection to the valve seats while scraping off the carbon deposits. Check the wear and security of the valve guides and the valve seat inserts. If these are worn or displaced and require replacement, follow the manufacturer's instructions for removal and replacement.

Check the valve stem

Getting the Correct Angle Use a valve-re-facing tool to grind the valve head to the specified angle. An angle of 45 degrees is most often used, although some manufacturers have used a 30-degree angle. The re-cut valve must contain sufficient material above the re-cut seat to resist distortion and burning in service. Cut the valve seats in the cylinder head using either a hand-held rotary cutter or powered grindstone. Both of these are located and centralized to the valve stem by means of a tapered mandrel or pilot shaft. The seat angle is cut to an angle slightly less than the valve angle in order to improve gas sealing. An angle of 44 degrees or 44.5 degrees is often specified.

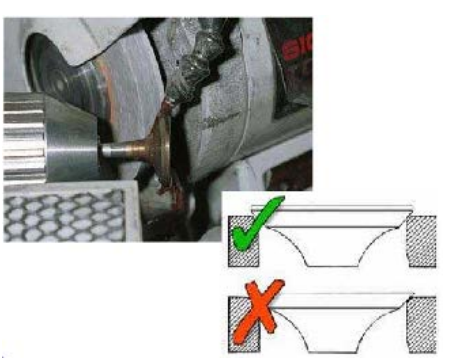
Valve head angle

Valve Positions Drop the re-cut valve into the valve guide and check its position relative to the face of the combustion chamber and valve seat. The valve head should protrude from the seat. If the valve drops into the seat it may be necessary to undercut the top at an angle of 30 degrees until the correct protrusion is provided. If the valve sits too high in the seat the throat will need to be re-cut at an angle of 60 degrees to allow the valve to drop into the seat. Always try a new valve in the seat before re-cutting as this may be a better course of action than re-cutting, which may create problems at a later date when new valves have to be fitted.

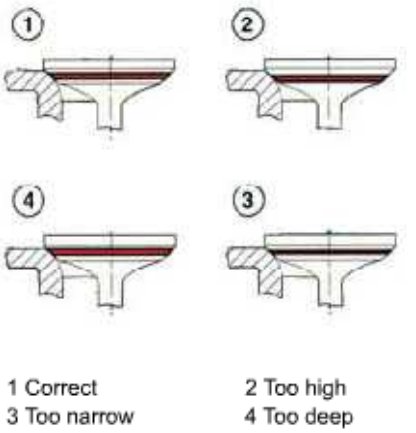

The Sealing Area Apply a fine cutting paste to the valve-seat face, lubricate the stem with clean engine oil, and drop the valve into the valve guide. Use a suction lapping tool to hold and rotate the valve on its seat. Lift and turn the tool from time to time to keep the paste on the seat. When the cutting action 'feel' is reduced, remove and clean both the valve head and valve seat. Inspect these for the position of the sealing area.

Valve Face and Seat Apply a fine cutting paste to the valve-seat face, lubricate the stem with clean engine oil, and drop the valve into the valve guide. Use a suction lapping tool to hold and rotate the valve on its seat. Lift and turn the tool from time to time to keep the paste on the seat. When the cutting action 'feel' is reduced, remove and clean both the valve head and valve seat. Inspect these for the position of the sealing area.

Checking the seal

Valve Springs Clean, inspect and measure the free length all valve springs. Compare with the manufacturer's data to confirm reuse or replacement. If there is any doubt regarding the condition of the springs it is better to replace them rather than to reuse them. Inspect the retainers and collets. When all valves and seats have been prepared, thoroughly wash all paste from the valves and cylinder head, lubricate the valve guides, and refit the valves with new valve-stem oil seals as necessary.

Spring length

194. **Worksheet R&R Rocker Shaft, Pedestals and Rockers, Strip and**

Rebuild A worn rocker shaft and rocker bushes can affect the performance of the valves. A worn rocker pad where it contacts the valve stem makes it difficult to adjust valve clearances to the correct dimension. To investigate and repair these defects, the rocker shaft has to be removed and stripped. This is a straightforward task but it is important to retain and return all of the components to their original place and position. Rockers and pedestals should go back to their original positions. Oil feed drillings between the cylinder head and one of the pedestals and the pedestal and the rocker shaft must be correctly aligned on reassembly.

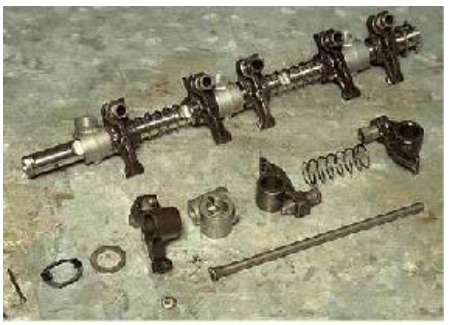
Rockers and the shaft

Worn Rocker Shaft A worn rocker shaft will need to be replaced together with a new set of rockers. Where the rockers are bushed the bushes can be replaced and reamed to fit the shaft. When replacing bushes check that the oil drillings are correctly aligned with the oil passages and clear of swarf. The pad on the rocker arm can be refaced on some valve regrinding machines. The correct curved profile must be reproduced because this shape helps the valve to rotate. Clean and lubricate all parts before reassembly. Use new split cotter pins or spring clip retainers.

Check for freeplay

195. **Worksheet** Remove and refit Cam Followers

R&R and adjust OHC tappets with shim/spacer adjustment. This task depends on the location of the cam followers or tappets. All cam followers sit in a bored housing, and wear of the follower or housing may cause abnormal noise. It is more probable that the followers will need to be removed as part of another task than for repairing defects in the followers but it is sensible to check the condition of these parts during removal.

Followers follow the cam

196. **Worksheet** Remove and refit and adjust cam followers with shims

Tappet Removal Solid or bucket tappets that sit in the side of an in-line OHV engine may be removable through a side plate after the push rods have been lifted clear. For engines where this is not possible, check with the manufacturer's instructions for removal either through the block deck or from the underside of the engine after the camshaft has been removed. Hydraulic tappets replace conventional cam followers on both OHV and OHC engines. They are oil filled and supplied from the engine oil circuit. There are feed and return drillings in each tappet bore, which align with drillings in the tappet block. The oil feed through the tappet housing and the individual tappets should be checked whenever they are removed. Hydraulic pedestals should be treated in the same way as hydraulic tappets.

Bucket followers (tappets)

Bucket Tappet Spacers Bucket tappets that sit directly over valve stems may have spacers or shims that are selected for size in order to provide the specified clearance. The spacers may be fitted in the top of the tappet and run against the cam or be fitted under the cam face on top of the valve stem. Whichever type is used, the first thing to do is measure and record the clearance on the back of each cam. Each measurement is then compared with the specification for the inlet or exhaust dimension and any error calculated. If the clearance is too small a thinner spacer is required and, if too large, a thicker spacer. Measure the original spacer and select and measure an appropriate replacement.

Measure the clearance

197. **Worksheet** Remove and refit Chain Driven Camshafts

R&R chain-driven camshaft drives on OHV and OHC engines. Chains and sprockets for camshaft drives are used on OHV and OHC engines. The chain is located in a chain case or timing cover on the front of the engine. The drive is taken from the crankshaft sprocket to the camshaft sprocket and the chain tension is maintained by a self-adjusting tensioner on the slack side. When the cover has been removed, the chain, sprockets, and the tensioner can be inspected. Because the chain must be refitted the same way, before removal check that it is possible to identify the direction of rotation of the chain.

Chain drive

Timing Marks Turn the engine to align the timing marks and lock the engine in this position if dowel or peg holes are provided. Follow the manufacturer's instructions for removal of the tensioner and be careful to avoid springs flying out when the tensioner is removed. Check the condition of the tensioner rubbing pad and replace if wear is evident. Chains without split links are used, and a sprocket has to be removed in order to remove the chain. Undo and remove the securing bolt on the sprocket and pull off the sprocket and then the chain. Inspect the chain and sprocket teeth. Check that the locating dowel for the sprocket remains in place for correct alignment on reassembly. Ensure that the correct direct of rotation is kept when a chain is reused.

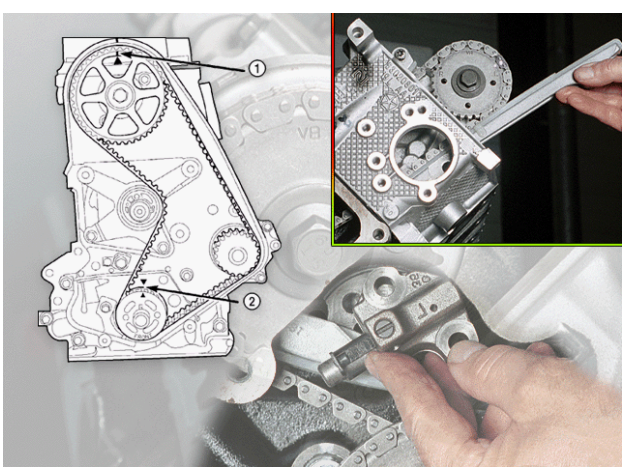

Marks

Camshafts in OHV Engines R&R camshaft and bearings OHV, including checks on valve timing. R&R auxiliary shafts and bearings. (engine removed)Overhead valve (OHV) engines have the camshaft located in the engine block. Before removal the drive chain, in some cases the cam followers have to be removed. It is usual to remove the engine oil pan or sump to gain access to the camshaft for support during removal.

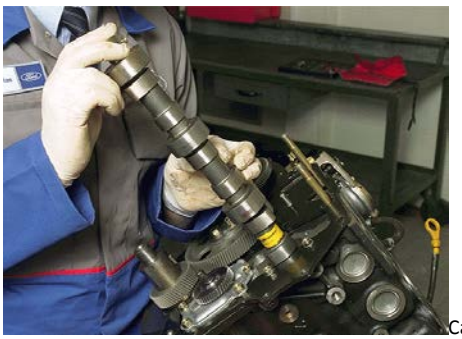
Camshaft

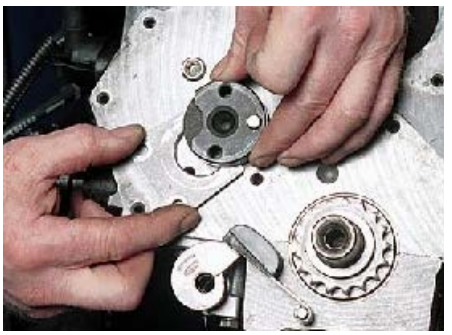
Cam plate

Camshaft The camshaft is usually mounted on a series of steel-backed white metal bearings that taper in size from the front to the back of the engine.

Removing Camshaft Plate The camshaft is held in place by a plate that locates in a groove in the front of the shaft immediately behind the sprocket flange. The securing bolts for this plate have to be removed to withdraw the camshaft from the engine block. Before removing the plate, check the end float with feeler gauges or a dti (dial test indicator). Compare the end float with the manufacturer's specifications and tolerances for wear.

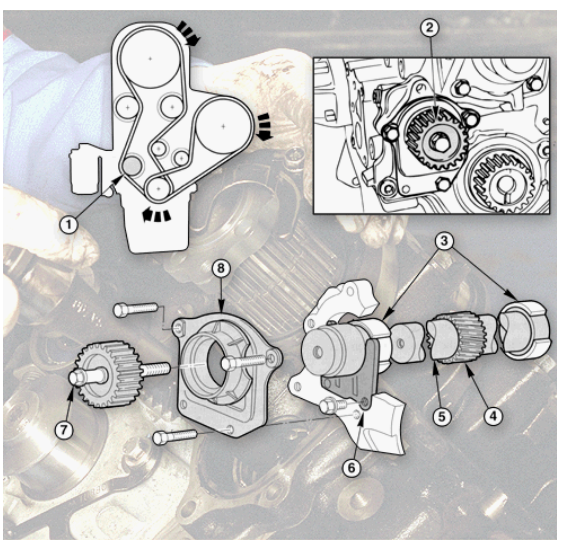

Cam components

Auxiliary and Balance Shafts Once the plate has been removed it is possible to slide the camshaft forward out of the engine block. This must be carried out carefully in order to prevent damage to the white metal bearings. Most auxiliary and balance shafts are fitted in a similar way. Some balance shafts have split-shell bearings. Some engines have one or two contra-rotating balance shafts. All shafts are timed to the crankshaft and the timing marks must be recognized and set before removal of any drive belt, chain or gear.

Bearing Replacement Replacement of the bearings requires special equipment and that you follow the engine manufacturer's instructions. Refer to a workshop manual for this procedure.

Valve Timing Valve timing is correctly set when the timing marks on the two drive gears are aligned with the appropriate marks. A protractor and dti (dial test indicator) can be used to check actual valve opening against valve timing data. Visual inspection of cam wear will usually indicate if the camshaft requires replacement.

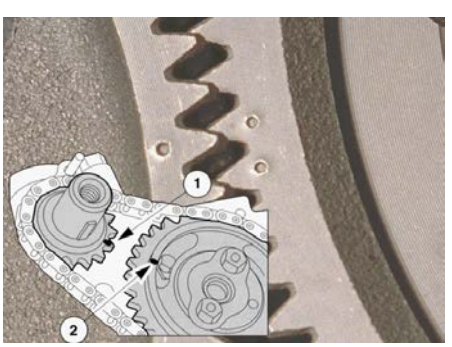

Check data

DTI in use

198. **Worksheet Remove and Replace Camshaft and Bearings OHC**

Including Checks on Valve Timing Some overhead camshafts are fitted into closed pedestals and are removed in a similar way to a camshaft located in an engine block. Other camshafts sit in split bearings in the head and are secured with bearing caps or ladder housing. Removal of the camshaft must follow the manufacturer's instructions.

Cam in position

199. **Worksheet** Inspect camshaft and bearings

Correct Alignment and Location Most engines require the engine timing marks to be set and the crankshaft and camshaft gears or sprockets locked in position before the camshaft bolts are undone and removed. Some engines require a sequence for removal and replacement in order to prevent distortion or incorrect location of parts. Accurate timing depends on the correct alignment of timing marks and/or on the location of dowels or on positioning of a cam with a dial test indicator (dti) that has a dedicated mount and plunger anvil. These settings cannot be certain without carefully following the instructions in a workshop manual.

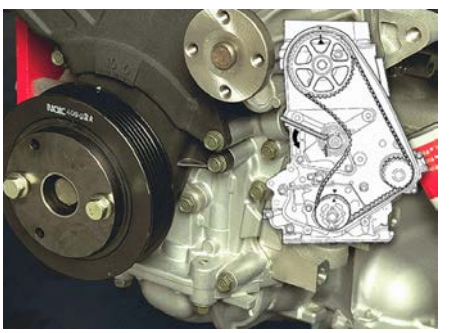
Correct data is essential

Remove and Replace Components The descriptions provided in this section deal with the components for individual replacement rather than as a part of other work. This type of repair is likely to be needed when an engine appears to be in reasonable mechanical condition, but the oil pressure has been found to be either high or low during a pressure test, or when oil leaks are found.

Oil pump and filter

Referring to Workshop Manuals Always refer to a workshop manual before starting work. You will need to look for the recommended procedure, special tools, materials such as sealants, tightening sequences and torque settings.

Always check the latest data

Leaking Seals or Gaskets If the repair is to fix a leak from a seal, gasket or sealing strip, inspect the old sealing and matching components to find out the reason for failure so that defective parts are not reused. Disconnect the battery unless the engine has to be started to carry out a test procedure.

Check the seals

Component Removal Refer to the Engine Mechanical learning program for details of engine mechanical component removal.

Components may need to be removed

Lubrication System Tools There are very few specific tools that are exclusively for the lubrication system. Refer to the engine mechanical learning program for special tools used for dismantling and reassembling engines. Some shaft and pump aligning tools and seal protection and fitting tools are specified by engine manufacturers. Always refer to the workshop manual for details on their applications and methods of use.

Seal fitting tool

Removing the Oil Pan It usually is necessary to remove the oil pan to gain access to the oil pump, pick up pipe and strainer. It may be necessary to remove, lift or hold the engine while a sub-frame or axle is lowered in order to remove the oil pan.

Pan removal

200. Worksheet Removing the Oil Pump

On some engines, the oil pump sits on the front of the crankshaft and the front cover has to be removed. On others, the oil pump is fitted to the side of the engine block, where it can be removed simply by loosening the securing bolts.

Pump removal

Oil Pumps Inside the Oil Pan For oil pumps inside the oil pan and for the oil pick-up pipe and strainer, remove the oil pan.

Oil pan

Drain Plug Drain the oil from the drain plug and inspect the plug and oil pan threads for condition.

Draining the oil

Lifting the Engine to Remove an Oil Pump 💻 To remove the oil pan, undo the bolts in the sequence specified by the manufacturer. Loosen the front and rear bolts on either side of the crankshaft main-bearing caps; loosen the other bolts along each side. Remove the bolts supporting the oil pan and remove it if it is free. If the oil pan does not fall free it is likely to be held with gasket sealant and will need to be carefully prized off.

Removing Gaskets and Sealing Strips Clean all of the old gasket and sealing strips from the engine block and oil pan mating faces. Be careful to keep particles from entering the engine.

Using a scraper

Removing the Pick-up Pipe and Strainer Remove the pick-up pipe and strainer by undoing and removing the securing bolts on the flange or bracket and the support bracket. Inspect the strainer mesh for clogging and the seal or gasket where the pipe enters the oil pump or block. Clean thoroughly and inspect for any damage or possible air leaks at the joints.

Pick-up strainer removal

Replacing Gaskets and Seals When replacing, use new gaskets or seals and only use a sealant if it specified by the manufacturer. Be very careful if sealers are recommended that no excess sealer is able to enter the oil pump feed drilling, because it could affect the pump performance.

Sealant

Oil Pump Drive When removing an oil pump refer to a manufacturer's workshop manual for the location and procedure for replacement.

Check data

Distributor Drive The drive for the oil pump may be linked to the drive for the ignition distributor. If this is the case, turn the engine to the ignition timing marks with number 1 cylinder near TDC before disturbing any securing bolts. Note the position of the distributor and oil pump drive shaft so that it can be returned exactly to the same position. Undo the bolts and remove the pump. Clean the old gasket material, being careful that none enters any oilway. Strip and inspect the pump or install a new pump if required.

Drive may be linked to ignition distributor

Fitting New Gaskets and Replacing Engine Parts Fit a new gasket or seal or 'O' ring and refit the pump and drive shaft, making sure that it is correctly aligned for distributor ignition timing. Refit the distributor if this has been removed and check and adjust the static timing position.

Ensure the distributor is timed correctly

Crankshaft Driven Oil Pump When the oil pump is fitted to the front of the engine and driven from the crankshaft, follow the manufacturer's instructions for positioning the engine before removing any components. Mark the direction of rotation on the drive belts and follow instructions for removing the belts, pulleys and the pump housing in the engine front cover.

Crank pulley

Replacing the Crankshaft-Driven Oil Pump Inspect or replace the pump with new gaskets and tighten bolts to specified torque settings. Refit the drive pulleys and belts retaining the original direction of rotation and check the alignment of pulley timing marks and the engine ignition timing.

Pressure Relief Valve The pressure relief valve (release valve) will be in the engine block or the oil pump housing. Refer to the manufacturer's workshop manual for information on removal of the valve. In some instances this is not permitted, as the valve is 'factory pre-set' and should not be disturbed.

Valve as part of the pump assembly

Pressure Relief Valve Seating The valve must make a good seal on its seat in order to maintain low-speed oil pressure. Once the oil pressure rises, the valve lifts off its seat under oil pressure. A spring is used to hold the valve ball or plunger in its seat. The tension of the spring is pre-set or adjusted to set the oil pressure.

Removing Pressure Relief Valve Remove the valve and spring in accordance with the manufacturer's instructions and inspect the seat, valve and spring. Replace any suspect parts. If the valve is adjustable, carefully follow the adjusting and checking procedures.

Valve components

Replacing the Oil Pan When replacing the oil pan, follow the manufacturer's procedures for the application of sealant to the gasket and sealing strips, and for the trimming of any gaskets or sealing strips so that a good fit is obtained.

Oil pan

Sealant

Fitting the Oil Pan Before fitting a pressed-steel oil pan, check the flange for distortion around the bolt holes. Reface distortion of the flange around the bolt holes using a suitable support and hammer. This must be carried out in order to ensure a good seal after refitting.

Secure the pan bolts

Hand Tighten and Torque Tighten Bolts Hand tighten all of the bolts in the sequence shown in the manual and finally torque to the specified settings. If a sequence is not specified, hand tighten the end bolts first, followed by the side bolts. Torque the side bolts from the center outward and finish with the end bolts. Do not over tighten cork gaskets.

Refitting the Drain Plug Refit the drain plug with a new sealing washer and fill with oil. Replace the oil filter. Run the engine and check for leaks.

Removal and replacement of the oil filter element is covered in the routine maintenance section. If a separate oil filter bypass valve is fitted it will be located in the filter mounting and may be removable by a similar method to the oil pressure relief valve.

Plug washer

Fit filter

Filling the system

Check for leaks

201. Worksheet Remove and Refit Oil Feeds to Oil Filters, Oil Coolers and Turbo Chargers

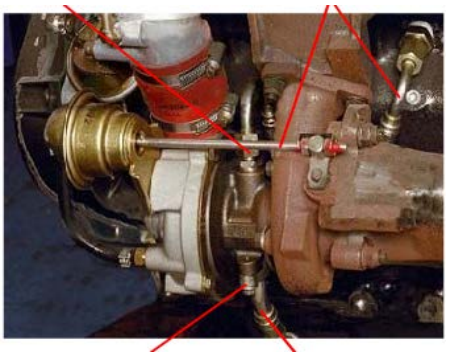

Most of the engine lubrication circuit is carried in drillings that are integral with the engine block and cylinder head. Feed and return pipes for ancillary components are connected by threaded unions from a pressurized drilling in the main gallery and by a return port in the engine block or oil pan.

The pipes may be solid pipes, but reinforced hoses with high-pressure unions are also used. Be careful not bend or kink the pipes. Some pipes are fitted with flanges and sealed with gaskets.

Airflow Type Oil Coolers Airflow type oil coolers are similar to and fitted next to the coolant radiator at the front of the engine compartment. Feed pipes and/or hoses to and from an adapter on or near the oil filter carry oil for circulation through the oil cooler. These pipes have threaded union nut fittings at each end for removal and replacement. The oil cooler is usually held with nuts and bolts through flexible rubber mountings.

Cooler

Coolant-Type Air Coolers Oil coolers that use the engine coolant are fitted between the filter and filter mounting and oil passes through on the way to the filter. A series of cooling pipes inside the cooler carry engine coolant for heat exchange. Flexible rubber hoses connect the cooler to the cooling system. The hoses are held with steel-band hose clips.

Coolant flows through here

202. Worksheet Removal of Oil Pressure Switch

The oil pressure switch is located in the main gallery on the side of the engine block. It is held with a threaded sleeve and has a hexagonal nut for standard size wrenches.

Remove the cable terminal and undo the switch. If low oil pressure is suspected, carry out an oil pressure test while the switch is removed.

Pressure switch position

Replacing Oil Pressure Switch Refit or replace the switch with a light smear of thread sealant and reconnect the cable. Run the engine to test the operation.

Check manufacturers' recommendations for sealant use

Oil Pressure Warning Light The oil pressure warning light is located in the instrument panel and can be replaced by accessing the rear of the panel, unclipping the bulb holder and fitting a new bulb of the same type and wattage.

Panel warning lights

Pressure Gauge Sender Modern pressure gauge sensors are fitted into the main gallery in place of, or as well as the oil pressure light switch. The two units are similar and replaced in the same way.

Gauge sender position

Oil Pressure Gauge The gauge is fitted into the instrument panel and must be replaced in accordance with the vehicle manufacturer's instructions in the workshop manual.

Gauge position

Oil Level Indication Sensor The location of the oil level indication sensor can be found in the engine manufacturer's manual or data books. Remove the electrical cable terminal and undo the sensor. Replace with a new sealing washer and thread sealant, if recommended.

Level sensor

Air Conditioning The operations included in this learning program apply to the engine cooling and in-car heating system only. Refer to the Engine Mechanical program for details of engine mechanical tests. Checks on the air conditioning system are also included in a separate program.

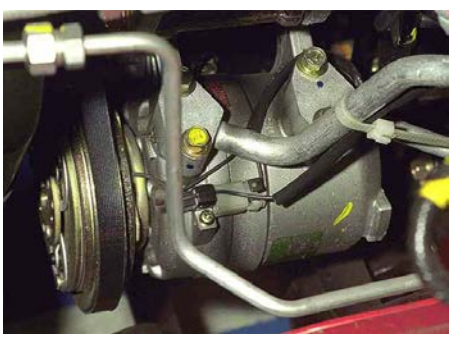
Air conditioning compressor and pipes

System Components Most of the cooling system components are attached to the engine or fitted to the front panel of the vehicle. Most components can be replaced but few can be stripped and repaired. The heater unit will require stripping for repair if coolant leaks or if airflow leaks occur. Some components will require the removal of parts from other systems in order to gain access to them.

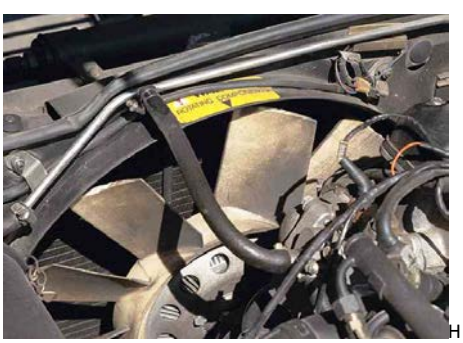
Hoses and fan

Heater being stripped

Camshaft Belts If engine camshaft belts are removed it is important to correctly re-time the engine on reassembly and to fit the toothed timing belt or camshaft drive belt, matching the original direction of rotation.

Cam belt

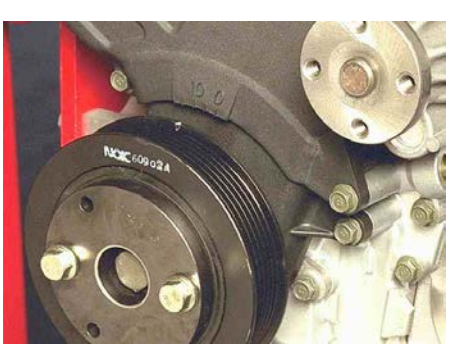
Timing marks

Coolant Whenever the coolant is to be reused, it must be kept clean. Always drain it into a clean drain tray. Avoid losing particles of gasket into water passages when scraping old gasket material from mating faces.

Draining coolant into clean tray

Scraping old gasket from mating faces

Heater Checking On completion of all cooling system tasks, it is important to check that the heater is working correctly. Run through all of the functions, including the operation of fresh air vents.

Heater controls

Air Locks Air trapped in the system may often prevent coolant circulation through the heater so that only cool air flows from the heater on the warmest setting. This is also a common symptom of a head gasket failure. Ensure that the heater controls are set on "hot" to prevent air from being trapped.

Air can get trapped in the system

Special Tools Very few specific tools and materials are exclusively used for the engine cooling system. When special tools are used, refer to the manufacturer's workshop manuals and data books for precise instructions on the applications and uses of these additional tools.

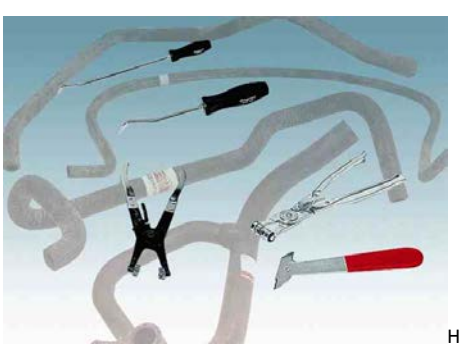

Hoses and tools

Workshop manuals and tester

Hose Removal A number of tools have been developed to help in the removal of hoses. These cranked and blunt-bladed probes can be eased into the end of a hose to break the seal against the connector pipe. Blunt screwdrivers can also perform this task. Another method is to use a sharp knife to cut the hose back, but this method can only be used when the hose is to be discarded.

Hose splitter[5]

Hose remover[5]

Hose Clips There are a range of specialized hose clips that require a dedicated pair of pliers for their removal and installation. These tend to be specific to individual manufacturers. Such pliers are included in the workshop equipment pack for the dealer. When the special tools are not available, the clip can be replaced with a general-purpose, screw-type hose clip.

Fl exible hose clip tool[5]

Hose clip crimping pliers[5]

Back Flushing In some markets, specialized workshop equipment is used to flush radiators. These have a water and air mixer tap for the reverse water flow through the radiator. The action of the air is to agitate the water and improve the breakup and removal of sludge deposits in the radiator tubes.

Expansion tank during back flushing

Specialist Radiator Repairs Specialized radiator repair shops have a range of equipment for the stripping, cleaning and rebuilding of radiators. Many carry out repairs and supply replacement radiators.

Ol d radiator…

…Repaired as good as new

Cooling System Repair Materials Materials used in cooling system repair include sealants for hose connections. Other sealants are used for water pump and thermostat housing gaskets and for thread sealing, where bolts run into water passages. These sealants are specified or recommended by vehicle manufacturers. Most sealants are soft-setting types, and commercial brand sealants are usually satisfactory.

Sealants

Core Plugs Core plugs are fitted into the engine block and cylinder head. These are a by-product of the casting process but serve as safety devices in case the coolant freezes.

Core plugs in cylinder block

Types of Core Plug Two types of plug are used. A domed core plug sits in the hole and is pressed inwards at the center so that the outside diameter expands to make a tight fit. A dished plug has slightly tapered walls that fit tightly in the hole when it is inserted.

Domed core plug

Fitting Core Plugs The photo sequence here shows one method of core plug replacement. Follow manufacturer's instructions if there is any doubt about the proper procedure. Be careful not to damage the engine block or cylinder head.

Fitting a dished core plug…

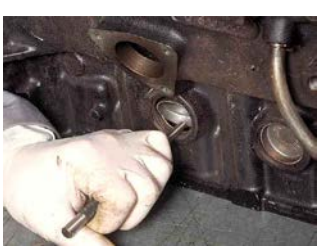
Tap with care…

Then remove with pliers…

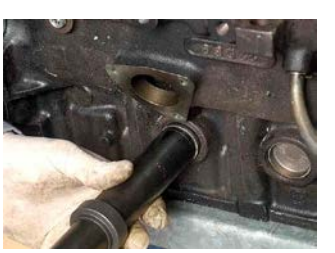
Finally refit with a drift

Removal of Core Plugs Removal of the core plugs can be carried out using either a punch-through method or extractor method. Replacement is carried out using an appropriate size dolly and soft hammer. A hard-setting sealant is usually specified or recommended. It is smeared around the lip of the hole before fitting the core plug.

Antifreeze Antifreeze is an important component of the cooling system and should not be replaced with a general-purpose product – unless it is specifically recommended and approved for the vehicle. Different types of antifreeze and inhibitors are mixed and marketed for specific applications. The type must be a suitable product for the vehicle and conform to the original equipment specifications.

Antifreeze concentrate

Coolant Disposal In some regions, antifreeze and coolant recycling plants are available. This unit filters out toxic dissolved metals while reverse flushing the cooling system. It should be installed and used in accordance with the manufacturer's instructions.

Dispose of antifreeze with care

203. **Worksheet** Remove and refit radiator, heater and bypass hoses.

This task requires care when removing the hoses from the radiator connectors. These parts are the weak points in the construction of the radiator and can easily be damaged. Never attempt to fold the hose over in order to break the seal between the hose and connector. Break the seal using a special tool or old blunt screwdriver blade.

Removing hoses - breaking the seal

Coolant Draining Where no drain tap is fitted to the radiator, leave the radiator cap in place and place a drain tray below the water pump. Remove the bottom hose from the water pump. When the flow of coolant from the hose has been directed into the drain tray, remove the radiator cap. Hold the end of the hose as low as possible in order to ensure that all of the coolant is removed.

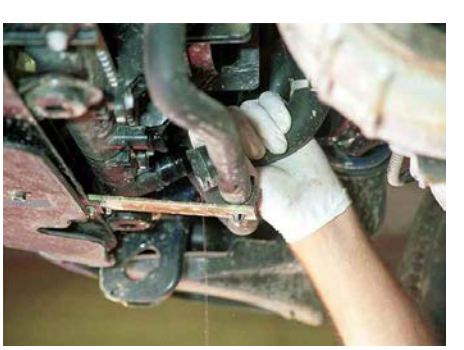
Draining coolant from the bottom hose

Refitting Hoses When refitting hoses to connectors, ensure that the hose fits fully onto the connector. Fit and tighten the hose clip so that it sits up to but not over the lip or bead on the connector.

Fitting a hose

Refilling the System Refill the system, bleed air from the heater if necessary, and always carry out a full heater system check during a road test. Allow the engine to cool after road test, recheck the coolant level and look carefully for leaks. When the replacement of hoses is due to stretch or tear damage, check the engine mountings for condition, as it is possible for excessive engine movement to damage the hoses.

Refilling radiator

Heater controls

Check for level and leaks

Engine mountings

204. **Worksheet** Remove and refit drive belts and pulleys.

The water pump drive belt on many engines is the same belt that is used for the alternator. On serpentine belt arrangements, the belt is common for all ancillary systems.

Drive belts and pulleys can be quite complex

Cam Belt Driven Pumps Some engines with overhead camshafts driven by a toothed belt have the water pump driven by this belt. The pump is usually driven by the teeth, but in some cases by the flat side of the cam belt.

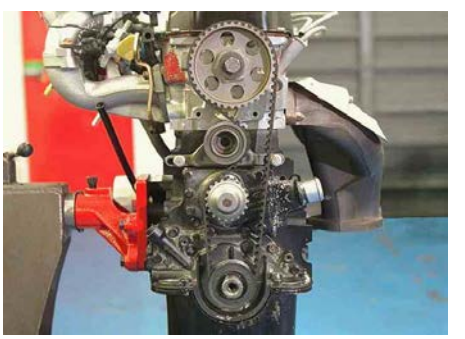
Camshaft belt and water pump drive pulley

Belt Tension Whatever the type of belt and drive arrangement, it is important that the belt is correctly tensioned. If removed, it should be refitted in the same direction of rotation. The correct timing of the cams is very important. Follow manufacturer's instructions for this task.

Belt tension is important

205. **Worksheet** Remove and replace thermostat.

The thermostat can be fitted in one of three places: in a housing on top of the engine, in the top hose or in a bypass housing. Some manufacturers fit the thermostat and housing as a single unit. In this case, the complete unit has to be replaced if a new thermostat is required.

Thermostat…

Being removed

Thermostat Replacement Drain only as much coolant as is required to bring the level below the thermostat. When replacing the thermostat, ensure that the wax pellet is on the hot coolant side, which usually means into the engine or the bypass coolant passage. Check the mating faces of the thermostat housing for flatness before replacing. Use a sealant on the gasket and on any bolts that run into the coolant passages.

Coolant level below thermostat

Thermostat being replaced

Check the thermostat housing flatness

Sealant on gasket and bolt threads

System Checks Check and top off the coolant after reassembly. Check for coolant leaks as soon as the engine is running. When the engine has warmed up check that the heater works correctly. After a road test, check that the coolant level and heater operations are still correct.

Leaks and heater checks

206. **Worksheet** Remove and replace water pump and engine driven fan. This task is the next step after removal and replacement of the water pump and fan drive belt.

Water pump being removed

Viscous Hubs The coolant can be drained while the drive belt is being removed. Always carry out under-vehicle work before draining the coolant. Where viscous hubs are fitted, a special spanner wrench may be needed to remove the viscous hub from the water pump spindle. Once the water pump pulley and fan have been removed, undo the bolts securing the water pump and ease it from the engine block.

Fan hub being removed

Pump Removal If the pump is held firmly into the block by corrosion or the adhesion of any sealant, it may be necessary to pry the pump loose. However, always check that all bolts have been removed before applying force. Check the flange and impeller fitting on the new pump before fitting. Clean the mating faces before reassembly and apply a soft-setting sealant to the gasket and to any bolts that run into the coolant passages.

Levering the water pump out

Checking new pump

Sealant on gasket…

And bolts

207. **Worksheet** Remove and replace radiator and electric fan motor and switches.

Drain the coolant from the radiator following the manufacturer's instructions.

The removal and replacement of radiators must be carried out carefully. It is easy to damage the radiator core tubes and fins.

Lifting out radiator with electric fan and cowl

Radiator and Fan Motor Removal Look carefully at all fixing screws when they are removed. This will ensure that any long screws are not put back in the wrong position where they could puncture the radiator. Remove the fan motor and mounting frame from the radiator before removing the motor in order to protect the radiator from the risk of accidental damage. Electric fan motors are usually fitted to a cowl or frame attached to the radiator. The electric wiring for the switch and the motor are connected with a multiplug close to the switch.

Marking fixing screws for cowl

Multiplug connection

Removing the fan cowl and motor

Removing the fan motor

Radiator Damage Where damage has occurred to the radiator, fan or motor mounting plate, check and fix the cause of the damage. Look for such things as are defective engine mountings, loose plates and lost or removed covers. Fitting damage includes punctures from screwdrivers when they slip from hose clips, and the fitting of overlong screws.

Damaged radiator

Vehicle Presentation Always ensure that the vehicle is clean before returning to the customer. Remember, a happy customer will come back!

Read the previous section again and note down some key bullet points here:

-
-
-
-
-

Fault Diagnosis

Checking the System

The Engine – Mechanical Repair Checking performance of the engine in this learning program covers the engine mechanical components. Before carrying out full engine diagnostic procedures, all engine systems should be studied. These include the following, which are covered in other learning programs: the engine lubrication system, the engine cooling system, the ignition system for gasoline engines, the fuel system, the air supply, exhaust and emission-control components, the battery, starting and the charging systems. Faults on other vehicle systems can create symptoms that appear to be engine faults, and these can be misleading when diagnosing faults.

Diagnostic Procedures Diagnostic procedures must be carried out in a logical and sequential manner, which builds up information for comparison with engine manufacturer's specifications. In some instances, a technician's knowledge of acceptable levels of noise, ’feel,’ wear or smell may be necessary, and discussion with experienced technicians may be required. Diagnostic decisions should be used as a guide for any repair work that may be needed. During repair the conditions of suspect components should be checked to confirm that the original diagnosis was correct. If confirmation is not obvious, further analysis and a new range of possibilities should be considered.

Component checks

Engine Running Systems The types of diagnostic procedures that can be used will vary according to the symptoms, the suspected fault and the equipment available. The following chart lists some of the symptoms that may be found with faulty engine mechanical components, some possible causes, other systems that need to checked and the equipment for carrying out engine mechanical diagnostic check.

Fault Diagnosis The types of diagnostic procedures that can be used will vary according to the symptoms, the suspected fault and the equipment available. The following chart lists some of the symptoms that may be found with faulty engine mechanical components, some possible causes, other systems that need to checked and the equipment for carrying out engine mechanical diagnostic check.

Engine Mechanical Components The tests listed can all be carried out with engine analyzers or less expensive equipment that can quickly establish the condition of the engine mechanical components. This must always be the starting point for all engine diagnostic tasks.

Compression Loss If the engine compression and combustion pressures are lost through defective valves or past the piston and cylinder walls, then all additional work to other systems may be of little value.

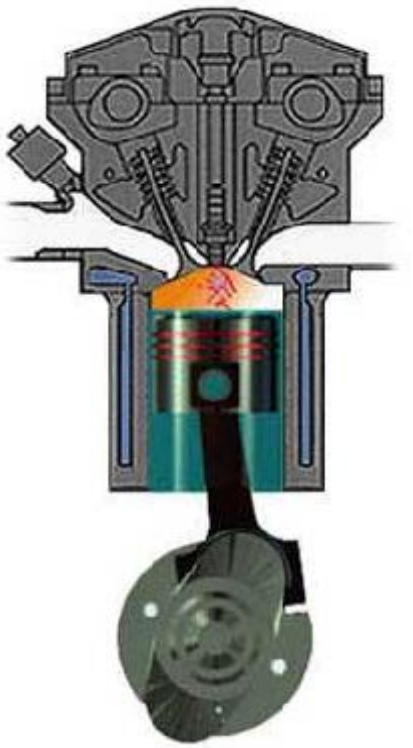

Lack of compression results in poor operation

Engine Analyzer An engine analyzer or diagnostic center is a large item of equipment that incorporates all of the tools used for checking engine system performance. The main item is an oscilloscope used to display the electrical wave patterns of the ignition's low- and high-tension circuits and the alternator output. It also can be used for other electrical or electronic components or systems.

Bosch analyzer

Timing Lights They are also fitted with a stroboscopic timing light and gauges, which can include vacuum, engine speed (rpm), ignition dwell angle, exhaust gas constituents and test programs for cylinder leakage and cylinder balance. Newer versions have a computer screen in place of the oscilloscope. The screen displays data about the condition of components checked by the test sequences programmed into the computer. The use of this type of equipment usually requires additional training for the specific product. Comprehensive instruction manuals are supplied with the equipment and should be used until the user has learned to use the equipment properly.

Types of Equipment Individual gauges and diagnostic equipment can be obtained as hand- held single units or packages with various combinations.

Pressure test gauges

Cylinder Leakage Testers These can be part of an engine diagnostic center or can be freestanding units. Both require a compressed air supply and are used in a similar way. The spark plugs are removed and the engine turned to top dead center (tdc) on the cylinder to be tested.

Leakage test gauge

Piston Position This is often achieved with a whistle screwed into the spark plug hole or with a dti (dial test indicator). An adapter is screwed into the spark plug hole and a regulated amount of compressed air blown into the cylinder. The gauge on the tester indicates the retention of pressure as a percentage. Readings above 80 percent are acceptable for all engines. Lower readings indicate a loss of pressure, which can be located in the inlet manifold for a defective inlet valve, in the exhaust for a defective exhaust valve, in the rocker cover for piston blow-by and in the coolant for head gasket leakage. Take care with this test, as it is possible for the engine to spin when the air pressure is applied. Always wear safety goggles when using compressed air.

Removing the plug

Cylinder Compression Testers Cylinder compression testers for gasoline and diesel engines are different. Many gasoline types are hand-held into the spark plug hole; others are threaded. Diesel engine compression testers are screwed into the injector pump or glow plug hole. These can be used by cranking or running the engine, depending on the type of tool and the engine manufacturer's instructions. For all compression testing, follow the instructions for the type of tool being used.

Snap-on compression testers

Stethoscope or Sonoscope This is a sensitive sound detector that is used to locate and listen to mechanical noises by touching the probe to the casing of mechanical units. It is useful to locate noises that travel through blocks, housings and casings.

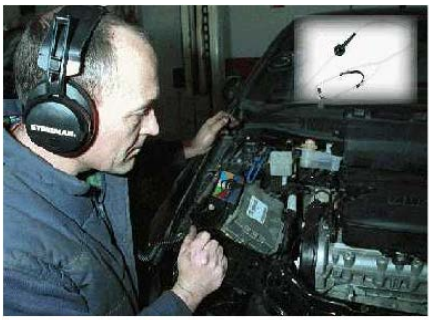

Listen…

208. **Worksheet** Carry out visual Checks on Stationary Engine

These checks can be quick visual checks that are carried out at all service intervals or can be full checks at other times when faults are suspected. The visual check includes looking at components shared with other systems. The main items for inspection are gaskets and oil seals, drive belts and for component security.

Visual checks can reveal much

Check Drive Belts for Condition Coolant leaks leave a telltale greenish white powdery stain below the leak where antifreeze has dried. Check drive belts for condition. Look for frays, cracks and glazing on the belt sides. Check that the belt tension is correct for the type of belt.

Tension check

Check Engine Mountings Always look closely and carefully at the engine mountings and the brackets on the engine and body or chassis of the vehicle. Look for fractures, loose securing bolts and separation of the bonded rubber mount. Check the air inlet and exhaust pipes for security, routing and condition.

Mountings

Types of Checks The tests that can be carried out on an engine consist of visual inspections for the level and condition of the oil and for leakage.

Running Engine Tests On a running engine, the tests look at the color of the exhaust, which will show blue smoke if oil is being burnt.

Check exhaust gas condition

209. **Additional Worksheet** Carry out oil pressure test

Oil Pressure Gauge Oil pressure can be measured with a pressure gauge fitted to an adapter screwed into the oil pressure switch connection in the main gallery.

Pressure tests

Crankcase Ventilation System The crankcase ventilation system must be working correctly in order to obtain accurate data on the engine lubrication system performance.

Inspect stationary and running engine for oil leaks and oil consumption (blue exhaust smoke). The first part of this inspection looks at the oil level and condition. The level of oil in an engine and the frequency of topping off are used to check oil consumption.

Basic checks

Checking Oil Level The oil level is checked with the dipstick, which has full (maximum) and low (minimum) limit markings. The vehicle must be level for accurate measurement of oil level. It is important to keep the oil level above the minimum because a low oil level can result in a temporary or permanent loss of oil feed.

Don’t be a dipstick – check the oil,,,

Overfilling With Engine Oil Overfilling reduces the air space in the oil pan and affects the operation of the crankcase ventilation system, increasing crankcase pressure and creating oil leakage by forcing oil past the crankshaft seals. Once the leak path has been created, reducing the oil level will not necessarily stop the oil leakage. Where an overfill is excessive, it is possible to cause engine damage from hydraulic action because oil is forced into spaces that are too small and when the oil cannot escape, components will be fractured.

Oil Condition The oil condition can be seen and be felt from the small quantity that adheres to the dipstick. The color of the oil will vary depending on the formulation and the additives, but as a general rule the oil should not be excessively black or creamy in color. Black is usually an indication of old oil that has a high carbon and dirt content. Creamy-colored oil indicates high water content and an emulsion of oil and water.

Check oil condition

Water in the Engine Water considerably reduces the efficiency of lubricants, and the cause of the water ingress should be investigated and fixed.

How Water Can Enter the Engine There are three ways in which water is likely to enter the engine. These are from the cooling system, from rainwater or similar sources and from condensation of water vapor on cold surfaces inside the engine. Water is a by-product of combustion and condenses in a cold engine. For vehicles used only for short trips, the water does not evaporate as it does in hotter engines traveling greater distances.

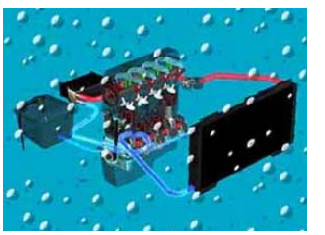
Water gets in - in three ways

Good Oil Characteristics The 'body' of good oil has a similar 'feel' to new oil of the same type.

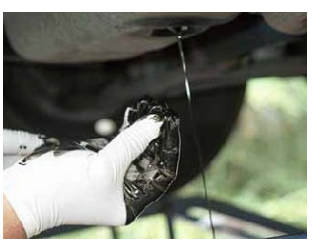
Check the 'feel'

Introduction The checks included in this learning program apply to the engine cooling and in-car heating system only. Refer to the Engine Mechanical learning program for details about engine mechanical tests. Checks on the air conditioning system are also included in a separate program.

Pressure tester

Operation of the Cooling System The proper operation of the cooling system is important to ensure clean and efficient combustion. A quick check of cooling system performance should be made at every scheduled service interval.

System Performance Checks System performance checks are routine activities that take place during all servicing work. They start at pre-delivery and continue for all scheduled intervals.

Regular Checks A complete check of the system should be carried out at regular intervals. Diagnostic checks should be carried out whenever faults are suspected.

Pressure test

Component Replacement Many cooling system components require replacement during the service life of the vehicle. If failure is not detected early enough, coolant leakage may occur and engine failure is likely.

Hoses and drive belts

Breakdowns Many roadside breakdowns are caused by cooling systems overheating. There are a number of common causes for this, including loss of coolant and broken drive belts. Pressure loss from the combustion chambers into the coolant jacket is also possible.

210. **Worksheet** Inspect system for leaks and the condition of hoses and other components.

Carry out a pressure test to the system and cap. Check the coolant for condition and antifreeze strength. This check can be completed in full with the use of the pressure tester, or it may be part of a quick check when only a visual inspection is carried out. The complete check is necessary for diagnostic purposes.

Coolant Leaks Check all hoses, pipes, joints, gaskets and the water pump. The heater and water valve should also be checked for external leaks. Look inside the vehicle under the heater for leaks from the heater core. If no external leaks are visible, check the coolant for oil contamination. Check the coolant for contamination when checking the level.

Cooling system component checks

Antifreeze Content A check of the antifreeze content with a hydrometer may indicate a reduced percentage of antifreeze. This may indicate that frequent topping off with water has occurred. Check with the owner or driver of the vehicle for information on the need for topping off the coolant.

Antifreeze hydrometer

Pressure Test If no leaks can be found, although regular topping off is needed, check the condition and operation of the pressure cap. It may also be necessary to carry out tests for exhaust gas contamination in the coolant. This is carried out with a special liquid in a container attached to some types of pressure testers. The color of the liquid changes if exhaust gas is present in the coolant. Follow the equipment manufacturer's instructions for carrying out this test.

Check cap and also look for exhaust gas contamination

Read the previous section again and note down some key bullet points here:

-
-
-
-
-

Inspect/Measure Components

Inspect Pistons, Piston Rings and Connecting Rods and Bearings Pistons are inspected and measured for wear and damage and to help identify faults with other components or systems. A visual inspection is carried out to look for piston crown damage, ring land scoring, and damage from broken piston rings, wear at the piston pin bosses, piston skirt condition, and other deterioration. Pistons can be measured using a micrometer. Measurements are taken at 90-degree positions in line with the piston pin axis and the thrust face. Comparison measurements are taken near the ring land and skirt. These measurements are compared with the manufacturer's specifications and tolerances to see if the pistons can be reused.

Piston and rings

Piston and Piston Ring Wear Pistons are subject to slow wear, but piston rings – which make running contact with the cylinder walls – wear more quickly. As piston rings wear, a build up of carbon occurs in the ring grooves behind the rings. It is possible to replace piston rings onto original pistons provided the carbon deposit is fully removed. However, it is important to check the ring groove for wear. This is done by measuring the clearance of the ring in the ring groove with feeler gauges. Carry this out in a number of places for all ring grooves.

Checking ring wear

Connecting Rods Although it is unlikely that the connecting rods on modern engines will distort in service, you should perform a quick measurement to check that they have not become bent or twisted. This requires a special tool or surface table and feeler gauges or a dti. Fit the bearing cap to the connecting rod and fit to the measuring equipment. Hold down on the surface table. Measure under the little end bearing at all positions or measure above the little end around the hole with the dti. All dimensions should be the same if the rod is not bent or twisted. Other methods are used by some manufacturers. Details of these are included in their workshop manuals.

Con rod checks

Big-End Bearings Big-end bearings are inspected visually for general and uneven wear. The bearings are designed to wear before the journals, so it is possible to fit new bearings to old journals. Investigate the cause of any uneven wear. Connecting rod distortion is a possible cause of uneven wear.

Bearing shells

Machining Big Ends 💻 A high spot of uneven wear on a bearing may indicate that the bearing mounting is not true. Specialized engine repair shops can machine the big end and supply oversize bearings so that the con rod can be reused.

Bearings When assessing partial wear for reusing or replacing the bearings, measure the clearance between the bearing and journal with Plastigauge. Follow the manufacturer's instructions for this and compare the result with specifications and tolerances.

Plastigauge

211. Worksheet Crankshaft condition

Crank

Inspect the bearing surface material of the main and big end bearings for general and uneven wear. The bearings are designed to wear before the harder surfaces of the journals. The shell bearings consist of a steel shell with a number of backing layers under the bearing surface material. When the bearings are worn the backing layers become visible. Where journal wear is within tolerance replacing the bearings with a set of the existing size is an acceptable method of repair. When this is done the crankshaft does not have to be reground. The thrust bearings are inspected in the same way but also including information from a check of the end float that should be made before removal of the crankshaft.

Bearing Clearance Bearing clearance is measured with plastigauge and compared with manufacturer's specifications. The crankshaft is measured for twist and bow by placing in vee blocks on a surface table and measuring with a dti. The journals are measured for size, taper and ovality. They are inspected for scoring, undercutting or other damage. The journal faces are accurately ground and heat-treated and can be reground in many instances provided that the depth of heat treatment is not penetrated.

Check for wear

Fillet Radius A radius is machined where the journal meets the crankshaft web. This is known as a fillet radius and must be undamaged for regrinding to be suitable. Undersize bearings (which are thicker to take up the material cut from the journals) are used with reground crankshafts.

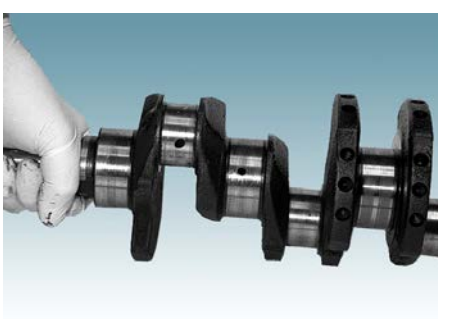
Crank

Crankshaft Journals Measurements of the journals are taken at two points and at 90- degree intervals. Compare the results with others on the same journal, with other main or big-end journals, and with the manufacturer's specifications and tolerances. Check that all of the oil drillings are clear.

Checking the oilways

Inspect Engine Block and Cylinders for Condition and Wear The cylinder block should be visually checked for cracks, corroded or leaking core plugs, and sediment in the water jacket. The block deck is checked with a straight edge and feeler gauges for truth (flatness). Check along, across, and diagonally. Check the bolt or stud holes for pulled threads. Check all oil ways are clean and clear.

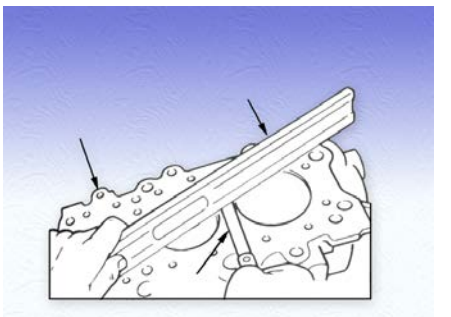

Check block face for flatness

Engine Block Check the fit of the pistons in the cylinder bores at top dead center (tdc) – the position of greatest wear – by rocking the piston and observing the amount of free play. If more than a very small amount (0.5 mm) of free play is found the cylinders will need to be measured and checked against the manufacturer's data for tolerances. Check the cylinders for scoring. Check the cylinders for wear by measuring the diameters for ovality and taper. The greatest wear occurs just below the wear ridge. Measure across and along the axis just below the ridge and at a point just above the lowest point of the swept cylinder. Use these dimensions for comparison to assess wear, taper, and ovality. Compare the findings with the manufacturer's specifications and tolerances.

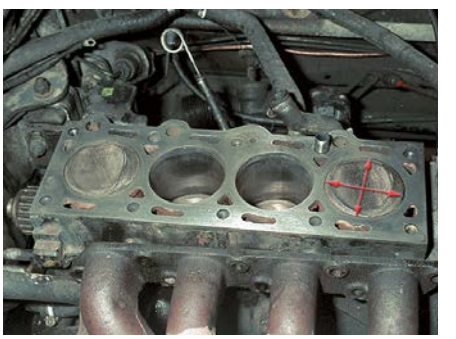

Piston movement indicates wear

Inspect and Measure Components Diagnostic tests on a running engine will often indicate faulty components. It is usually necessary to strip and inspect components to confirm the fault and to decide on the best possible course of action for repair.

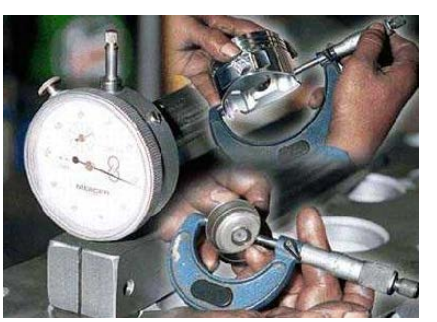

Tests are important

Breakage or Wear Most engine faults occur as a result of breakage or wear. Cam belt failures often lead to valve and piston damage.

Engine components

212. **Worksheet** Inspect pistons, piston rings and connecting rods and bearings

Visual Inspection and Measurement of Faults Loss of coolant or lubricating oil causes overheating and seizure of pistons and bearings. These types of faults can be detected from visual inspection, but measurement is usually needed before recommendations for machining or replacement can be made.

Piston

Assessing Wear After long service, engine components wear and it is often necessary to replace or repair by machining the worn components. The choice of action depends on the degree of wear.

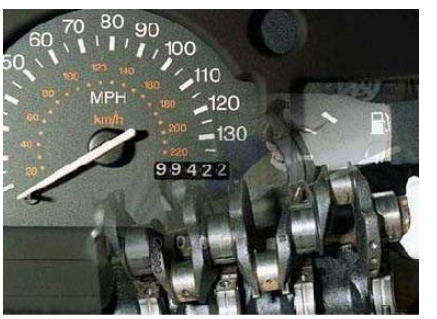

Engines wear after high mileage

Degrees of Wear This section looks at engine components and how to assess for an appropriate repair procedure for different degrees of wear. Engine manufacturers' specifications and tolerances must be used.

Camshaft

Measuring Equipment Accurate measurement is required and careful use of measuring equipment needed for this. The study of the measurements section in the introduction learning program should be completed before carrying out tasks in this section.

Micrometer

Premature Wear When premature wear or damage has occurred, the cause of the wear or damage must be determined and fixed. Premature wear usually will be caused by a lubrication problem such as use of an incorrect type or grade of oil, low oil level, overdue oil changes, sludging, or blockage or failure of the oil pump. Check all of these possibilities before and during engine component inspection. Refer to the engine lubrication learning program for details of these inspections.

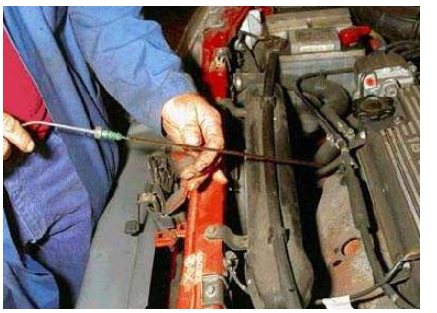
Check why wear has occurred

Discuss With Driver and Manufacturer Damage and premature wear may be caused by poor driving techniques, incorrect adjustments, and manufacturing defects. Discuss any of these problems with the driver and the manufacturer's representatives. Reporting problems to manufacturers will help them to improve their products.

Keep the driver informed

Special Equipment Some special diagnostic and measuring equipment will be needed when carrying out engine mechanical diagnostic and repair work. Refer to manufacturers' workshop manuals and data books for precise instructions on the applications and uses of these additional tools. Engine diagnostic center, vacuum gauge, cylinder compression and leakage tests provide an indication of possible component defects. Special dyes for locating cracks in castings are available and should be used when recommended and in accordance with the dye manufacturer's instructions. When measuring a cylinder or piston or bearing journal, three aspects of wear need to be investigated.

Check is special equipment is needed

Taper, Ovality and Barreling These are taper, ovality, and barreling. Measurements at appropriate positions are used to identify these conditions.

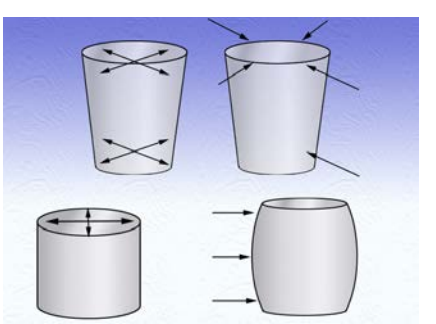
Exaggerated wear of a cylinder

Determine Taper and Ovality Two measurements at right angles to each other are made at each end of the cylinder or journal. To determine taper and ovality, the dimensions are compared. Different dimensions at each end indicate taper, and different dimensions at right angles to each other indicate ovality.

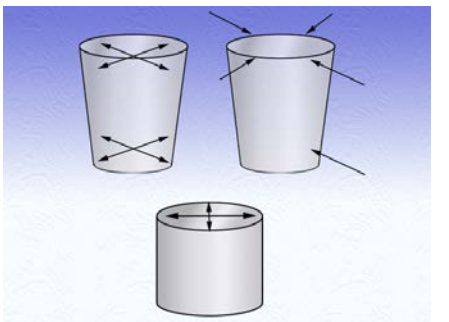

Measurement positions

Barreling An additional set of dimensions at the center of the cylinder or journal are required to determine barreling.

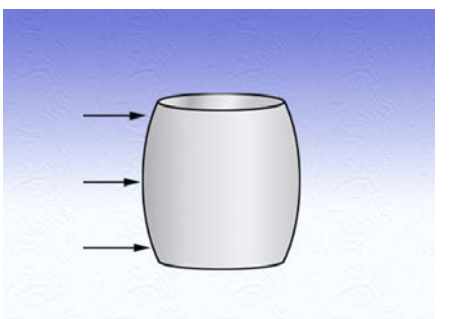

Other measurement positions

Cylinder Head Inspect cylinder heads for condition and gasket surface for distortion. Inspect valve, seats, spring, guides, stem, valve spring retainers, etc. The cylinder head must be thoroughly cleaned before inspection. Clean all carbon deposits from the combustion chambers and valve ports and then wash in a paraffin bath to remove oil and other dirt.

Cleaning the head

Gasket Surfaces Check the gasket surfaces with a straight edge and feeler gauges. Compare any distortion with the manufacturer's tolerances. Check the head-to-block deck face along the length and across in a number of places and also check the diagonals.

Deck face

Machining Any distortion outside of the specified tolerances will require machining. Check the manufacturer's data for the acceptable amount of material that can be removed. Removing more than the permitted amount of material will increase the engine compression ratio and cause engine running problems.

Valve Guides and Valve Seat Inserts Check the valve guides and valve-seat inserts for wear and security. The valve stems can be used to assess valve guide wear. Visually check the valve stem for wear; measure with a micrometer if required. Check that the stem is straight on a surface table or in a drill chuck. If the valve stem is straight and close to the original diameter it can be inserted into the valve guide and rocked to find valve guide wear. A special bore gauge is available for measuring valve guide internal diameters.

Checking the valve stem

Valves, Collets, Springs Etc. Check the fit of the collets onto the valve stems and into the valve spring retainers. Visually check the valve springs for condition and measure the free length. Compare with the manufacturer's specifications. Where the spring has to be compressed to a specified load before measurement, follow the manufacturer's procedures.

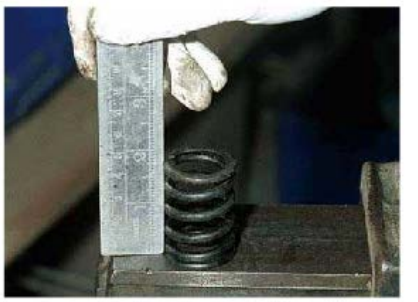
Checking the valve spring

Visual Inspection Check the fit of the collets onto the valve stems and into the valve spring retainers. Visually check the valve springs for condition and measure the free length. Compare with the manufacturer's specifications. Where the spring has to be compressed to a specified load before measurement, follow the manufacturer's procedures.

Valve details

Valve Seats Burnt areas where gas is escaping during combustion show as black tracks or in severe cases the metal of the valve or seat has been burnt away. Where damage to the valve seat has occurred, look very carefully for cracks radiating from the burnt section. Other cracks or burns that are likely to be found in cylinder heads run between valve seats or combustion chambers. Look carefully at these areas.

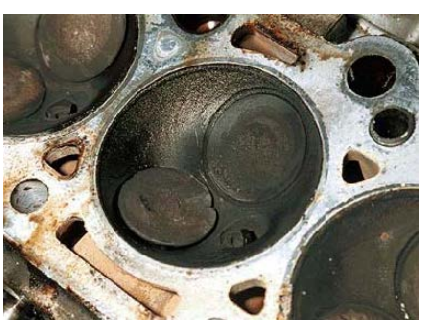
Valve seats

213. Worksheet Inspect rocker shaft and pedestals

Rocker

Valve Gear A general inspection of the rockers and shaft can often be carried out before removal of the shaft. The rockers will slide on the shaft so that the bearing surface can be inspected for wear. By slackening the valve clearance adjustment it is possible to rock or twist the rockers on the shaft to check for excessive bush wear. If possible, with the engine running check the oil supply to the shaft and to all rockers.

Shortage of Oil Shortage of oil to any rockers will cause abnormal noise and premature wear. A lack of oil supply can be caused by loss through worn components, a partially blocked circuit or low oil pressure.

Rockers

Rockers and Shafts In order to inspect the rocker contact face with the valve and to measure the shaft and rocker bushes for wear, the shaft has to be removed and stripped. Look at the rocker contact faces for undercutting and the adjusting-screw contact cup or dome and the push-rod ends for pitting or breakdown of the surface hardening.

Steel rockers

Pressed Steel Rockers For inspecting pressed steel rockers that are mounted on studs, remove the securing and adjusting nut, pivot ball and rocker. Look at the surface condition of the ball and rocker. It is possible for the rocker to wear and fracture below the ball face. Look at the contact faces for the valve and push rod, for pitting or breaking of the surface hardening.

Torque with care

Adjusting Nut Check that the required minimum torque has been applied to the adjusting nut when fitted to the stud thread. The studs can be replaced with an oversize stud on some engines. Follow the manufacturer's instructions for this. Check on reassembly that all rockers have a full oil supply.

214. Worksheet Inspect Cam Followers, Shim Adjust Tappets and Hydraulic Tappets

There are three areas on all cam followers or tappets that should be inspected. The outer side walls of the cam followers or tappets and the bores in the engine block or cam housing should be closely inspected for uneven wear patterns. Hold each cam follower or tappet in its bore and rock to check for wear. These are normally a push fit with very little noticeable free play.

Cam follower

Rubbing Surfaces Inspect the rubbing surfaces or rollers that contact the cams and the contact faces for the push rods or valves. Look for pitting and breakdown of the surface treatment. Look at hydraulic tappets in the same areas and then inspect the hydraulic components in accordance with the engine manufacturer's instructions. Some hydraulic tappets can be stripped to inspect the plungers, springs, and valves.

Contact areas wear

215. Worksheet Inspect Chain Drive Mechanisms

Chains and sprockets can be inspected in-situ (without removal) and after removal. The two main areas of wear are in the chain rollers and on the sprocket teeth. The rollers wear both internally between the pin and roller, and externally between the roller and sprocket teeth. This wear allows the chain to increase in length when it is pulling. When worn the chain becomes loose on the sprocket teeth. This is visible as a poor fit and kinking of the chain links around the sprocket.

Drive chain

Sprocket Teeth Wear on the sprocket teeth alters the tooth profile and the round shape of the indent between the teeth becomes elongated. The teeth become thinner and eventually bend in the direction of pull. Look for these defects when inspecting sprockets. Look also at the securing and locating devices for loose fitting, elongation or cracks radiating from holes.

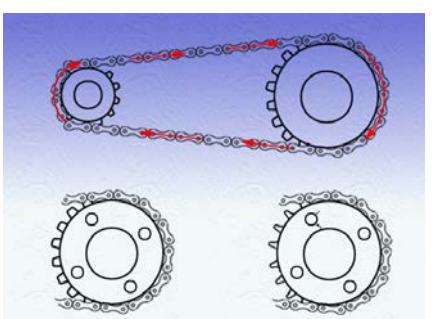
Chain drive sprocket teeth

Timing Chain When the chain is removed hold it on its side so that it is free to bend. A large degree of bend indicates wear of the rollers. Check all links and rollers for seizure, cracking or looseness of the roller-pin riveting.

Chain wear test

216. Worksheet Inspect Toothed Belt Drive Mechanisms

Toothed drive belts have two profiles: trapezoid and round. These are not interchangeable and should be matched to the correct profile drive gear. The drive belt is made from a rayon belt with reinforced rubber teeth. The direction of rotation will be marked or should be marked before removal. Once in service the belt beds to the direction of rotation and this must not be changed. Wear and deterioration of the belt is expected, and routine changes are included in the service schedule.

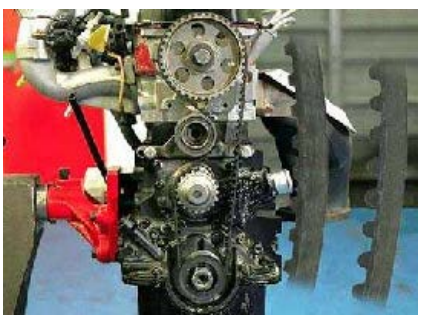
Belt profiles

Timing Belt At service inspection intervals, look for fraying of the rayon plies, cracking at the tooth bases and tension. A small amount of slack or over tightening can lead to premature failure. Look for oil leakage onto the belt and gears. This must be corrected and a new belt replaced because oil will damage the rubber and cause premature failure. Replacement of the belt should be carried out at the prescribed mileage or time intervals and at any time a defect is found. The gears are inspected for tooth condition, fracture, security, and location.

Belt tensioner

217. Worksheet Inspect camshaft lobes, journals and bearings, inspect auxiliary shafts, bearings, and drive mechanisms.

Camshaft lobes can be inspected directly or by performance. On a side camshaft OHV engine, it is possible to check the amount of lift of each cam with a dti (dial test indicator) on the end of the push rod or rocker.

Cam

Camshaft Lobes and Bearings OHC engine cams can be inspected and measured in-situ (without removal) after removal of the cam housing cover. By measuring all cams and comparing with each other and the manufacturer's specifications, any wear can be detected. A close inspection for surface wear and damage to the bearing journals, cams, and worm gears can be carried out after the camshaft has been removed. Measure the end float before removal and inspect the thrust plate and camshaft thrust face after removal for wear and scoring.

Cams in position

Cam Lift The cam lift can be measured by setting the camshaft on oiled paper in vee blocks on a surface table. Use a dti to measure the cam lift from the back of the cam to the peak of the lobe.

Check lift with a DTI

Cam Bearing Journals Inspect the cam bearing journals for scoring, pitting or signs of surface breakdown. Look at the bearings in the engine block or cylinder head for wear, location or other deterioration. The journals can be measured with a micrometer and the bearings with a bore gauge. The bearings of side camshaft OHV engines are smaller at the rear of the engine. Compare the journal and bearing dimensions for clearances and compare with the manufacturer's specified tolerances. Look closely at the cams for surface wear.

Bearings on the cam

Worm Gear Drives Inspect the worm gear teeth for chips and surface wear. Look at the meshing gears on the oil pump and distributor at the same time. Auxiliary shafts have similar fitting arrangements and are inspected in a similar way.

Oil pump drive

Cam Drive Mechanisms Use the drive chain and toothed belt worksheets for inspecting the drive mechanisms. Where gear drives are used inspect the backlash between the teeth in a number of places before removal. After removal check the teeth for chips and surface wear. Where self-adjusting backlash gears are used, check the springs between the two gear halves for condition, tension, and security.

Cam drive gears

Components Most components of the engine lubrication system are located inside the engine. Exceptions are oil coolers and feed pipes to ancillaries (such as brake servo vacuum pumps on diesel engines and turbo and superchargers).

Gear pump

Engine Condition The performance of the lubrication system is dependent on the mechanical condition of the engine. The oil pump has a flow rate that is sufficient for slow engine speeds and normal wear of engine components.

Engine Wear Investigations All investigations of engine wear must include inspection of the lubrication system to find out if poor performance has contributed to the wear or to ensure that the system can continue to provide protection for the service life of new engine components.

Inspecting Components Outside of the Vehicle The main investigations look at the oil feed and pressure from the pump and pressure relief valve, the loss of oil pressure through internal leaks, the lack of oil circulation due to blockages in the small oil drillings and galleries in the engine and the loss of oil through external leaks.

Gauge

Pump

Inspections off the Vehicle
Inspection and measurement of many of the components can be carried out off the vehicle.

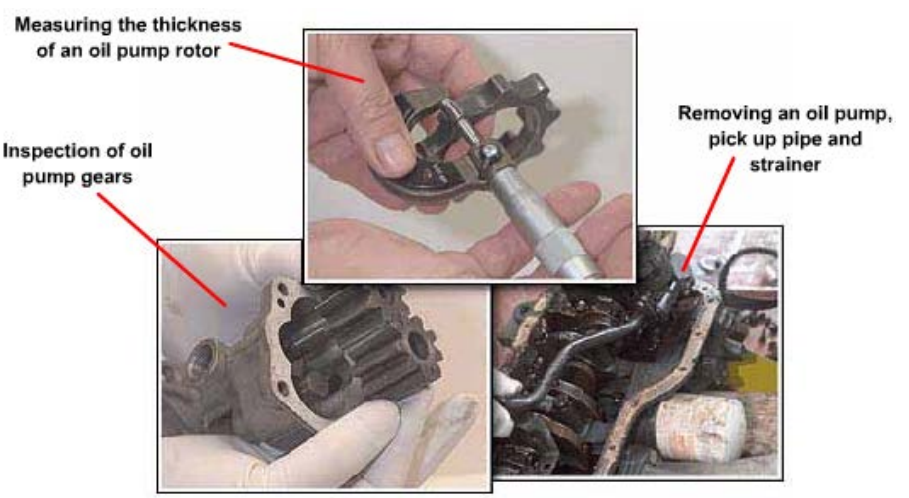

Inspection tasks

Diagnostic Tools There are very few specific items of diagnostic and measuring equipment for engine lubrication systems. The main diagnostic tool is a pressure gauge and the adapters that fit into the oil pressure switch's threaded drilling into the main oil gallery. All other checks are carried out with general workshop measuring equipment.

Feeler gauges

Pressure gauge

Micrometer

218. **Worksheet** Inspect oil pumps and pressure relief valves

Inspections These inspections may be required as a routine part of engine repair operations or be required following abnormal oil pressure readings during a system pressure check.

Check housing

Strainer

Causes of Low Oil Pressure Always remember that low oil pressure can be caused by two very different problems. These are the lack of a delivered oil flow and consequent low pressure, which is an engine lubrication fault; or the loss of oil internally in the engine, which is an engine mechanical fault. Worn crankshaft shell bearings are a typical example. (See the Engine Mechanical topic).

Work crank

Worn shells

Oil Pumps The oil pump can be stripped, inspected and measured after removal from the engine. There are always running clearances in oil pumps and wear is minimal. Therefore, it is important to obtain manufacturer's specifications and tolerances for comparison with the measurements that are made to check for wear.

Oil Pump Checks The first check is carried out before stripping the pump. This is the measurement of end float in the drive shaft.

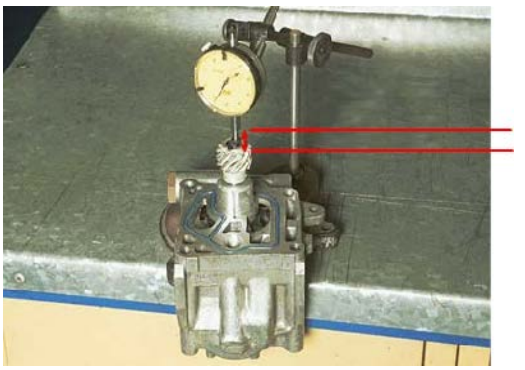

DTI used to check end float

Visual Inspection for Scoring After stripping, a visual inspection for scoring of the pump body and end cover is made. The next check is for the running clearances of the gears, rotors or vanes. Follow the manufacturer's instructions for these checks.

Check the pump

Pressure Relief Valve The pressure relief valve may be integral with the oil pump or be in the engine block. In both cases, undo and remove the cap over the spring and plunger of the relief valve. Remove the spring and check the tension and free-length dimension with the manufacturer's data. Inspect the plunger and seat-sealing faces for pitting, undercutting or other signs of poor seating.

Valve components

Full-Flow Filter Circuits All full-flow filter circuits incorporate a filter blockage valve. This valve is often fitted into the base of a canister filter and is renewed with the filter.

Pressure Relief-Valve Test Where the valve is located in the filter housing, check that oil cannot flow freely through the valve at low pressure but can if the pressure is increased. A low-pressure oil can with a pump, may be used for this test.

Oil Pick-Up Pipes Oil pick-up pipes must have airtight joints in all positions. These are provided by gaskets or 'O' rings. Check all matching faces for condition. Replace gaskets and 'O' rings on reassembly. Check the pipe for fracture at joints and bracket locations.

Pipe seal

Oil Strainers The oil strainers sit in the oil in the oil pan and provide the first level of filtering for the oil. They should be thoroughly cleaned and inspected for damage or blockage of the wire mesh. Many strainers have blockage bypass valves. Check that these are clear and able to operate if needed.

Fitting the strainer

Reassembly and Lubricating of Parts Inspect before reassembly, to ensure that all components are cleaned of any loose dirt or gasket material. Lubricate the oil pump and relief valve components with clean engine oil during assembly.

Gasket

219. Worksheet Inspect Oil Sealing Devices

This task is looking for the causes of oil loss from these components. The flatness of mating faces is important for good sealing. If gasket leakage has occurred, check the mating faces with a straight edge and feeler gauges or by sight.

Inspect Gaskets and Seals Check that the correct gasket has been fitted and that a sealant has been used if this was specified.

Use the correct gasket

Bolt Thread Leaks Leaks through bolt threads can occur if a sealant has not been used. Be careful with oil-circuit components to ensure that excess sealant does not enter the system.

Sealant may need to be applied to the bolts

Oil Seals on Shafts Oil seals on shafts will wear. The lip is spring loaded to take up the wear. When leakage occurs check that the seal land has not been undercut by the seal lip. Repair or replacement of the rotating component will be needed if this has happened. The seal lip of new seals should be lubricated with clean engine oil before fitting.

Seals

220. Worksheet Inspect Oil Galleries and Drillings in Engine Components

These inspections are carried out during engine strip-and-rebuild operations or when a lack of oil occurs in one part of the engine. The oil drillings shown in this diagram are typical of all engines.

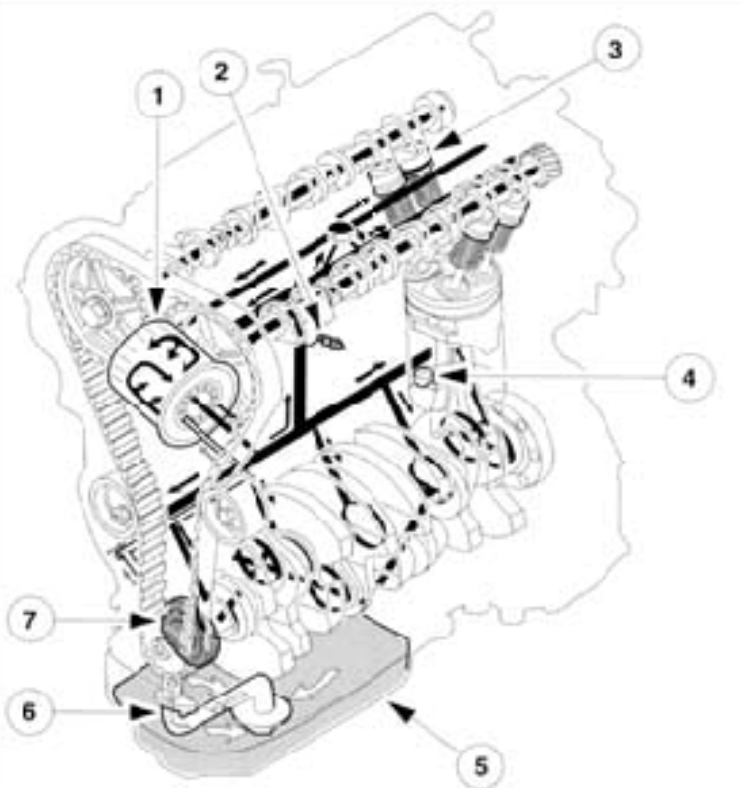

Lubrication system

Checking Drillings for Blockage Many of the drillings can be looked through to check for blockage. Where this is not possible, use a cleaning tank solvent pump to provide a liquid flow through the oilway. This inspection is usually included with the cleaning operation. All drillings and galleries must be cleaned and checked following any engine machining operations.

Check the drillings

Pressure Test All components in the cooling and in-car heating system must be able to retain the coolant. They can all be checked on the vehicle by carrying out a pressure test and observing for coolant leakage. Any leakage will be shown on the pressure tester pressure gauge, which should remain at a constant pressure for at least one minute.

Pressure test

Pressure tester gauge

Pressure Drop Any drop in pressure on the tester gauge will need to be investigated. However, first ensure that the tester is making a good seal where it is fitted to the system filler neck.

Visual Checks Follow this with a visual check under the heater inside the car. Any loss of coolant from the heater core (heat exchanger) will be visible as a wet patch on the carpet and will have a distinct odor. Any leak that cannot be seen externally may be hidden. Check the core plugs inside the clutch cover and around the engine.

Checking inside vehicle under heater

Core plugs and gasket leak points

Internal Leaks Engine internal leaks can be detected by setting the pressure tester to about half of the system operating pressure and then running the engine. A rapid rise in pressure would indicate an internal leak into the combustion chambers or cylinders.

A rapid pressure…

… Rise on gauge indicates a fault

Exhaust Gas Detection Fluid Small leaks may not be detectable by this method. Therefore, and the use of an exhaust gas-detection fluid container attached to the cooling system pressure tester may be needed to measure contamination in the coolant.

Inspection and Measurement Inspection and measurement of many of the components can be carried out after they have been removed from the vehicle. These tests are used to look for mechanical wear, blockage of narrow coolant passages and the deterioration of rubber-based components such as hoses and seals.

Water pump hoses and thermostat

Diagnostic and Measuring Equipment There are very few items specifically used for diagnostic and measuring the engine cooling system. Refer to the manufacturer's workshop manuals and data books for precise instructions on the applications and uses of these additional tools.

Manuals and measuring equipment

Pressure Tester The cooling system pressure tester is both a diagnostic tool and a measuring instrument. Its use as a tool is to aid in the detection of coolant leaks by producing the operating pressure in the cooling system that replicates normal running. Any leaks will reduce the operating pressure and then be identified.

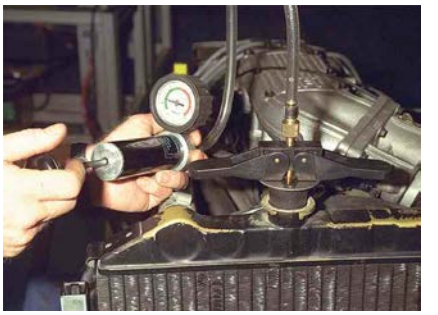
Pressure tester in use

Head Gasket Blows A pressure tester is also used to detect the sharp rises in pressure that occurs when a cylinder head gasket blows or when a crack in the water jacket allows combustion pressure to enter the system. It is further used as a measuring tool to check the operating pressure of the radiator pressure cap.

Test Liquid An attachment to the pressure tester is used to detect leaks of combustion gas into the cooling system. The tester consists of a container holding a test liquid through which the air in the top of the radiator is passed when the engine is running. The test liquid changes color from blue to yellow if combustion gas is present. It stays blue if no gases are detected.

Exhaust gas detection kit

Antifreeze Percentage The antifreeze content can be measured with a range of hydrometers. These are all for ethylene glycol-based antifreezes and are not suitable where other substances have been used.

Ball Hydrometer The ball-type antifreeze tester consists of a set of balls that float in a drawn-off sample of coolant. The number of balls floating in the sample indicates the antifreeze percentage solution. Refer to the manufacturer's data for information on interpreting the hydrometer reading.

Simple ball type hydrometer

Float Hydrometer A standard float type hydrometer is also available. This draws off a sample of coolant. The float level is marked to indicate the percentage of ethylene glycol in the coolant. Some of these hydrometers have a built-in thermometer for the coolant temperature and include a correction chart for the actual float reading against the coolant temperature.

Float type hydrometers are the most accurate

Drive Belt Tension The water pump and fan drive belt tension can be measured and adjusted with the use of a belt tension gauge. Many manufacturers recommend the use of these gauges for accurate adjustment of belt tension.

Belt tension gauge

221. **Worksheet** Reverse flush and test the radiator flow rate. Inspect hoses.

This test is likely to be necessary when a radiator is old or has been filled with dirty water or when internal corrosion of hoses or the engine block has lead to a buildup of sediment in the cooling system. Most of these problems are caused by a lack of regular maintenance.

Sediment in the radiator may result in the need for serious repairs!

Radiator Checking It is possible to identify areas on a radiator that may be blocked internally. When the engine is at normal operating temperature the thermostat opens and coolant flows through the radiator. By running the palm of a hand over the outside of the radiator, it is possible to feel differences in temperature from one area to another. Cool areas in any position on the radiator are likely to indicate poor circulation through the coolant tubes in that part of the radiator.

Checking the radiator for cool spots…

…And hot spots

Periodic Cleaning Periodic cleaning at intervals when the coolant is replaced is a sensible action for preventative maintenance. The procedure is straightforward. It requires an outside area with a drain and a water hose. High pressure is not required.

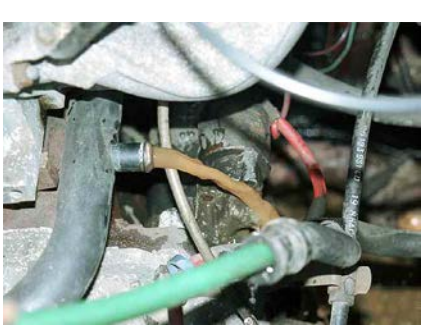

Reverse flushing the cooling system

Coolant The old coolant containing ethylene glycol should be drained off into a drain tray and disposed off in accordance with environmental regulations.

Drain plugs are fitted to some radiators

Draining the coolant

Bottom Hose The radiator bottom hose may have to be removed from the water pump to drain the coolant. Removing the pressure cap from the top of the radiator will help the coolant drain out better. Where a remote expansion tank is fitted, it may be necessary to remove the top hose from the radiator or thermostat housing.

Radiator bottom hose removed

Radiator cap

Remote expansion tank

Radiator

Flushing Connect the water hose into the radiator bottom hose, seal with a wedge of cloth and run the water supply until the water runs freely and cleanly from the top of the radiator. Any restriction in the radiator will slow the flow rate. This can be judged by simple observation.

Mains water connected to hose

Clean water running out of top hose

Refilling Fill the system with new coolant after flushing, carry out checks to ensure that the cooling system operates correctly and clean the vehicle before returning it to the customer.

New coolant being added

222. **Worksheet** Inspect water pump.

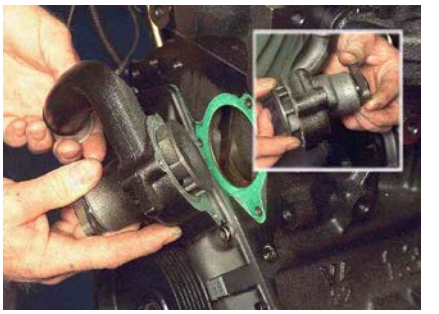
Water pump inspection

This task may be required to identify a localized abnormal noise or be a check on a stripped engine to ensure that the pump is serviceable before refitting. It is sometimes necessary to remove the water pump to check that the impeller has not come loose on the spindle. This can cause an overheating problem that is difficult to detect.

Water Pump Bearings Follow the manufacture's instructions for removing the water pump and then check the bearings for wear and tear. Inspect the seals that retain grease in the pump bearings and prevent coolant from leaking from the engine.

Checking water pump bearings

Pulley and Impeller Check at each end that the pulley flange and impeller are secure on the spindle. Look for telltale signs of movement, which are likely to be fresh scores close to the flange or impeller. These components can be tight when cold but become loose as they heat up. Always apply a reasonable force to check for movement.

Checking security of pulley flange…

And impeller

Sealant Always ensure that on replacement all mating faces are clean and that new gaskets and seals are fitted. Apply a thread sealant to bolts that run into coolant passages.

Sealant on gasket and bolts

Summary Always ensure that the vehicle is clean before returning it to the customer. This will help reinforce that you have done a good job.

Read the previous section again and note down some key bullet points here:

-
-
-

Carry Out Visual Checks on Running Engines - Including Abnormal Oil Consumption Listen to running engine for abnormal noises. This check follows the stationary engine check and includes looking at the same components. Look at the stability of the engine in the mountings and listen for exhaust knocks to complete the check on the engine mountings.

Belt and tensioner

Exhaust Smoke Check the cooling system operation and the engine idle speeds when cold (fast idle) and hot. Watch the exhaust smoke for signs of water, white smoke, which is normal when cold but should cease very soon after the engine is started. Look also for excess fuel when the exhaust contains black smoke and for burning oil when the smoke is blue and has a distinctive odor.

Engine must be up to temperature for a smoke test

Abnormal Noises Check the cooling system operation and the engine idle speeds when cold (fast idle) and hot. Watch the exhaust smoke for signs of water, white smoke, which is normal when cold but should cease very soon after the engine is started. Look also for excess fuel when the exhaust contains black smoke and for burning oil when the smoke is blue and has a distinctive odor.

Check the engine revs

Carry Out Cylinder Balance Test This test is carried out with an engine analyzer or a tachometer and grounding the high tension to each spark plug in turn. It is a comparison of the loss in engine speed that results from one cylinder not being fired. Each cylinder is made to misfire and the drop in engine speed is recorded. The greater the drop in speed the more effective is that cylinder. An ineffective cylinder will have little effect on the engine idle speed and will not change the note of the misfire. This is a useful test to isolate and identify a misfiring cylinder. Further tests will be needed to establish the cause of the misfire, which could be a mechanical, ignition or fuel problem. Always ensure that the mechanical condition is good before inspecting for ignition and fuel faults.

Engine analyzer

223. **Worksheet Carry Out Cylinder Balance** Test

Check the specs…

Before carrying out this test, check with the vehicle manufacturer's instructions for any special procedures. Vehicles fitted with catalytic converters may be unsuitable for this test. In that case, other diagnostic procedures will be specified.

224. **Worksheet Carry Out Cylinder Compression Test**

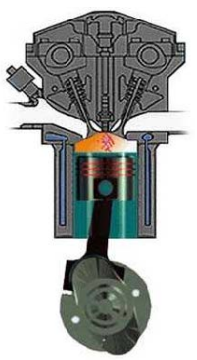
Compression is important

This test is used to check for mechanical faults. Loss of compression can be caused by poorly seated valves, piston and piston ring wear or damage, cylinder bore wear or damage and by poor engine aspiration.

Wet Test A wet test, in which a small drop of clean engine oil is pumped into the cylinder to seal the piston to the cylinder wall, gives an indication of where the loss of compression is being made. If it is from the valves, there is no change between the wet and dry test, but if the loss is from piston blow-by, the wet test will show an improvement in the recorded pressure. This indicates piston ring wear.

Engine Aspiration Engine aspiration is the flow of air through the engine. Incorrect valve timing and valve opening that occurs when cams become worn will show as low compression on the worn cylinders. A blocked air cleaner or exhaust will give low readings on all cylinders.

We all have aspirations…

Check for the Specified Tolerance Check that the results for each cylinder do not exceed the specified tolerance between cylinders – usually about 15 to 20 psi or 1 to 1.3 bars. Low readings, below 70 psi or 5 bars usually indicate valve defects. Readings above these may indicate piston ring wear or early signs of valve wear. Check valve clearances if low readings are found and then recheck results.

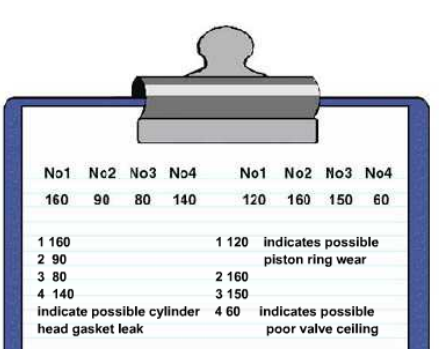

Check each cylinder

225. Worksheet Carry Out Cylinder Leakage Test

Leakage tester

This test can be used in place of a compression test as it indicates the loss of compression by listening for the leakage from the source of the leak. Air is pumped into the cylinder when the piston is at exactly top dead center (tdc). The rate of air pressure drop is measured by time and pressure drop to indicate if the engine condition is satisfactory. Any rapid drop in air pressure will also be accompanied by the sound of air flowing through the source of the air loss. Listen for air in the exhaust, an indication of exhaust valve defects; listen for air in the air-intake duct or carburetor, which indicates inlet valve defects. Piston blow-by can be heard in the rocker cover or from the dipstick tube.

226. Worksheet Carry Out Engine Vacuum Tests

It is important to check and adjust the ignition timing and the exhaust gas constituents for a correct air and fuel mixture, if possible, before carrying out vacuum tests. Follow the engine manufacturer's instructions for connection of the vacuum gauge.

Engine Speeds Carry out the series of tests at cranking speed, idle speed, on acceleration and engine overrun at about 2,500 rpm.

Test Results Record the test results and compare with data and diagnostic tables to interpret the results. Vacuum readings should be used in conjunction with other diagnostic tests and not be solely relied upon for diagnosis of faults.

Vacuum readings

Vacuum Gauge and Pump Unit A vacuum gauge is connected with a flexible hose to the inlet manifold where it is used to measure the drop in pressure (engine vacuum) in the manifold during different phases of engine performance. The vacuum readings are a measure of the effectiveness of the engine breathing and volumetric efficiency. Mechanical, air supply and exhaust system, fuel system and ignition system faults can be diagnosed from vacuum readings.

Vacuum and Pressure Pump and Gauge Vacuum is measured in inches or millimeters of mercury or in the SI unit of kilopascals (kPa). Two series of tests are made, one with the engine cranking, and the other with the engine running. During cranking a fluctuation of the needle occurs. If the swing is irregular it indicates problems with one or more cylinders, which would require a leakage or compression test to identify.

Measuring vacuum

Vacuum Readings Vacuum is measured in inches or millimeters of mercury or in the SI unit of kilopascals (kPa). Two series of tests are made, one with the engine cranking, and the other with the engine running. During cranking a fluctuation of the needle occurs. If the swing is irregular it indicates problems with one or more cylinders, which would require a leakage or compression test to identify.

Cranking Test This test may not be suitable for engines fitted with catalytic converters and for late emission-control engines on which the inlet manifold has many vacuum connections. When it is possible the test can indicate mechanical faults. Disconnect the coil, negative terminal and fuel injectors in accordance with the manufacturer's instructions to prevent the engine from starting and block off any vacuum pipes.

Ignition and fuel connections

Cranking Vacuum Engine cranking vacuum should be between 10 and 20 in. of hg, Depending on specification and should fall to zero when cranking is stopped. Where vacuum connections cannot be blocked off, lower readings of about 4 in. Of hg. Or less maybe normal.

Gauge readings

PCV System If problems with the PCV system are suspected, clamp the rubber pipes. This should give higher readings if the pipes are clear but no change if they are blocked. Cleaning or replacing the PCV valve, oil strainer, air cleaner and pipes should provide correct readings. If it does not, check and fix, as necessary, the inlet manifold gasket sealing, break servo and non-return valve, other vacuum operated units, valve guides and sticking valves, worn cam lobes or incorrect valve timing.

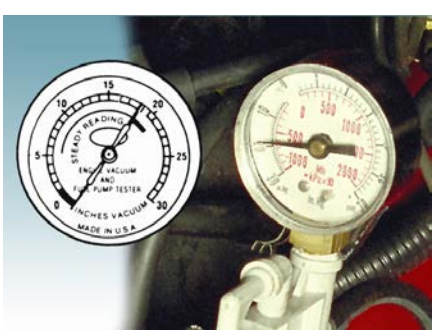

Vacuum gauges can be used to test the PCV system

Engine Running 💻 Tests at Idle Speeds If problems with the PCV system are suspected, clamp the rubber pipes. This should give higher readings if the pipes are clear but no change if they are blocked. Cleaning or replacing the PCV valve, oil strainer, air cleaner and pipes should provide correct readings. If it does not, check and fix, as necessary, the inlet manifold gasket sealing, break servo and non-return valve, other vacuum operated units, valve guides and sticking valves, worn cam lobes or incorrect valve timing.

Engine Running Tests with Sharp Acceleration and Deceleration from Idle
Quickly open and then close the throttle. The vacuum should initially drop to about 2 to 3 in. of hg (50 to 75 mm of hg) and then climb to a figure 5 to 7 inches (125 to 175 mm) above the idle reading during engine deceleration.

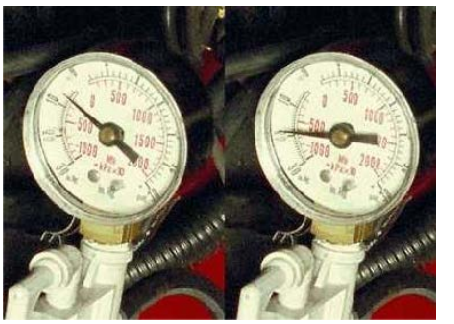

Acceleration test

Engine Running Tests at 2,500 Rpm Quickly open and then close the throttle. The vacuum should initially drop to about 2 to 3 in. of hg (50 to 75 mm of hg) and then climb to a figure 5 to 7 inches (125 to 175 mm) above the idle reading during engine deceleration.

Compare Readings Hold the speed for about a minute and observe the reading. If the figure falls slightly it indicates the possibility of a blocked or choked exhaust. Observe the readings on deceleration and compare with the deceleration to idle results from the sharp acceleration test. Both sets of results should be similar. Lower readings support the diagnosis of a blocked exhaust.

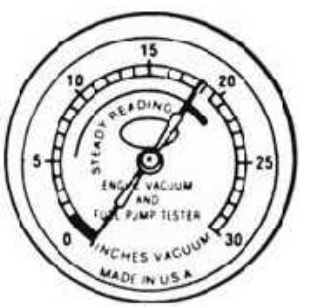

Double check any unusual readings

Vacuum Readings These diagrams of vacuum readings show some faults that can be detected with a vacuum gauge. Any diagnosis made with a vacuum gauge should be supported by other tests carried out with other instruments before final decisions on a range of possible faults are made.

Inspecting for Oil Leakage A visual inspection for oil leakage should look at all of the places where gaskets and oil seals are used. It is acceptable to tolerate a small amount of seepage of engine oil, which is necessary to lubricate the oil seals on the crankshaft and camshaft. When this oil is sufficient to drip, it is termed leakage and should be reported to the owner with a recommendation for repair.

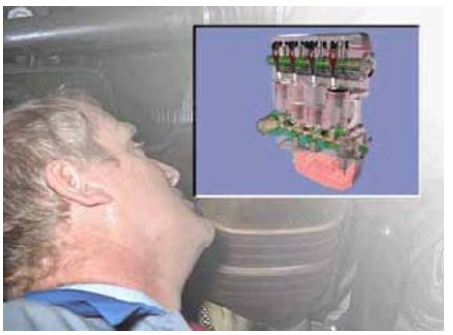
General inspection

Locating an Oil Leak Oil can leak from the gaskets, which seal the mating faces of covers, housings and the cylinder head as well as from old seals on shafts. It may be necessary to wash the engine in order to accurately locate an oil leak. Be careful when washing engines with electronic sensors as these can be affected by steam cleaning or high-pressure washing.

Head gasket

Oil seal

Exhaust Smoke Inspections 💻 A visual inspection for exhaust smoke can be made When the engine is running. Check the exhaust color at idle speed, at a mid-range speed and during the overrun from a blipped throttle. High oil consumption can result from leakage or from being burnt in the combustion chamber.

Oil in the Combustion Chamber For oil to enter the combustion chamber, it must either be forced up past the pistons or be drawn in through the inlet valves. Oil can be drawn into the combustion chambers when the piston and rings are excessively worn. Oil is drawn through the inlet valve guides by passing the inlet-valve stem seals when these and/or the valve guides are worn.

Causes of Blue Smoke Oil can be forced into the combustion chambers when the crankcase ventilation system is clogged and the crankcase pressure is high. Burnt oil produces a blue smoke, which can be seen in the exhaust. Repair of the engine or cleaning and repair of the crankcase ventilation system will be required to fix these problems.

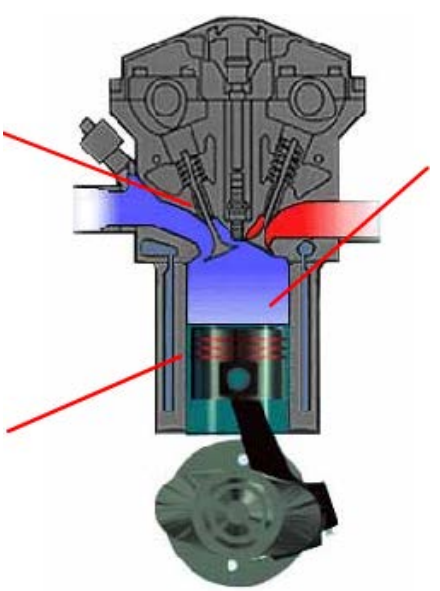
How oil gets in the combustion chamber

227. **Worksheet** Check operation of crankcase ventilation (PCV) system.

Smoke check

The first part of the inspection is looking at the exhaust smoke. This inspection is common to many other tests and should be carried out at all service intervals.

Air Intake to the Engine Next look at the PCV pipes and valves for condition, sealing and security. Check the air intake to the engine crankcase, which may be through the oil filler cap or from the air cleaner housing.

PCV valves and pipes

Check carefully at all times

Crankcase Gases The crankcase gases are vented through an oil separator, which must be cleaned at specified intervals. Blockage of the oil separator is a main cause of high crankcase pressures.

The oil separator must be clean

Air into the Inlet Manifold The PCV valve is a one-way valve that allows airflow to the inlet manifold. It can be removed for cleaning. It will rattle when shaken if the valve plate is free. Check the airflow in both directions. Air should flow toward the inlet manifold but not back. On engines that use a small orifice into the inlet manifold in place of a valve, check that the orifice is clear.

Keep the valve clean

Carry Out Oil Pressure Tests An engine oil pressure test is a good indicator of engine condition, particularly in respect to crankcase bearing wear, as worn bearings are unable to hold the pressure and low readings will usually be obtained. This test should be carried out on a rebuilt engine to ensure that the correct oil pressure is being supplied.

Low and High Oil Pressures Both low and high oil pressures can lead to premature wear of the engine. Low pressure starves the engine of oil and reduces lubrication under severe conditions. High oil pressure can cause erosion of the bearing surfaces. Engine oil pressures are set during the engine design stage and are based on the types of materials used for the bearings and other relevant factors.

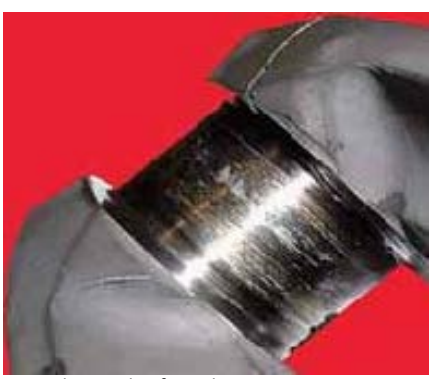
Big end journal– after oil starvation

Big end shell – after oil starvation

Engine Pressures The specific pressure for any engine can be obtained from workshop and data manuals.

Pressures at Different Engine Speeds Read and record the pressure at idle and then increase the engine speed until a steady reading is given. Record the engine speed and oil pressure. Compare the measured data with the engine manufacturer's data.

228. **Worksheet** Inspect the drive belt condition and tension.

Damaged belt

Multi-vee belts

Inspect the water pump bearings and seal for wear and leakage. Check the operation of the cooling fan and airflow through the radiator. Always look closely at drive belts for signs of fraying, cracks, glazing on the drive faces and for other deterioration. Old drive belts feel solid when they are cold but can become elastic when hot. Check the belt under normal operating conditions with the engine hot.

Belt Tension Check the tension on the longest side. For vee belts, a pull of about 13 mm, (or an inch) is normal. Over tightening can damage the water pump and alternator bearings. Under tension can cause the belt to slip. A squeal from the belt when the engine is accelerated indicates slack drive belt tension.

Checking belt tension

Multi-Vee Belts Multi-vee, or ribbed belts, and toothed camshaft drive belts will twist through about 90° if they are correctly adjusted. However, always refer to the manufacturer's data for the correct tension, and the checking and adjustment procedure.

Water Pump Noise Listen for a whine from defective water pump bearings when the engine is running. Use a stethoscope to locate the noise, if necessary.

Stethoscope test

Water Pump Bearings Another check is to grasp the water pump spindle drive pulley and rock it to feel free play in the bearings. There should not normally be any free play. Look closely at the underside of the water pump for signs of leakage.

Cam Belt Driven Pumps Where the water pump is hidden underneath a belt cover, check whether the owner or driver has noticed a coolant loss. Carry out a long pressure test and look for coolant dripping from behind the cover.

Motor Bearings Disconnect the battery ground before checking the fan and bearings of electrically driven fan motors. The check is made by rocking the fan and feeling for free play.

Battery disconnected for safety…

Cooling Fans Look closely at all fans for damage to the blades and for correct attachment to the hub. A fan that is out of alignment or balance will create vibration and premature wear of water pump or motor bearings.

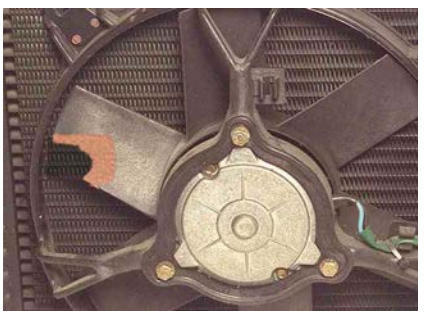

Fan blade damage

Airflow With the engine is running, check that the airflow from the fan is correct. For viscous hub fans, the airflow when the engine is hot should be greater than when the engine is cold. For electrically driven fans, the switch should start the motor when the engine temperature is slightly above normal.

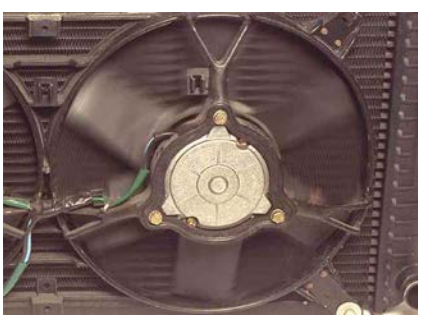

Fan rotating

Radiator Look through the airways in the radiator core to check that they are not blocked with dust and dirt. If necessary, blow back through the radiator core with an airline to remove dead insects and other material.

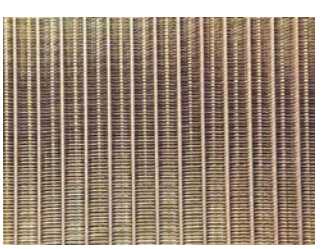

Radiator core

Air line blowing through radiator core

229. **Worksheet** Check the system operating temperature and check the thermostat opening temperature.

Feeling top hose temperature

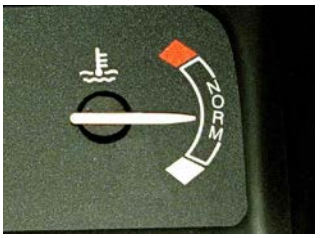

Temperature gauge

When the engine is started from cold, the coolant should not circulate through the top hose. Feel the hose during the warm phase and check that it remains cool. Compare it with the heater hoses, which should heat up gradually as the engine warms up. When the engine reaches operating temperature, the thermostat should open and allow the coolant to flow through the top hose into the radiator.

Thermostat Checking The thermostat can be checked after removal from the engine. The thermostat is placed in a tester, which has an electric heater element and thermometer in a container of water. The water is heated until the thermostat opens. The temperature reading on the thermometer indicates the opening temperature. This can be compared with the specifications stamped on the thermostat and given in the manufacturer's data.

Thermostat test

Renew if in any doubt

Summary All faults should be reported to the vehicle owner or driver, and recommendations for any further work should be given. Always ensure that the vehicle is clean before returning it to the customer.

Read the previous section again and note down some key bullet points here:

-
-
-
-
-

Heating and Air Conditioning

Safety, tools & equipment and customer care

Health and Safety

Safety First Before carrying out any service or repair work, refer to all appropriate health and safety guidelines. Always follow all safety procedures and observe safety precautions when working on vehicles. Some specific hazards are listed in this section. General safety advice is also included.

Asbestos Many types of brake-lining material and friction discs contain asbestos fibers. Always follow safety precautions when handling asbestos.

Breathing mask in use

Running Engines 💻 Running engines are sometimes needed for diagnostics and system checks. A running engine presents two hazards: the first is the risk from rotating components and the second from the accumulation of exhaust gas in the workshop. Watch out for rotating parts such as the fan, belt and pulleys in the areas where you are likely to be working.

Electrically Driven Fans 💻 An electrically driven fan is switched on automatically when the temperature of the coolant in the radiator rises above the switch operating temperature. This can occur even when the ignition is switched off. During diagnostic tests, always keep fingers out of the fan cowl and always remove the battery ground cable when the engine does not need to be running.

Exhaust Emissions When running an engine, it is important to prevent the build-up of exhaust gas in the workshop. Use extraction equipment or provide good ventilation.

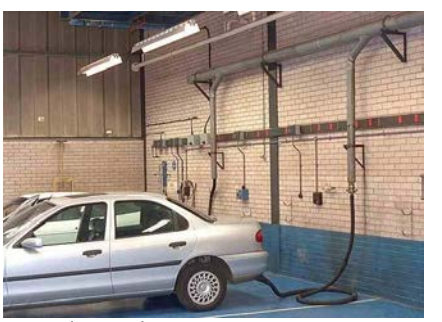

Extraction equipment

Hot Components When used for prolonged periods, vehicle components can become very hot. In particular, be careful not to touch the exhaust when working under the vehicle or on the engine.

Be aware of hot exhausts

Protective Clothing Overalls should be worn at all times. This protects your clothes as well as your skin. Gloves, goggles, breathing masks, hats and strong footwear may also be necessary.

Personal protective equipment in use

Working Below Vehicles There are a number of hazards to avoid when working below vehicles. One is the risk of hitting your head, which can obviously cause injury. Another risk is the possibility of getting rust and dirt in the eyes. Avoid these problems by wearing a bump cap and goggles whenever working under vehicles. The vehicle must always be supported safely before working underneath or alongside it.

Car on a ramp

Heavy Loads A risk may be experienced if a task requires the lifting and moving of heavy loads. Many vehicle components fall into this category. Always tackle these tasks in an appropriate manner by ensuring the use of the recommended lifting equipment. Ask for assistance if necessary.

Compressor

Jacking and Supporting Only use the recommended jacking and support points when lifting a vehicle. Refer to the manufacturer's instructions if unsure. Ensure the jack and support stands, which must be used at all times, have an appropriate safe working load (SWL).

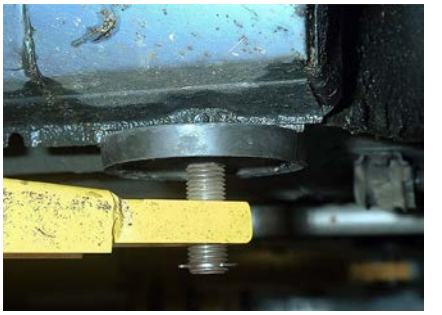

Jacking points

Skin Contact When servicing vehicle systems, avoid skin contact with new and used engine oils. Use barrier cream or non-porous gloves. Be careful with hot oil, particularly when carrying out oil draining operations. Never keep oily rags in overall or other pockets and change out of oil-contaminated clothing as soon as reasonably possible.

Wear gloves or use barrier cream

Caution/Attention/Achtung! All types of fuel – and particularly the vapors – are highly flammable. They can be ignited from a number of sources. Any naked flame, a short circuit, a cigarette or, under the right conditions, even a hot object will start a fire.

Electrical Sparks Electrical sparks are the most common cause of vehicle fires in the workshop. These can occur during the connection and removal of electrical terminals. Sparks also occur when the engine is cranked with the ignition on and the spark plugs removed. Disconnect the coil or connect the HT cables directly to ground to prevent this.

Short Circuits If a wire or tool is allowed to join the battery's positive connection to the negative connection, a serious short circuit will result. A wire would become extreme hot and, in addition to the obvious fire risk, would burn through whatever part of your body it was touching it. Trained fire experts carried out the demonstration shown Here. Do NOT attempt to copy it. The same results occur if shorts are made on the vehicle. Be careful.

Original Equipment In consideration of other people's property, always be careful to use approved parts. Original equipment manufacturers' (OEM) parts may be required to meet safety regulations.

Orifice tubes

Air Conditioning Where vehicles are fitted with air conditioning, it is important that no refrigerant pipes or hoses are undone or disconnected unless the system has been emptied by a competent and authorized person. Two types of refrigerants are used: R12 and R134a; these cannot be mixed. They are harmful to the environment and present a severe risk of freeze damage to skin and flesh.

Air conditioning components

Refrigerant Refrigerants used in air-conditioning systems are dangerous. If they come in contact with the skin, they produce severe frostbite. Wear protective goggles and gloves at all times. Use gloves designed for the purpose; leather or fabric gloves are NOT suitable. If refrigerant is exposed to flames or hot surfaces, it produces toxic gases. Always ensure adequate ventilation when working on air-conditioning systems.

Air conditioning equipment

Pressurized Cooling Systems If work has to be carried out on the vehicle heater or the cooling system, there is a risk of scalding. The coolant is run at a pressure higher that atmospheric. If the cap is removed when hot, the coolant can boil instantly, spraying boiling water and steam.

Over heated radiator

Antifreeze Ethylene glycol is a skin irritant and toxin. It is harmful to the environment when it can seep into underground water supplies. Handle ethylene glycol with care. Avoid skin contact by wearing rubber or latex gloves and goggles; wash any spills immediately. Read the data sheet that is available from the suppliers of the product. The disposal of waste coolant and ethylene glycol is subject to strict environmental regulations in many countries.

Danger

Antifreeze container

Antifreeze Disposal Antifreeze must not be poured into sewers or onto the ground. Check with the appropriate environmental protection agency in your area for the correct disposal procedures.

Dispose of antifreeze carefully

Read the previous section again and note down some key bullet points here:

-
-
-
-
-

Tools and Equipment

Introduction Components will usually be removed, inspected and repaired or replaced when a defect has been diagnosed. Other components are replaced, or stripped and cleaned, at scheduled mileage or time intervals. Refer to the Routine Maintenance section for details on these items.

General Toolkit General tools and equipment will be required for most tasks. As your career develops, you will build a collection of tools and equipment.

Snap-on tools

Torque Wrench A good torque wrench is an essential piece of equipment. Many types are available but all work on a similar principle. Most are set by adjusting a screwed cylinder, which forms part of the handle. An important point to remember is that, as with any measuring tool, regular calibration is essential to ensure it remains accurate.

A torque wrench is a useful tool

Air Guns The whole point of power tools is that they do the work so you don't have to! Most air guns have an aluminum housing. This material is lightweight but provides long life. Air guns produce a 'hammer' action. Because of this, impact sockets should be used. Normal sockets can shatter under this load. It is important to remember that air tools need lubricating from time to time.

Jacks and Stands Most jacks are simple hydraulic devices. Remember to make sure the safe working load (SWL) is not exceeded. Ensure that any faults with equipment such as this are reported immediately. Axle stands must always be placed under the vehicle supporting the weight – before work is carried out.

Always use stand after jacking a vehicle[5]

Ramps and Hoists Many ramps are available ranging from large four-post, wheel-free types to smaller single-post lifts. These large items should be inspected regularly to ensure they are safe.

Four post lift in use

Bearing Puller Removing some bearings is difficult without a proper puller. For internal bearings, the tool has small legs and feet that hook under the bearing. A threaded section is tightened to pull out the bearing. External pullers hook over the outside of the bearing and a screwed thread is tightened against the shaft.

Internal and external bearing puller[5]

Air Ratchet These tools are very useful for removing or fitting nuts and bolts. However, it is possible to over tighten if you are not careful. Air tools can be very powerful. Take adequate precautions at all times.

These tools are very useful[5]

AC Servicing Unit Most modern servicing units can be used to drain, recycle, evacuate and refill air-conditioning systems. Some older types would only carry out individual procedures. Note that different servicing units are required for R12 and R134a refrigerants and their oils must not be mixed with one another. If work is to be carried out on an air-conditioning system, a servicing unit is essential. Refrigerant must never be released into the atmosphere.

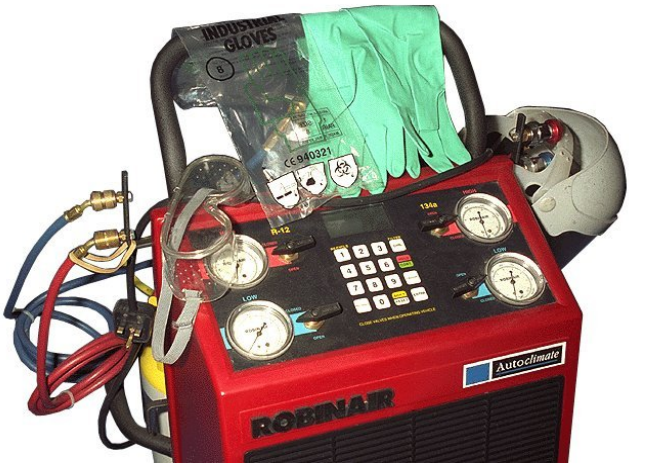

Servicing equipment

Read the previous section again and note down some key bullet points here:

-
-
-
-
-

Test Equipment

Introduction Some special test equipment is used when working with air-conditioning systems. Remember, you should always refer to the manufacturer's instructions for to the equipment you are using.

Electronic Leak Detector Most leak detectors self-zero to background concentration, but if not remember to do this. The device tests the air through the probe and detects refrigerant. Visual and audible signals are produced when a gas is detected.

Set the detector to the correct refrigerant type

Flame Type Leak Detector The flame-type detector is less common now but still in use by some repair shops. A propane gas torch is used, which has a pick-up pipe connected so that the gas to the flame causes a small suction through it. The pipe, which is long enough to keep the flame well away from the vehicle, is used to test for leaks. When a leak is detected, the flame changes to a greenish color.

Flame detection works, but UV is better!

Ultra Violet Leak Detector A popular device used when testing for leaks is an ultra-violet (UV) detector. A special die is added to the refrigerant, which shows up under UV light.

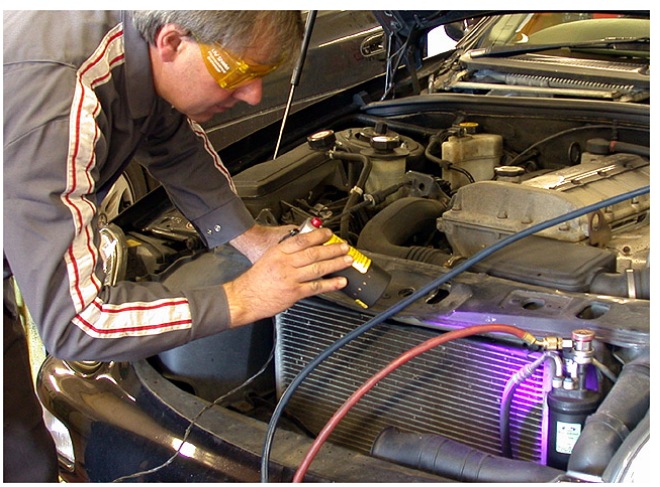

UV detector in use

Gauge Set Pressure gauges are the most important piece of test equipment for air-conditioning systems. Two gauges are used to measure the high- and low-pressure sides of the system.

Gauges connected to an air conditioning system

Thermometer A simple thermometer is useful to check outlet temperatures from the vents. The normal glass types are used, but there is a risk of breakage, so a more robust design is recommended. Some multimeters have a temperature function.

Thermometer in use

Accuracy To ensure measuring equipment remains accurate, there are just two simple guidelines:

Handle the equipment with care – test equipment thrown on the floor will not be accurate.

Ensure instruments are calibrated regularly by checking them against other equipment known to be in good working order.

Leak detector safe in its box!

Read the previous section again and note down some key bullet points here:

-
-
-
-
-

Customer Care

Regular Checks Regular servicing is vital for a customer's safety. Carry out checks at all services and report your findings to the customer. Advise customers if anything will need attention before the next scheduled service interval.

Explain any unusual conditions

Vehicle Condition Respect your customer's vehicle and take precautions to keep it clean. Repairing or checking some systems is likely to involve you working under the vehicle, and then sitting in the driver's seat. Use seat covers and ensure the steering wheel is clean when you have finished.

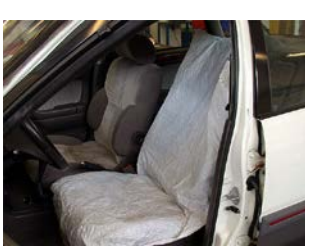

Seat covers in use

Communication Some AC systems, at first view, may appear complex. Help your customers by showing them how the different functions are operated. Sometimes customers may think they have a fault with their system when operator error Is the problem Some systems, for example, run the defrost option automatically for a few seconds after the engine first starts. The controls do not make any difference during this time and thus it may appear that there is a problem.

Show the customer how to operate the AC

Recommendations The air-conditioning system may not be used at all during the winter. Recommend to your customers that they still should run the AC system at least once a month. This ensures that the compressor stays lubricated and the refrigerant is distributed throughout the system. Many systems cause the AC to be switched on automatically when the front screen defroster option is selected.

Running the AC regularly is important

Summary A customer who is kept informed and treated with respect will return and keep you in a job! Explain things to a customer when asked – it will be appreciated.

Customers will return if they get good service

Read the previous section again and note down some key bullet points here:

-
-
-
-
-

Theory and technology

Cooling Introduction

Introduction The engine cooling system on a modern motor vehicle must help keep exhaust emissions to a minimum. During cold start and warm-up, the engine requires a rich mixture to run smoothly. Because a cold engine produces high levels of unwanted exhaust emissions, a rapid warm-up is needed to keep emissions to a minimum. The normal coolant temperature of a running engine is maintained at about 90°C. At this engine temperature, clean combustion is possible.

Air Cooling Some old engine designs used an air cooling system. Modern engines use water cooling because such a system is capable of providing the precise engine temperature control needed for exhaust emission regulations.

Air cooled system

Water cooled system

Bypass System Recent developments in coolant circulation give even closer control of engine temperature. This is accomplished by the mixing of cold and hot water as it enters the engine (rather than the cold fill of earlier systems). The old and new systems are covered in this learning program.

Ford engine…

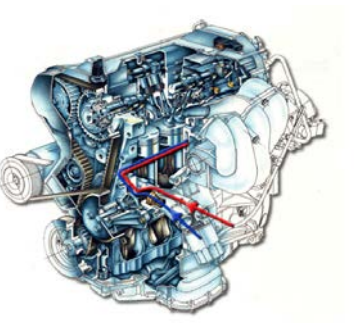
…showing coolant flow ports[1]

Function of the Cooling System The main function of the cooling system is to remove heat from the engine, particularly around the cylinder walls and the combustion chambers.

This should occur under all operating conditions, including the extremes of very hot weather, hard driving and operation in high altitudes.

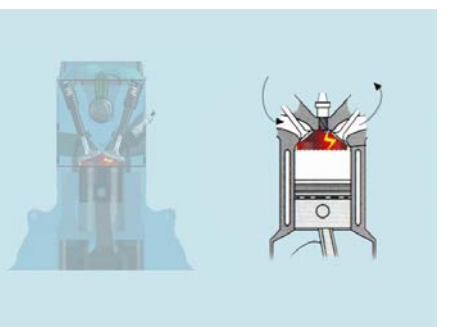
Engine cross section

Service Life Cooling system components must have a service life that is comparable with the engine mechanical components. However, some are subject to wear and natural deterioration and need to be replaced at scheduled service intervals.

Emissions Controlling emissions is an important aspect of the cooling system operation. This is achieved by controlling the upper cylinder and combustion chamber temperatures, resulting in efficient and clean combustion of the fuel. A further reduction in harmful exhaust emissions is achieved by keeping the warm-up time to a minimum.

Heating System The cooling system provides heat to the vehicle interior for the comfort and safety of the occupants.

In some cases, heating and/or cooling is provided for other engine systems such as the inlet manifold. An oil cooler for automatic transmission fluid may also form part of the cooling system.

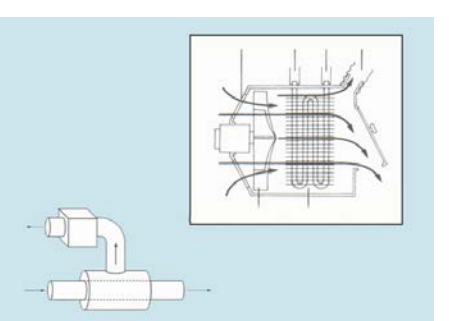
Water and air cooled heating systems

Coolant The coolant must be able to resist freezing and boiling. Contamination and corrosion to the engine and cooling system components must be kept to a minimum.

Temperature gauge fitted to test the cooling system

State the basic purpose of a cooling system.

Read the previous section again and note down some key bullet points here:

-
-
-
-
-

System Requirements

Heat Energy Heat is a form of energy that can be detected by a change in temperature. The engine uses chemical energy in the fuel. A combustion process converts the energy into heat and then into movement.

Energy Conversion The energy conversion process is not very efficient and only about 30 percent is converted into movement energy. Of the remaining heat up, to 50 percent goes out of the exhaust and the rest heats the engine. Excessive heating of the engine must be controlled in order to prevent damage.

Expansion Components expand with heat, and at high temperatures this expansion can cause seizure, and burning of pistons and valve seats. High temperatures also lead to rapid deterioration of the engine oil.

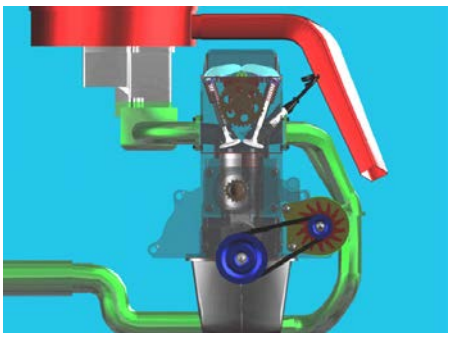
Engine components

Overheating A result of overheating is a change in the nature of the combustion process. The combustion time shortens, which, in turn, leads to a rapid rise in the pressure and force acting on the piston crown, connecting rod and crankshaft. A pinking sound may be heard, and premature failure of these components is likely. There is also an increase in temperature to a point where high levels of nitrogen oxides are produced. These are harmful in the environment.

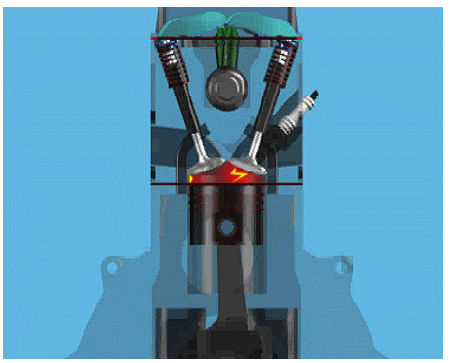
Forces acting on a piston

Cooling System Design Cooling systems are designed to maintain engines at an optimum temperature. This allows the design of components that expand on heating to form very good fits and running tolerances. The adjustment of ignition and fuel settings is matched to the optimum temperature in order to give clean and efficient combustion of fuel.

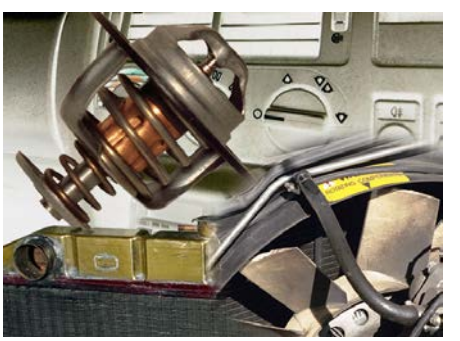
System components

Warm-Up Time Warming up to the optimum temperature as quickly as possible is important because it helps to reduce exhaust emissions. It also helps to prevent the formation of water particles in the combustion chamber and exhaust when the engine is cold. Any water that does not evaporate can enter the engine and contaminate the engine oil or remain in the exhaust system and cause premature corrosive damage.

Air or Liquid Cooling? Engine manufacturers have used two systems of engine cooling: an enclosed liquid cooling system and a direct-air cooling system. Air cooling systems are rarely used in modern vehicles.

Air cooling

Water cooling

Air Cooling Air-cooled systems have the air stream passing directly over the engine cylinders and cylinder heads to remove the heat at the source. Fins are cast into the cylinders and cylinder heads to increase the surface area of the components and therefore ensure that sufficient heat is lost.

Liquid Cooling Liquid cooling systems use a coolant to carry heat out of the engine and dissipate it to the passing air stream. The liquid coolant is contained in a closed system and is made to circulate almost continuously by the impeller on the water pump. Heat is collected in the engine and lost from the radiator to the passing air stream.

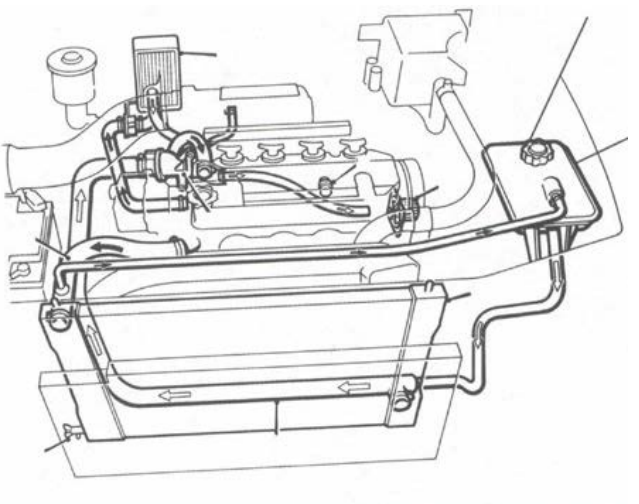

Liquid cooling system coolant flow

Explain why expansion of components must be controlled.

Read the previous section again and note down some key bullet points here:

-
-
-
-
-

Components

Thermostat The modern thermostat uses a wax pellet in an enclosed cup. Inside the wax is a rubber sleeve enclosing a pin. The pin is connected to a plate that acts as the valve. All of these components are contained in the thermostat body together with a spring to hold the valve closed when the coolant is not hot. The thermostat body includes a flange for fitting into a housing in the coolant outlet from the cylinder head, or a radiator bypass channel.

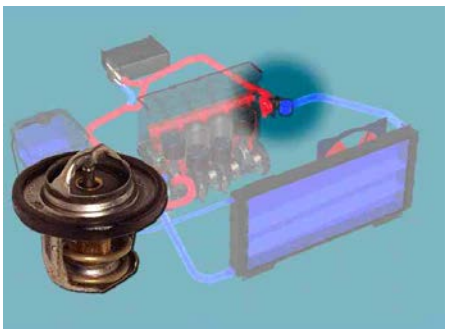

Thermostat positioning

"Wax Stat" When the temperature of the coolant acting on the wax pellet reaches the operating temperature, heat causes the wax to expand, press on the pin and force it out of the cup to open the valve. Coolant is then free to flow through the valve.

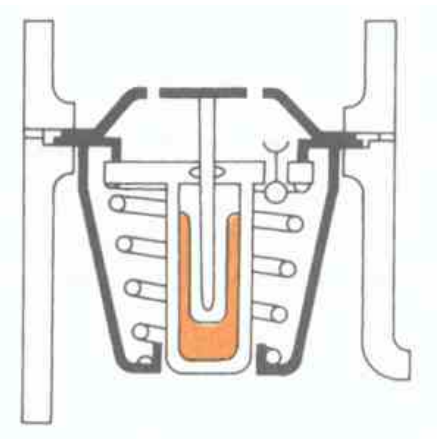

Thermostat closed

Thermostat open

Thermostat Fitting The wax pellet must always be fitted so that it sits on the hot side of the coolant flow through the thermostat.

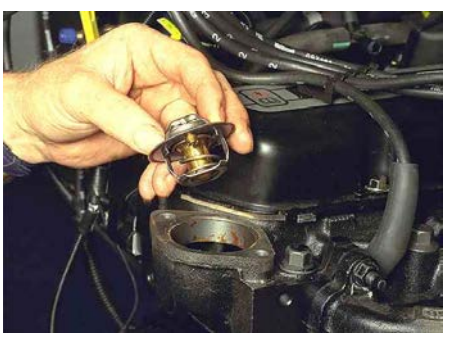

Thermostat with its wax pellet in the hot coolant area

Air Bleed Valve Some thermostat flanges are fitted with a small sub-valve to allow air to flow through the thermostat as the system is filled with coolant. This small valve must be fitted toward the top if the thermostat is fitted on its side.

Thermostats

Thermostat Position Some manufacturers have fitted the thermostat in the radiator top hose. The thermostat may also be fitted directly into its own housing and if so has to be replaced as a complete assembly.

Thermostat in cylinder head

Radiator Construction There are a number of different designs and manufacturing materials used for radiators. They all consist of a series of small tubes through which the coolant flows. Very thin sheets of metal form a large surface area around the small tubes. This large surface area makes radiators efficient heat exchangers for engine cooling purposes.

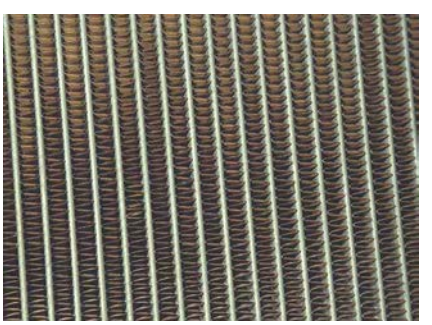

Radiator core construction

Radiator tubes

Radiator Types The radiator tubes are fitted to tanks at each end. These tanks are fitted with connections for the top and bottom hoses. The traditional radiator had the core tubes set vertically and the coolant flowing downward from the header tank to the bottom tank. The air space required for expansion of the coolant could be either in the header tank or in a separate expansion tank.

Traditional radiator

Cross flow radiator

Automatic Transmission Radiator If a vehicle is fitted with automatic transmission, an extra set of pipes running in the bottom radiator tank may be used to cool the transmission fluid.

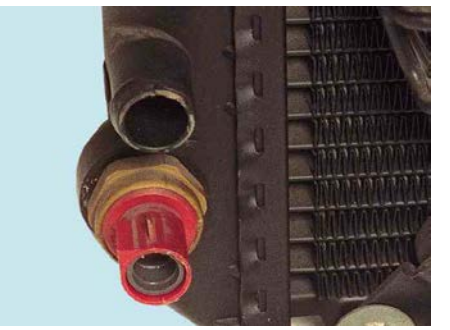
Extra cooling tubes in the radiator

Cross Flow Radiator With the lower frontal area of modern vehicles, a different radiator layout is needed. The cross-flow radiator has tubes and thin sheet fins forming the core. The core tubes run across the vehicle and the coolant flows from one side to the other. The tanks at each end of the radiator are joined to the core and have connections for the top and bottom hoses. Cross-flow radiators usually have a remote expansion tank where the pressure cap is fitted. Some cross-flow radiators have an integral expansion tank.

Cross flow radiator

Remote expansion tank

Radiator Developments Traditionally radiators were made from copper and brass and soldered together. Modern radiators are constructed from an aluminum core and nylon or plastic end tanks that are cinched together. This is a method of folding the edges of the radiator core ends over a sealing ring and a lip on the end tank. Aluminum radiators are lighter and cheaper to produce than radiators made from copper and brass.

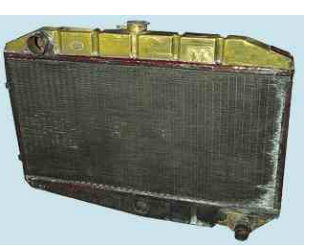
Copper/brass soldered radiator

Aluminum and plastic radiator

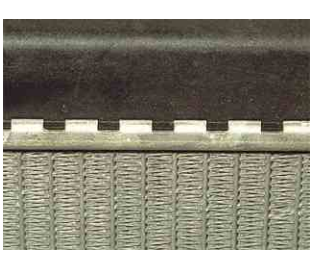
Sealing on aluminum radiator

Heater core

Pressure Cap The pressure cap was traditionally called the radiator cap because it was fitted to the radiator. On modern vehicles, the cap is fitted to the expansion or overflow tank. There are a number of designs and operating pressures. Many new vehicles are fitted with a plastic or nylon cap that is specific to one manufacturer.

Pressure caps – bayonet and screw types

Cap Operation The main parts of all pressure caps are the sealing ring, pressure valve, vacuum valve and a bayonet or screw fitting. The pressure valve consists of a spring-loaded seal that rests on a seat either in the filler neck or in the cap. The vacuum valve allows air to return to the system as it cools. It is fitted in the center of the pressure valve. Both the pressure valve and the vacuum valve are one-way valves and work in opposite directions. The pressure valve allows air out and the vacuum valve allows air in.

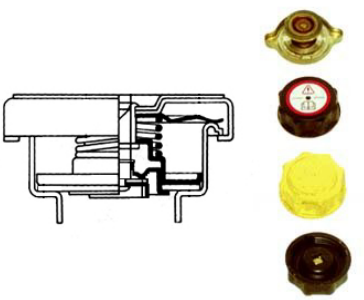

Radiator cap open…

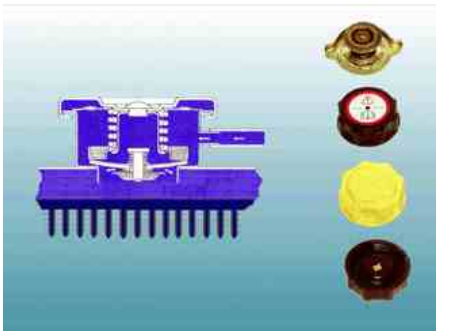

…and closed

Bayonet and Ring Cap Fittings Bayonet fitting pressure caps are tightened on a ring cam under the lip of the filler neck. A safety stop is provided to prevent the cap from coming off. For removal, the cap has to be pushed down and turned to pass the safety stops. The cap should be turned fully clockwise when fitting to ensure the correct tension on the pressure release spring of the valve.

Ring cam on bayonet cap

Water Pump The water pump is usually fitted into the water jacket of the cylinder block, although there have been some engines in which it has been fitted into the cylinder head. An external water pump is used on some engines and connected to the water jacket by pipes or hoses. The water pump is driven from the engine crankshaft by a belt.

Water pump in water jacket

External water pump

Pump Construction A spindle mounted on a bearing runs through the center of the water pump. . The bearing is pre-packed with grease and fitted with seals for retaining the grease and keeping the coolant in the engine. The drive pulley is fitted to the spindle on the outside of the pump.

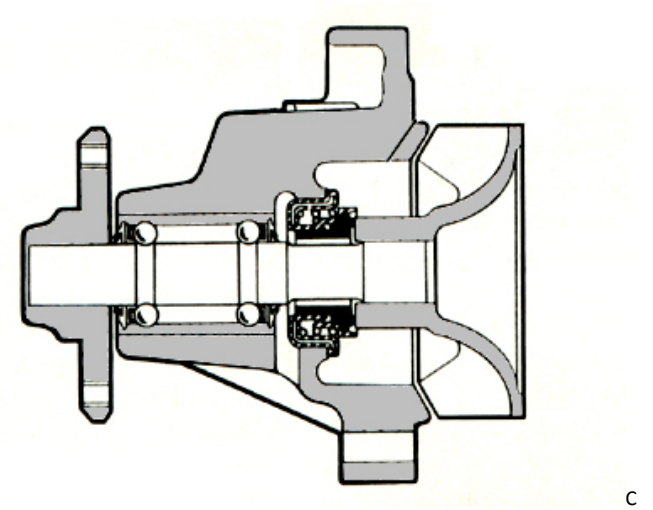

C

ross section of a water pump

Impeller The movement of the impeller creates a coolant flow through the water jacket. Water pumps are supplied as a replacement part fully assembled in a housing holding the bearing, spindle, impeller and drive flange for the pulley.

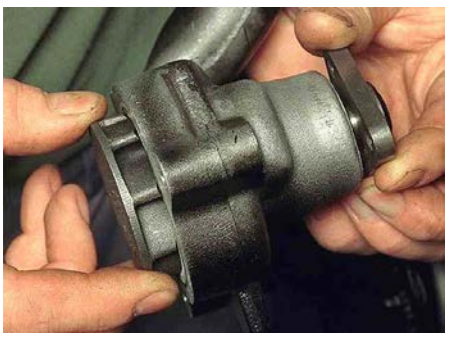

Water pump

Pump Drive Belts The drive components for the water pump usually consist of a vee belt that also drives the alternator and vee pulleys on the crankshaft and water pump. Multi-vee belts also are commonly used. The toothed camshaft drive belt drives some pumps. Adjustment of the belt is provided on the alternator mounting or by a separate tensioner.

Vee belt and pulley

Multi vee belt and pulley

Cooling Fan The fan is used to ensure an adequate airflow through the radiator when such airflow is not provided by the forward speed of the vehicle. The fan was traditionally fitted to the front of the water pump and attached with the same bolts as the drive belt pulley. Many longitudinal engines still use this system, but the fan, which used to be a pressed-steel component, now incorporates a thermostatic viscous hub and nylon fan blades.

Fan on the front of an old engine

Viscous fan hub on a modern engine

Viscous Coupling The viscous hub is a fluid clutch using silicon oil. The operation of the clutch is temperature controlled with a bimetallic valve. When the airflow temperature over the viscous hub is cool, the valve remains closed and the clutch is inoperative. When the airflow temperature over the viscous hub increases, the valve in the hub opens and the viscous fluid is driven outward by centrifugal force. The increased force in the fluid locks the plates in the hub together to engage the clutch drive to the fan.

Viscous fan hub

Electric Fan An alternative temperature sensing arrangement is for the fan to be driven by an electric motor mounted on a cowl frame attached to the radiator. A plastic fan is fitted to the motor spindle, which operates when a temperature-sensitive switch closes.

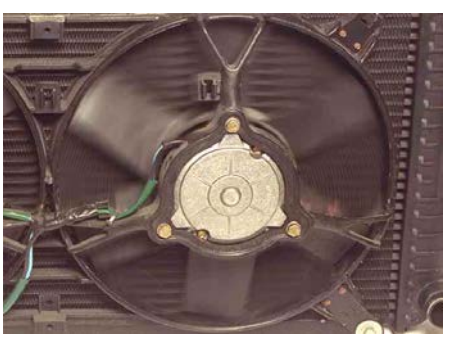
The electric fan operates…

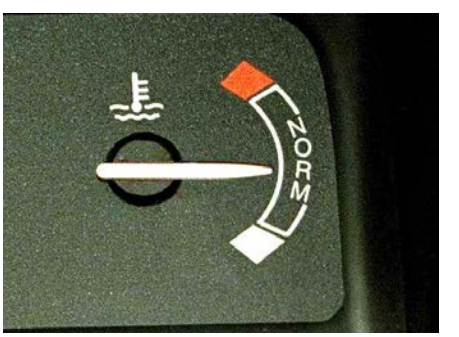

…at a set temperature

Fan Operation The supply for the electric fan is direct from the battery on some makes of vehicle and can run at any time with the ignition on or off. Other makes are connected into the ignition circuit. The electrical supply to the motor may be connected directly to the switch or be connected through a relay.

Twin-Speed Fans Some vehicles, particularly those that are fitted with air conditioning, may have two-speed fan circuits. These have a control circuit to switch the motor (or motors) to half speed at 95°C and full speed at 100°C. This system can be operated by the engine management system.

Two speed fan

Hoses and Clip Hoses are manufactured from fabric-reinforced rubber and are molded to suit the vehicle application. Connectors are cast or formed with a raised lip on the pipes leading into and out of other components. The hoses are held with round clips that can be drawn tight to give a watertight seal.

Hoses and connections

State TWO advantages of an electrically driven cooling fan.

Read the previous section again and note down some key bullet points here:

-
-
-
-
-

Components and Operation

Coolant The coolant is a mixture of water and antifreeze. The antifreeze is needed because of the way in which water expands as it freezes. The force from that expansion is powerful enough to cause engine cylinder blocks and radiators to burst.

Antifreeze Suitable antifreeze is needed for the climate in which the vehicle is operated. Modern antifreeze formulations are also designed to give year-round protection by increasing the boiling point of the coolant for hot weather use.

Antifreeze concentrate

Heat Transfer All three forms of heat transfer are used in the cooling system.

Convection occurs in the water jacket, creating internal coolant flows from the cylinder block to the cylinder head.

Conduction occurs through the cylinder and combustion chamber surfaces as heat passes to the coolant.

Radiation of heat occurs from the radiator and cooling fins when heat is passed to the atmosphere.

Heat can be transferred by…

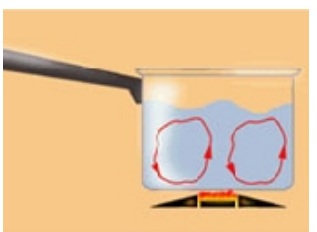
…convection

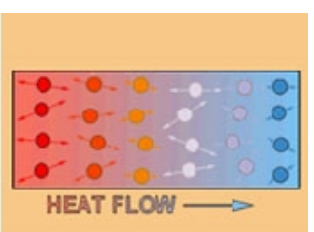

…conduction

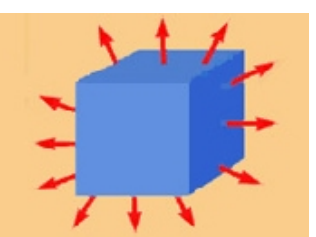
…and radiation

Rate of Heat Transfer The amount of heat transfer is dependent on four main factors:

The temperature difference between the engine and coolant.

The temperature difference between coolant and the air stream passing through the radiator.

The surface area of the radiator tubes and fins.

The rate of air and coolant flow through the radiator.

Components are designed for optimum performance

Thermostat Liquid cooling systems traditionally use a thermostat in the outlet to the top hose to control engine temperature.

A thermostat is a temperature-sensing valve that opens when the coolant is hot and closes as the coolant cools down. This allows hot coolant to flow from the engine to the radiator where it cools down and returns to the engine. The cooled coolant in the engine acts on the thermostat and it closes.

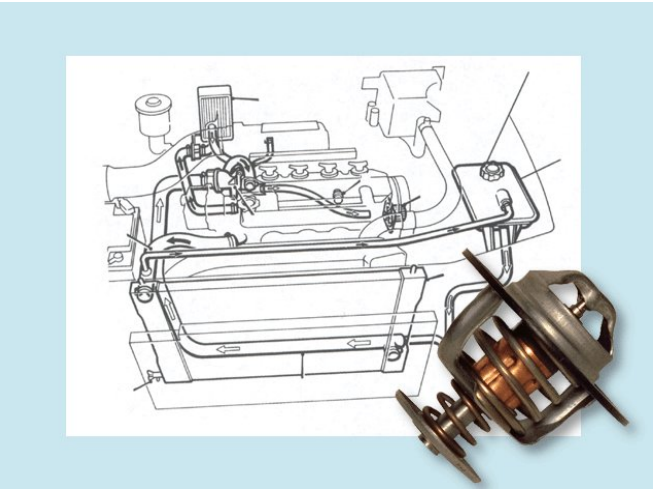

Cooling system and Thermostat

Coolant Flow The coolant re-heats in the engine. The thermostat opens and the cycle of hot coolant flow to the radiator and cool coolant returning to the engine starts again. Although this system provides a reasonably effective method of engine temperature control, it does produce a fluctuating temperature. However, a steady temperature is required for very clean and efficient combustion.

Hot and cold coolant flow

Bypass Mixing Cooling System Modern engine design is moving toward a system with the thermostat in the radiator bypass channel. When the thermostat opens it allows cold water from the radiator to mix with the hot water flow in the bypass, as it enters the water pump. This system provides a steady engine temperature and prevents the fluctuating temperature cycle of the earlier system. The modern system is shown here with arrows indicating the coolant flow.

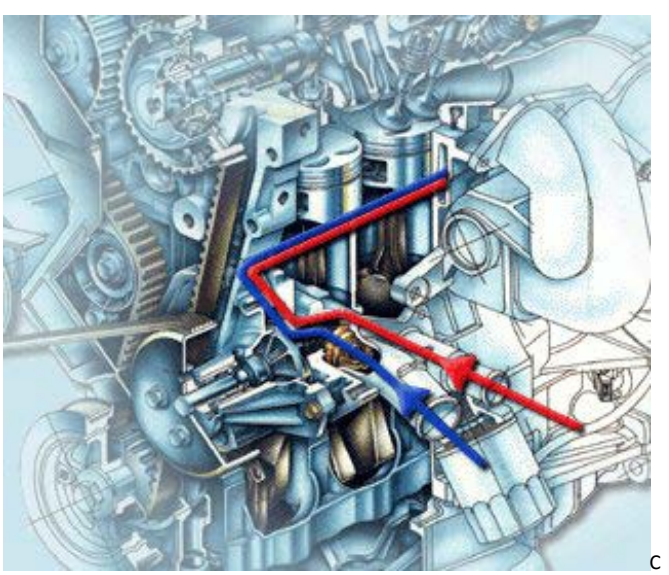

C

oolant flow[1]

Heat Distribution The heat distribution within the engine needs to be controlled. The temperature around all cylinders and combustion chambers should be very similar. To achieve this, the heat removed by the cooling system has to be consistent for all areas of the engine. All modern engines have a fairly rapid coolant circulation within the engine so that an even temperature distribution occurs.

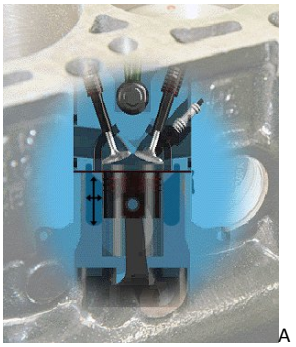
A water jacket

Water (Coolant) Pump The water (or coolant) pump, draws the coolant through a radiator bypass channel when the engine is cool and from the radiator when the engine is hot. The impeller on the water pump drives the coolant into the engine coolant passages or water jacket. Careful design of the water jacket passages directs the coolant around the cylinders and upward over and around the combustion chambers.

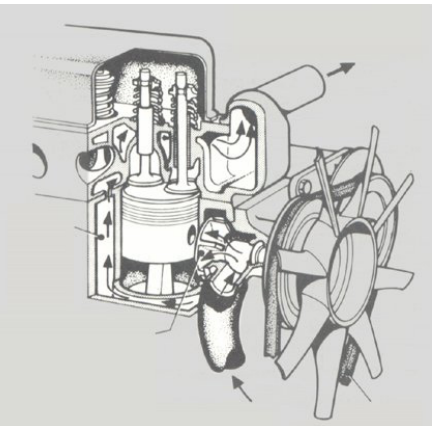
Water pump action

Coolant Density The density of coolant falls as it heats up, and as the temperature approaches the boiling point, bubbles begin to form. These bubbles can create areas in the water jacket where the coolant is at a lower density and the actual mass of coolant in that area is reduced. The reduced mass of coolant cannot be effectively heated in order to carry heat out of the engine.

Cavitation Another problem of poor heat transfer and lowered coolant density occurs when the rapid flow of coolant into and out of restrictions in the water jacket induces a phenomenon known as ”cavitation.” This results in localized drops in pressure and density in the coolant.

Heat Distribution The two causes of localized coolant density change – bubble formation and cavitation – can seriously affect the performance of the cooling system. This is because an even heat distribution around the cylinders and combustion chambers is not maintained.

Boiling water

Pressurized Cooling Systems To overcome these problems, all liquid cooling systems are pressurized. When hot, most modern systems have an operating pressure equivalent to about one atmosphere (1bar, or 100 kPa).

Expansion The pressure is obtained by restricting the loss of air above the coolant in a radiator header tank or an expansion tank. As coolant heats up, it expands. If the air above the coolant has less space to occupy and it cannot immediately escape, it increases in pressure.

Expansion tank

Radiator Pressure Cap A pressure-sensing valve in the radiator cap allows pressure that exceeds the system pressure to escape, but retains the operating pressure.

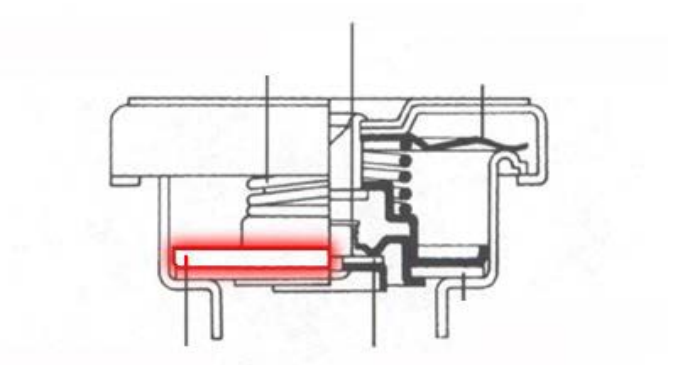

Radiator pressure cap details

Increased Coolant Density 💻 The pressure in the system acts on the coolant to increase the density, which would otherwise have fallen without the increase in pressure. This helps to reduce the risk of cavitation and to increase the boiling point of the coolant under pressure. The advantages are a more efficient cooling system with a higher safe operating temperature. It can also be used at high altitudes without the need for modification.

Pressure Cap Vacuum Valve As the engine cools down, the coolant contracts and the pressure drops. A vacuum valve in the pressure cap allows air to return to the system. This prevents depressurization below atmospheric pressure and the risk of inward collapse of components. An early sign of the failure of this valve to open is a top hose that has collapsed.

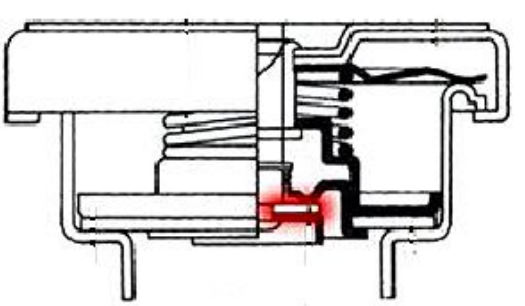

Vacuum release

Caution, Attention! 💻 The main danger from a pressurized cooling system is one of personal safety. If the coolant were not pressurized, it would be possible for the temperature to exceed the boiling point.

Cap Removal The risk of severe burns and scalds is highly likely if the pressure is suddenly released. Removing the pressure cap when the engine is hot can create the conditions for instantaneous boiling throughout the cooling system. A violent jet of steam and boiling water is likely to be ejected from the radiator or expansion tank.

Coolant may boil if pressure is released

Adding Water to a Hot Engine A similar jet of steam occurs when water is added to an overheated engine that is still very hot. Adding cold water or even hot water to a dry, hot engine can cause cracking in the cylinder block and cylinder head. Cracks can also be found in engines that have run dry of coolant and overheated in and around the combustion chambers and cylinder block.

Do NOT add coolant to a hot dry engine!!

Summary A cooling system is needed to prevent engine damage caused by overheating.

It also helps to reduce emissions by shortening the engine warm-up time.

Heat is used from the cooling system to operate the heater.

Name and state the purpose of FIVE main cooling system components.

Read the previous section again and note down some key bullet points here:

-
-
-
-
-

Antifreeze

Coolant The coolant is a mixture of water, antifreeze and inhibitors. The antifreeze is usually ethylene glycol, which needs inhibitors to prevent corrosion and foaming. These inhibitors have a life span of about two years, which means that the coolant should be changed every two years. The coolant mixture must be selected to meet the manufacturer's specifications. Aluminum alloy engines are more prone to corrosion than cast iron engines.

Antifreeze

Antifreeze Antifreeze is mixed to a specified ratio with water. Many manufacturers specify a 50/50 mixture of water and antifreeze, which allows higher engine temperatures before the coolant boils and it prevents freezing.

A hydrometer is used for testing antifreeze percentage

Ethylene Glycol An ethylene glycol antifreeze solution has an added advantage. It forms a semi-solid wax solution prior to solidification, which allows any expanding ice crystals to move within the water passages.

Result of not fitting antifreeze

Frost Protection A 50/50 coolant mixture will increase the boiling point to 106° C (223° F) and provide protection down to -34°C (-30°F). For colder temperatures down to -65°C (-90°F), a maximum mixture of 65 percent ethylene glycol can be used. Higher concentrations begin to freeze at higher temperatures. Therefore, no more than 65 percent ethylene glycol should be used.

Antifreeze is essential here!

Hard Water Areas Many regions have "hard" water that contains calcium or chalk. This separates from the water when it is heated. Deposits can be made inside the water jacket or radiator where they can block small water passages. Frequent topping off with tap water in hard water areas should be avoided. In these areas, distilled water or water from outside of the area should be used.

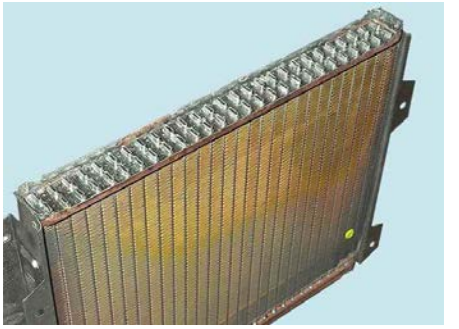

Radiator water passages

State TWO purposes of antifreeze.

State how the percentage of antifreeze in a vehicle is determined.

Read the previous section again and note down some key bullet points here:

-
-
-
-
-

Vehicle Heating

Introduction Any heating and ventilation system has a simple set of requirements. These are summarized as follows:

Heater controls

An adjustable temperature in the vehicle cabin

Heat must be available as soon as possible

Heat can be distributed to various parts of the vehicle

Fresh air ventilate possible but with minimum noise

All windows can be defrosted

Controls must be easy to operate.

Engine Heat Heat from the engine can be used to increase the temperature of the car interior. This is achieved by use of a heat exchanger, often called the heater core/matrix. Due to action of the thermostat in the engine cooling system, the water temperature remains reasonably constant. The air being passed over the heater core is therefore heated to a set level.

Heater Matrix/Core The heater core is like a small radiator. It consists of many tubes surrounded by fins to increase the surface area. Copper was used at one time, but most modern heater matrixes are aluminum with plastic header tanks.

Heater radiator

Hot Air A source of hot air is now available for heating the vehicle interior. However, some form of control is required over how much heat is required.

Heater outlet

Heat Control The control method used on most modern vehicles is blending. This is a control flap, which determines how much of the air being passed into the vehicle is directed over the heater core. Some systems use a valve to control the hot coolant flowing to the heater core.

Direction Control By a suitable arrangement of flaps, it is possible to direct air of the chosen temperature to selected areas of the vehicle interior. Basic systems allow the warm air to be adjusted between the inside of the windshield and the driver and passenger foot wells. Fresh cool-air outlets with directional nozzles are also fitted.

Heater box and flaps

Heater Blower Motor By a suitable arrangement of flaps, it is possible to direct air of the chosen temperature to selected areas of the vehicle interior. Basic systems allow the warm air to be adjusted between the inside of the windshield and the driver and passenger foot wells. Fresh cool-air outlets with directional nozzles are also fitted.

Double fan

Single fan

Wide fan

Blower box

Defrosting Outlets are positioned for directing air onto the inside of the windshield. Some cars also have outlets to direct air onto the side windows. All the output air from the heater can be directed in this way if required.

Demister outlets

Air Cooling 💻 Air-cooled systems have the air stream passing directly over the engine cylinders and cylinder heads to remove the heat at the source. Fins are cast into the cylinders and cylinder heads to increase the surface area of the components and therefore ensure that sufficient heat is lost.

Heat Exchanger 💻 Because of the way air-cooling works, it is difficult to collect heat for use in the vehicle. Some systems use a heat exchanger as part of the exhaust system. The danger of this is that if the exhaust corrodes and gases can be taken into the vehicle. Flaps are used in the same way as for water-cooled systems to control temperature and direction. However, controlling the heat output from these systems is a problem.

Summary Heating is an important passenger comfort system. The defrosting function is an indispensable feature. Most cars use heat from the cooling system to heat the interior. A heater matrix/core is used for this purpose. A blower motor together with distribution and blending flaps provides the control.

Describe the construction of a heater core

Describe the position and operation **two** air outlets used for demisting/defogging

Read the previous section again and note down some key bullet points here:

-
-
-
-
-

Heater and Temperature Gauge

Heater The vehicle's interior heater is made from an air box with a heat exchanger inside. The heat exchanger (called a heater matrix or core) is very similar to the cooling radiator. It consists of a series of tubes and fins just like the radiator.

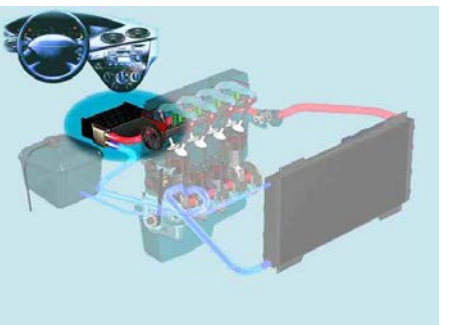

Heater system

Heater Core/Matrix Hot coolant from the engine flows through the core, heating the tubes and fins. Air flows though the outside and collects some of the heat for distribution inside the vehicle.

The heater radiator core

Air Supply Air is drawn into the heater through ducts on the vehicle exterior. The ducts are constructed to provide a dust and water trap and usually have an outlet hose for water drainage. Many new vehicles have a pollen filter fitted in the air-intake ducts. The filter is a micro-porous paper element that traps pollen and dust particles.

Heater intake ducts with pollen filter

Air Distribution The distribution of air inside the vehicle is provided by a series of ducts and outlets. These are positioned on the underside of the dashboard, at dashboard level and adjacent to the front and side windows. The outlets can be selected by operating the control levers to the required positions. The control levers are connected to flaps in the heater air box by a cable or vacuum system. The flap position directs air to the appropriate outlet.

Airflow and heater controls

Heat Control Temperature selection is achieved by regulating the coolant flow through the heater by means of a valve, or by a flap in the heater air box that directs how much air flows through the heater core. The water valve or flap is connected to a control lever by a cable or vacuum control system. Thermostatic devices are used to control air temperature on some vehicles.

Heater control with flaps

Fresh Air Supply A fresh air supply through dashboard vents is fitted to most vehicles. The air supply can be independent of the heater system so the heater can supply hot air to the driver/passenger foot area, and cool air from the dashboard outlets. On other vehicles the dashboard vents are integrated into the heater system and cannot supply different temperatures to different areas of the vehicle.

Heater box

Fascia air supplies

Heater Blower Motor A blower motor in the air intake duct boosts airflow through the heater. The motor is usually fitted with a series of resistors in order to provide a range of speeds. The motor switch routes the electrical current through the appropriate resistor for the speed selected on the switch.

Double fan

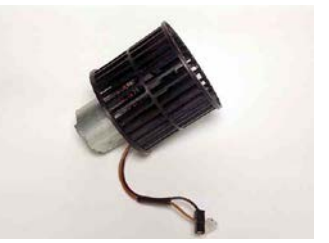

Single fan

Wide fan

Blower box

Temperature Gauge An engine temperature gauge consists of a sensor in the water jacket, called the sender unit, and a gauge in the instrument panel. The sender unit is a negative temperature co-efficient variable resistor (thermistor). The gauge is a simple meter that responds to the pull from opposing magnets or uses a bimetal strip with a heater winding.

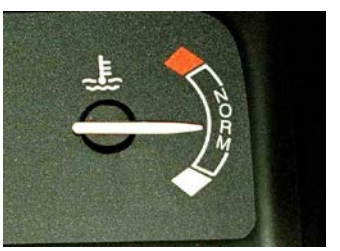

Gauge unit

Sensor or sender unit

Gauge Operation The electrical supply to the gauge is provided through a voltage stabilizer. This is to provide a constant voltage that will be unaffected by other demands on the battery. The constant voltage is applied to one side of the gauge and then passed through to the sender unit. This results in a variable voltage or current, which indicates the engine temperature.

Air cored gauge unit

System Operation As engine temperature rises, the indicator will begin to rise because the sender resistance reduces. The temperature indicator on vehicles fitted with engine management systems may also be connected to the electronic control unit (ECU). Digital gauges (where used) convert the sensor voltage signal to a digital value.

Digital gauge

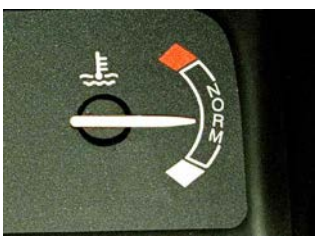

Analogue gauge

Temperature Sender An extra temperature sender may be used to operate a warning light. The sensor becomes conductive when the rated temperature is exceeded and the warning light comes on. Some vehicles are fitted with a gauge and a warning light.

Summary A cooling system is needed to prevent engine damage caused by overheating. It also helps to reduce emissions by shortening the engine warm-up time. Heat is used from the cooling system to operate the heater.

Describe the operation of a temperature gauge.

Read the previous section again and note down some key bullet points here:

-
-
-
-
-

Ventilation Systems

Introduction Fresh air helps to keep the driver of a vehicle alert. Most cars now allow a wide range of settings for ventilation.

Air outlets

Plenum Chamber Fresh air helps to keep the driver of a vehicle alert. Most cars now allow a wide range of settings for ventilation.

Airflow The plenum chamber on a vehicle is usually situated just below the windshield, behind the hood. When the vehicle is moving, the airflow over the vehicle will cause a higher pressure in this area. Suitable flaps and drains are utilized to prevent water from entering the car through this opening.

Air inlet grills

Recirculated Air Many vehicles allow a choice between fresh or recirculated air. The main reason for this is to decrease the time taken to heat or cool the car interior. The other reason is that, in heavy congested traffic, the outside air may not be very clean.

Ventilation controls

Air Distribution By means of distribution trunking, control flaps and suitable nozzles, the air can be directed as required. This system is enhanced with the addition of a variable-speed blower motor.

Control flaps

Air Outlets When extra air is forced into a vehicle cabin, the interior pressure would increase if no outlets were available. Most passenger cars have the outlet grills on each side of the vehicle above the rear quarter panel.

Outlet vents

Blower Motors The motors used to increase airflow are simple permanent-magnet two-brush motors. The blower fan is often the centrifugal type and, in many cases, the blades are positioned asymmetrically to reduce resonant noise.

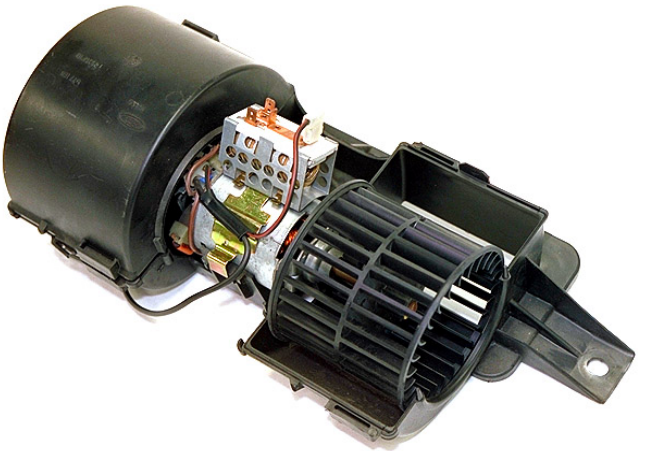

Typical motor and fan arrangement

Speed Control The motors used to increase airflow are simple permanent-magnet two-brush motors. The blower fan is often the centrifugal type and, in many cases, the blades are positioned asymmetrically to reduce resonant noise.

Checking voltage at the resistor pack

Three-Speed Control System A circuit diagram typical of a three-speed control system is shown here. The resistors are usually wire-wound and are placed in the air stream to prevent overheating. These resistors will have low values in the region of 1Ω or less.

Summary Ventilation, as well as the obvious need for fresh air, contributes to road safety by helping to keep the driver alert. Most systems are a simple arrangement of flaps, trunking and vents.

State the definition of a plenum chamber.

Read the previous section again and note down some key bullet points here:

-
-
-
-

Air-Conditioning Fundamentals

Introduction A vehicle fitted with air conditioning allows the temperature of the cabin to be controlled to the ideal or most comfortable value. This is usually determined by the ambient conditions. Air conditioning can be manually controlled or, as is often the case, combined with some form of electronic control. The system as a whole can be thought of as a type of refrigerator or heat exchanger. Heat is removed from the car interior and dispersed to the outside air.

Air conditioning is cool[2]

Principle of Refrigeration To understand the principle of air conditioning or refrigeration, the terms and definitions described on this screen and the next, will be useful:

Heat is a form of energy

Temperature is the degree or intensity of heat of a body, and the condition that determines whether or not it will transfer heat to, or receive heat from, another body

Heat will only flow from a higher to a lower temperature.

Principle of Air Conditioning Useful terms and definitions:

Change of state describes the changing of a solid to a liquid, a liquid to a gas, a gas to a liquid or a liquid to a solid

Evaporation describes the change of state from a liquid to a gas

Condensation describes the change of state from gas to liquid

Latent heat describes the energy required to evaporate a liquid without changing its temperature.

Latent Heat Latent heat, in the change of state of a refrigerant, is the key to air conditioning. As an example of this, put a liquid such as methylated spirits on your hand. It feels cold. This is because it evaporates and the change of state, from liquid to gas, uses heat from your body. This is why the process is often thought of as ''unheating' rather than cooling. Remember however, that methylated spirits is flammable. The refrigerant used in many air-conditioning systems changes state from liquid to gas at -26.3^{o}C.

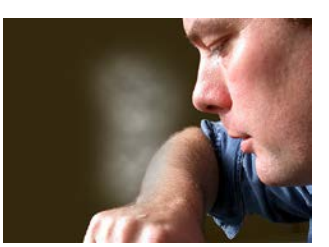

A liquid evaporating uses heat

Refrigerant The refrigerant used in many air-conditioning systems is known as R134a. This substance changes state from liquid to gas at -26.3^{o}C. R134a is HFC-based. Earlier types were CFC-based and caused problems with atmospheric ozone depletion. The two types of refrigerant are NOT compatible.

A key to understanding refrigeration is to remember that low-pressure refrigerant will have low temperature, and high-pressure refrigerant will have a high temperature.

R134a refrigerant

Air Conditioning System The layout of an air-conditioning or refrigeration system is shown here. The main components are the evaporator, the condenser and the pump or compressor. The evaporator is situated in the car, the condenser outside the car in the air stream, and the compressor is driven by the engine.

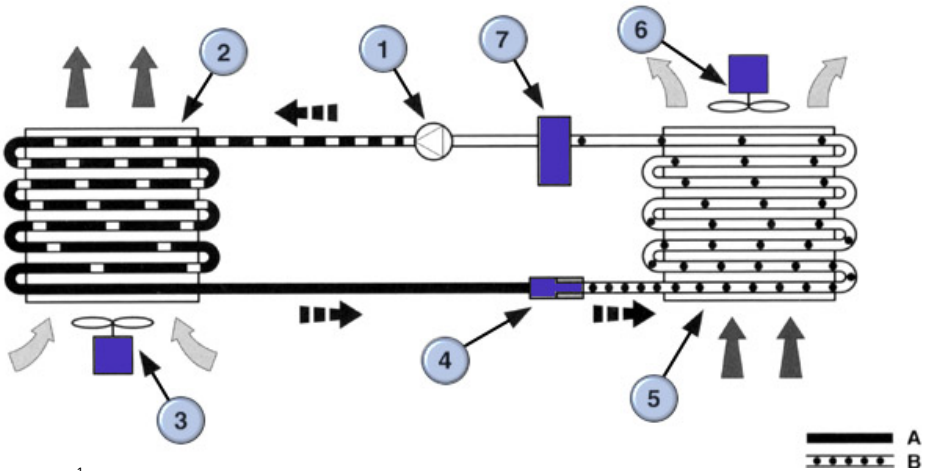

System layout[1]

High-Pressure Liquid As the compressor operates, it causes the pressure on its intake side to fall. This allows the refrigerant in the evaporator to evaporate and draw heat from the vehicle interior. The high-pressure or output side of the pump is connected to the condenser. The pressure causes the refrigerant to condense, in the condenser, thus giving off heat outside the vehicle as it changes state.

Low Pressure Vapor The compressor pumps low pressure, but heat-laden vapor from the evaporator compresses it and pumps it as a super-heated vapor under high pressure to the condenser. The temperature of the refrigerant at this stage is much higher than the outside air temperature. Therefore, it gives up its heat via the fins on the condenser, as it changes state back to a liquid. This high-pressure liquid is then passed to a receiver drier, which stores any vapor that has not yet turned back to a liquid. Alternatively, a suction accumulator is used on the low-pressure side.

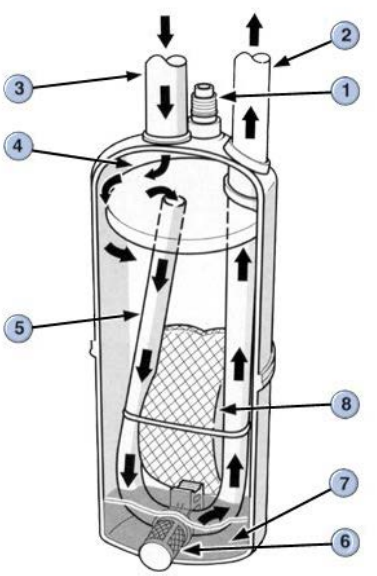

Suction accumulator[1]

Drying Agent A desiccant, which is a drying agent, removes any moisture that is contaminating the refrigerant. Refrigerant, like brake fluid, is hygroscopic, which means it absorbs water. The high-pressure liquid is now passed through the thermostatic expansion valve, or a fixed orifice, and is converted back to a low-pressure liquid as it passes through a restriction into the evaporator.

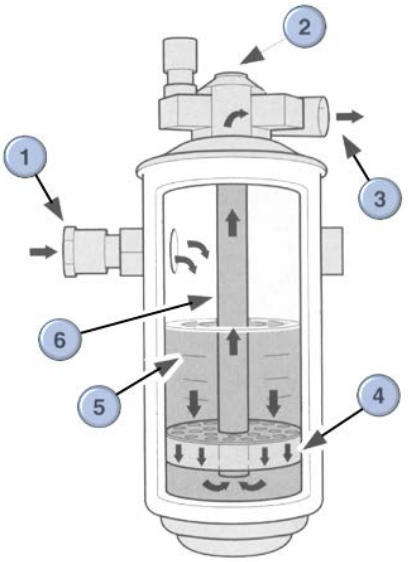

Receiver/drier[1]

Cooling or 'Unheating' As the liquid changes state to a gas in the evaporator, it takes up heat from its surroundings, thus cooling or 'unheating' the air, which is forced over the fins. The low-pressure vapor leaves the evaporator returning to the pump, thus completing the cycle.

Temperature of the Refrigerant If the temperature of the refrigerant increases beyond certain limits, the condenser cooling fans can be switched on to supplement the ram air effect.

Condenser cooling fans

Summary Changing a liquid into a gas uses energy. This energy, in the form of heat, is taken from inside the vehicle. When the gas is compressed, it gets hotter and the heat can be given off outside the vehicle. This turns the gas back into a liquid and the cycle starts again.

Air conditioning system label

Describe how an AC systems operates

State the purpose of fitting a receiver drier in the system

Read the previous section again and note down some key bullet points here:

-
-
-
-
-

Air-Conditioning Components

Introduction The main components of an air-conditioning system are:

A compressor

A condenser

An evaporator

A control valve

A drier.

Each part is examined on the following screens.

Compressor The compressor for an air-conditioning system is shown here. It is belt driven from the engine crankshaft and it causes refrigerant to circulate through the system. The compressor is controlled by an electro-magnetic clutch, which may be under either manual control or electronic control, depending on the type of system.

Compressor in place on the engine

Swash Plate Compressor The engine drives the shaft via a multi-V belt. Five double pistons are arranged around the driving shaft. The swash plate, which is mounted on the main shaft, causes the pistons to move backward and forward.

Swash plate operation

Scroll Compressor This compressor consists of two helices, one within the other. One is fixed, the other moves as the shaft rotates. This causes chambers to expand and contract. The refrigerant is drawn in as the chambers expand, and compressed as they contract.

Scroll operation

Vane Compressor Vane compressors are similar in operation to oil pumps of this design. As the central shaft rotates, the vanes are thrown out against the stator. This causes the pumping action because the volumes are increased and decreased as the shaft rotates.

Vane operation

Condenser The condenser is fitted in front of the vehicle radiator. It is very similar in construction to the radiator and fulfills a similar role. The heat is conducted through the aluminum pipes and fins to the surrounding air and then by a process of radiation and convection is dispersed by the air movement.

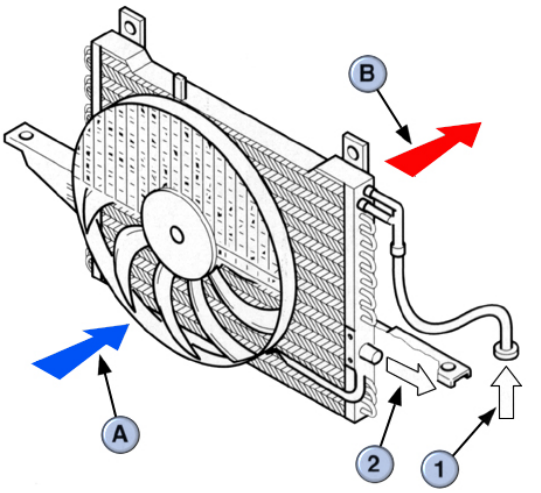

The condenser is very similar to the cooling system radiator[1]

Receiver/Drier A typical receiver/drier assembly is shown here. It is connected in the high-pressure line between the condenser and the thermostatic expansion valve. This component carries out four tasks:

Holds refrigerant in a reservoir until a greater flow is required

Prevents contaminants from circulating through the system by using a filter

Retains vapor until it converts back to a liquid

Removes moisture from the system using a drying agent.

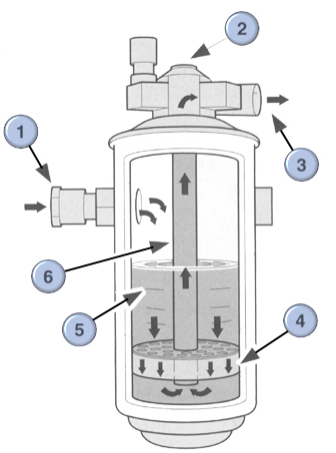

Receiver/drier assembly[1]

Low-Pressure Accumulator/Drier Systems that use a fixed-orifice control system usually use a low-pressure accumulator instead of a receiver/drier. This component carries out the same tasks as a receiver/drier.

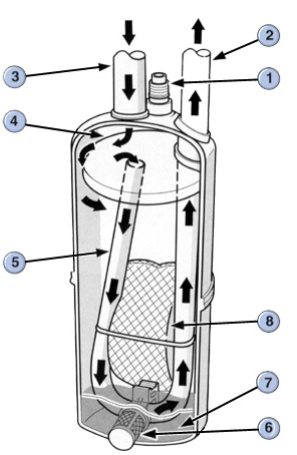

Low-pressure accumulator assembly[1]

Sight Glass A sight glass is fitted to some receiver/driers. This gives an indication of refrigerant condition and system operation. The refrigerant generally appears clear if all is in order.

Sight glass diagnostics

Thermostatic Expansion Valve A thermostatic expansion valve is shown here. The main function of this valve is to control the flow of refrigerant as demanded by the system. This, in turn, controls the temperature of the evaporator. A temperature sensor is fitted in the evaporator on some systems.

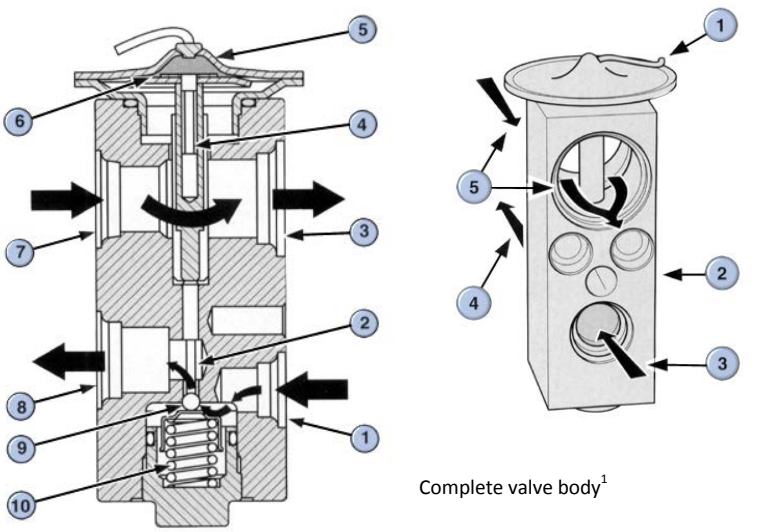

Complete valve body[1]

Valve body in section[1]

Fixed-Orifice System Some systems use a fixed-orifice control valve. The operation is quite simple. A fixed orifice, which is a small hole, only allows a certain flow rate! Filters are included to prevent contamination. The fixed orifice is the connection between the low- and high-pressure systems.

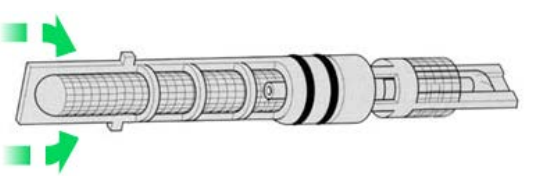

Orifice tube details

Evaporator The evaporator is similar in construction to the condenser, consisting of fins to maximize heat transfer. It is mounted in the car under the dashboard, forming part of the heating and ventilation system. As well as cooling the air passed over it, the evaporator also removes moisture from the air. This is because the moisture in the air condenses on the fins. (The action is much like breathing on a cold pane of glass.) A drain is fitted to remove water.

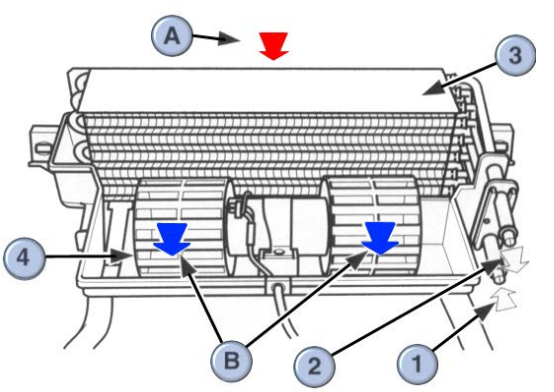

Evaporator housing and blower motor[1]

Summary The key components of an air-conditioning system are the condenser, evaporator and compressor. Refrigerant takes heat from the car as it evaporates. It is then compressed, and condenses in the condenser. It gives off heat to the atmosphere.

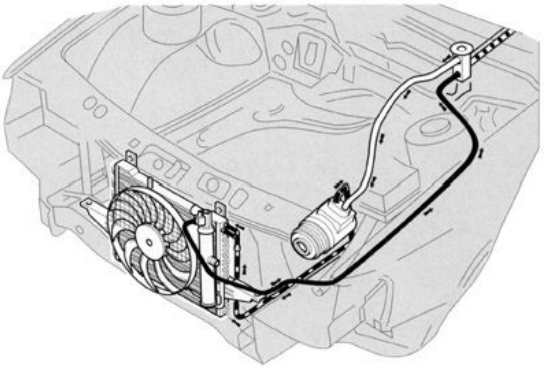

Refrigerant circuit components (click to zoom in/out)

State the purpose of the evaporator and condenser.

Describe with the aid of a sketch, how a vane type compressor works

Read the previous section again and note down some key bullet points here:

-
-
-
-
-

Other Heating Systems

Introduction Electrical heating is used for the windshield, other windows, seats and mirrors. Some heavy vehicles also incorporate cab heaters, which use fuel from the tank. As far back as the 1920s, when vehicle heaters were not fitted, electrically heated gloves were available. Beware of short circuits!

Rear Screen Heating Heating of the rear window involves a circuit with a relay and usually a timer. The heating elements are thin metallic strips bonded to, or built inside the glass. When a current is passed through the elements, heat is generated and the window will defrost or defog.

Rear screen heater elements

High Current This circuit can draw high current, with 10 to 15 amps being typical. Because of this, the circuit often contains a timer relay to prevent the heater from being left on too long. The timer will switch off after 10 to 15 minutes. The rear window elements are usually shaped to defrost in the rest position of the rear wiper blade, if fitted.

Timer relay

Windscreen Heating Windshield heating is used on some vehicles. This presents more problems than the rear because vision must never be obscured. The technology that is used is drawn from the aircraft industry; it involves very thin wires cast into the glass. As with the heated rear window, this device can consume a large current and uses a timer relay.

Front screen heater elements

Seat Heaters The concept of seat heating is simple. A heating element is placed in the seat, together with an on-off switch and a control to regulate the heat. However, the design of these heaters is more complex than first appears.

Heater elements

Seat Heating Requirements Seat heater systems have the following requirements:

The heater must only supply the heat loss experienced by the person's body

Heat must be supplied only at the major contact points

Heating elements must fit the design of the seat

The elements must pass the same rigorous tests as the seat, such as squirm, bounce and bump tests.

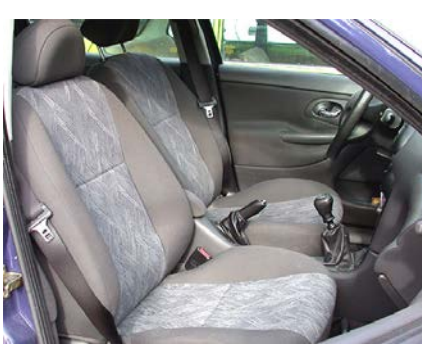
Vehicle interior

Seat Heater Control A thermostat switch is the main method of control. Recent developments, however, tend to favor electronic control combined with a thermistor. These seat heaters will heat up to provide an initial sensation in one minute and to full-regulated temperature in three minutes.

Mirror Heaters Some vehicles are fitted with heated mirrors. These may come on with the windshield heaters or be on all the time with the ignition. Small elements are fitted behind the glass. This is a particularly useful system for defrosting.

Heated mirror

Cab Heaters Some large vehicles are fitted with cab heaters that run off fuel from the tank. They are used, for example, to heat the cab for overnight sleeping when the engine is not running. A thermostat control is used much like for household heating systems.

Summary All forms of heating systems improve driver and passenger comfort. This can be a major contribution to road safety.

Describe the basic principle of seat heating

State when mirror heaters are switched on

Read the previous section again and note down some key bullet points here:

-
-
-
-
-

Service and repair

Routine Maintenance

Servicing Scheduled service requirements for the engine cooling system consist of checks on its performance and operation. All of the quick checks described in the Checking System Performance section should be completed. Obtain data from the vehicle manufacturer's service schedules for the work to be carried out at any particular mileage or time interval.

Check manufacturers' data

Routine Replacement The main cooling system item for routine replacement is the antifreeze and coolant. Rubber components such as hoses and drive belts are replaced if they begin to show signs of deterioration. A preventative maintenance program would include replacement of hoses and drive belts at, say, a three- or four-year- interval. Report any faults found during service operations to the owner or driver of the vehicle.

Hoses and antifreeze

230. **Worksheet** Routine maintenance inspections, lubrication and replacement of parts.

The routine maintenance items are mainly quick checks to ensure that the system is operating correctly and is likely to do so until the next scheduled service. Details of the checks are covered in the Checking System Performance section. Any additional items that are specified in the service schedule should be carried out in accordance with the manufacturer's instructions.

Pollen Filters On vehicles whose ventilation systems are fitted with pollen filters, the paper element should be changed at the specified mileage/kilometers, or more frequently in very dusty conditions. Replacing the coolant with a new water and antifreeze solution is covered by the next worksheet.

Use good quality filters

231. **Worksheet** Drain and top off coolant to prepare for fall/winter conditions.

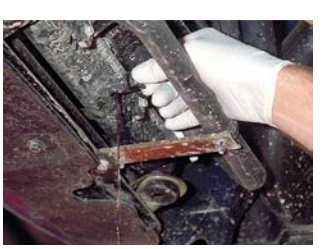

Radiator being drained

There are two types of service schedule. Most types are based on mileage and time but some older schedules were based on seasonal requirements. The reasons for seasonal maintenance are still valid and can be used on top of mileage and time service schedules.

Seasonal Checks Cooling system maintenance should match the season. In the summer when hot weather is expected, it is important that the system is working efficiently and that checks for leakage and for coolant and airflow through the radiator are carried out. Any problems that are discovered should be reported to the customer, who can authorize you to replace any parts.

Winter Conditions During winter months, the risk from coolant freezing is high. Because water expands on freezing, adequate antifreeze strength is necessary to prevent damage to the engine and radiator.

Draining Coolant Drain the coolant into a clean drain tray and transfer it to a clean can or tank for disposal to an authorized site. The container should be marked to show the contents as antifreeze – ethylene glycol. Never use food containers for this purpose. Follow the vehicle manufacturer's instructions for the method of draining.

Coolant being drained

Antifreeze Observe the manufacturer's recommendation for antifreeze type and quantity. Antifreeze solutions for year- round use have additives and inhibitors to make them suitable for this type of application.

Check antifreeze regularly

Filling the Cooling System Some engines will fill without problems of air bubbles forming in the water jacket or heater. However, if problems are found, bleed the system in accordance with the vehicle manufacturer's instructions. Where bleed valves are fitted, open these before filling and close them when coolant flows freely. When an engine has to be run to force coolant through the heater, take care to keep clear of rotating components and hot coolant.

Bleed valves in cooling system

Customer Care All faults should be reported to the vehicle owner or driver – together with recommendations for further diagnostic tests or repair work. Always ensure that the vehicle is clean before returning it to the customer.

Overheating and Freezing For drivers, there are two main concerns relating to the cooling system. These are overheating and freezing.

Overheating is more common during the summer months and frequently occurs on long journeys and in traffic jams. Customers will appreciate it if you reminder them to check the cooling system for coolant level, water pump drive belt condition and for hose condition each spring.

Overheated engine!

Safety First Show customers what to look for and explain how important it is for safety reasons that they do not remove the pressure cap until the engine has cooled down.

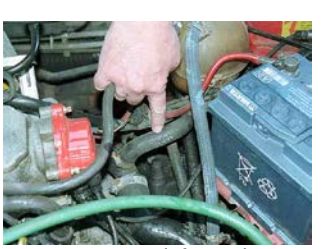
Keep customers informed

Pre-Winter Checks During the fall, remind vehicle owners or drivers of the need for a pre-winter check of the coolant antifreeze content. Most manufacturers now recommend a 50 percent ethylene glycol solution. Explain why it important that this coolant mixture should be used for topping off that system.

Frozen Coolant If customers report frozen cooling systems, advise them to make sure that the engine is gently warmed until the coolant thaws. They must then have the antifreeze content checked and topped off as soon as possible. If necessary, explain how the coolant in the engine can be liquid, but if the radiator is frozen the engine will still overheat. The reason, of course, is that the coolant cannot circulate.

Customers appreciate good advice

Coolant Leaks Coolant leaks can damage engines. A driver should watch the temperature gauge and make the daily or weekly checks needed for early detection of cooling system problems – particularly before any long trips. Advise customers that ethylene glycol is a skin irritant and can damage or discolor some types of paintwork.

Temperature gauge

Summary Remember, regular checks of the cooling system will keep the vehicle reliable – and the customer happy!

Scheduled Servicing Scheduled service requirements are often quite simple but none-the-less important. Systems should be checked for correct operation. Adjustments, repairs or replacements are then made if required.

Non-Routine Work When carrying out routine maintenance, some non-routine work may be found. This should be reported to the driver or owner of the vehicle before repairs are carried out.

232. **Worksheet** Check operation of heating and ventilation system.

This is a straightforward task but nonetheless important. Correct operation of the heating and ventilation system is not only important for occupant comfort; it is also a safety feature. Particularly in cold weather, screen defrosting is critical.

Heater controls

System Operation To test the system operation, first start the engine and run until it is warm. Use exhaust extraction equipment if working indoors. Next, check that the booster fan runs at all speeds. Switch off the air conditioning (AC) if fitted. Set the temperature control to cold and the fan speed to a medium setting. Run through all direction settings and check that COOL air is supplied.

Engine is up to temperature when the top hose is hot

Temperature Control To check the heater operation, set the temperature control to hot and the fan speed to a medium setting. Run through all direction settings and check that HOT air is supplied. Next, check that a range of temperatures can be selected and that external or recirculated air can be used. Make sure all ventilation grills are open and allow directional control.

Air outlets

Screen Heaters All modern cars have heated rear windows. Built-in windshield heating, which is more difficult because of the potential obstruction, is used on some vehicles. Check the operations of heated windows by switching the heater on and then breathing on the inside of the window to make sure the condensation clears almost instantly. Many window heaters are fitted with a timer that switches off after about ten minutes. Some require the engine to be running before they will operate. This is because they draw a relatively high current from the battery.

Rear screen heater elements

233. **Worksheet** Check operation of air-conditioning (AC) system.

Air conditioning controls

This is a straightforward task but nonetheless important. Correct operation of the air-conditioning system is not only important for occupant comfort; it is also a safety feature. In cold weather, screen defrosting is critical. In very hot weather, air conditioning improves driver concentration, which also aids safety.

Air Conditioning Start the engine and run until it is warm. Remember to use exhaust extraction equipment if working indoors. Check that the booster fan runs at all speeds. Set the temperature control to cold, switch the air conditioning on and run the fan at maximum speed. Set the air to recirculated and check that COLD air is supplied. Some manufacturers specify a temperature at the ventilation outlets of between 2 and 6° C.

Checking temperature

Hot Air Supply Leave the air conditioning switched on and set the temperature control to hot. Reset the fan speed to a medium setting. Run through all of the direction settings and check that HOT air is supplied. Check that a range of temperatures can be selected even with the air conditioning switched on. Make sure all ventilation grills are open and allow directional control. Remember, as well as the obvious cooling effect of air conditioning, the system removes moisture, making the environment more pleasant.

Checking for hot air

Heated Screens AC systems improve window defrosting because they remove moisture from the air by condensing it on the evaporator. However, heated window operation should still be checked as described previously.

Front screen heater elements

Pollen Filters Some vehicles are equipped with pollen filters. They remove small particles from incoming air. They should be replaced at regular intervals. Also, check and remove any contamination from the air-intake area.

Filter replacement

Action to Cure Smells! Air conditioning systems can occasionally smell musty and damp. This is due to particles of dirt in the evaporator housing sticking to the condensation. The warm, moist environment is conducive to the growth of microorganisms and fungi. This is more likely to be a problem in warm climates. Manufacturers recommend specific procedures for their vehicles, but often an aerosol of special disinfectant will do the job. Follow the instructions on the product carefully.

Evaporator disinfectant

Summary Safety of all road users and pedestrians is essential. Reliable operation of the vehicle is also important. The condition of all systems is therefore vital. Carry out a check at all service intervals.

Read the previous section again and note down some key bullet points here:

-
-
-
-
-

Remove, Replace, Strip and Rebuild Components

Introduction The abbreviation R&R is short for the removal and replacement of components or remove and reassemble components. This section covers the cooling system, in-car heating, and ventilation components.

Remove and replace components

Cooling system

Air Conditioning The operations included in this learning program apply to the engine cooling and in-car heating system only. Refer to the Engine Mechanical program for details of engine mechanical tests. Checks on the air conditioning system are also included in a separate program.

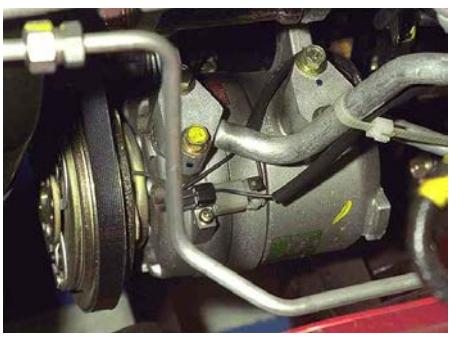
Air conditioning compressor and pipes

System Components Most of the cooling system components are attached to the engine or fitted to the front panel of the vehicle. Most components can be replaced but few can be stripped and repaired. The heater unit will require stripping for repair if coolant leaks or if airflow leaks occur. Some components will require the removal of parts from other systems in order to gain access to them.

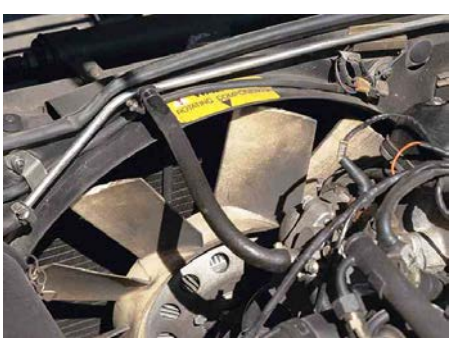
Hoses and fan

Heater being stripped

Camshaft Belts If engine camshaft belts are removed it is important to correctly re-time the engine on reassembly and to fit the toothed timing belt or camshaft drive belt, matching the original direction of rotation.

Cam belt

Timing marks

Coolant Whenever the coolant is to be reused, it must be kept clean. Always drain it into a clean drain tray. Avoid losing particles of gasket into water passages when scraping old gasket material from mating faces.

Draining coolant into clean tray

Scraping old gasket from mating faces

Heater Checking On completion of all cooling system tasks, it is important to check that the heater is working correctly. Run through all of the functions, including the operation of fresh air vents.

Heater controls

Air Locks Air trapped in the system may often prevent coolant circulation through the heater so that only cool air flows from the heater on the warmest setting. This is also a common symptom of a head gasket failure. Ensure that the heater controls are set on "hot" to prevent air from being trapped.

Air can get trapped in the system

Special Tools Very few specific tools and materials are exclusively used for the engine cooling system. When special tools are used, refer to the manufacturer's workshop manuals and data books for precise instructions on the applications and uses of these additional tools.

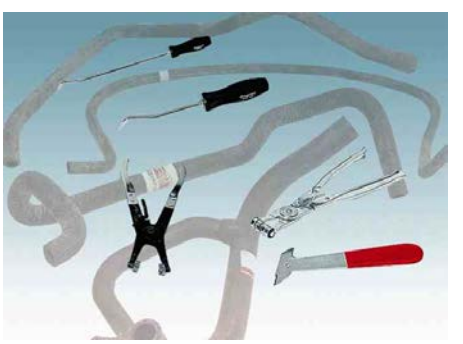
Hoses and tools

Workshop manuals and tester

Hose Removal A number of tools have been developed to help in the removal of hoses. These cranked and blunt-bladed probes can be eased into the end of a hose to break the seal against the connector pipe. Blunt screwdrivers can also perform this task. Another method is to use a sharp knife to cut the hose back, but this method can only be used when the hose is to be discarded.

Hose splitter[5]

Hose remover[5]

Hose Clips There are a range of specialized hose clips that require a dedicated pair of pliers for their removal and installation. These tend to be specific to individual manufacturers. Such pliers are included in the workshop equipment pack for the dealer. When the special tools are not available, the clip can be replaced with a general-purpose, screw-type hose clip.

F lexible hose clip tool[5]

Hose clip crimping pliers[5]

Back Flushing In some markets, specialized workshop equipment is used to flush radiators. These have a water and air mixer tap for the reverse water flow through the radiator. The action of the air is to agitate the water and improve the breakup and removal of sludge deposits in the radiator tubes.

Expansion tank during back flushing

Specialist Radiator Repairs
Specialized radiator repair shops have a range of equipment for the stripping, cleaning and rebuilding of radiators. Many carry out repairs and supply replacement radiators.

Old radiator…

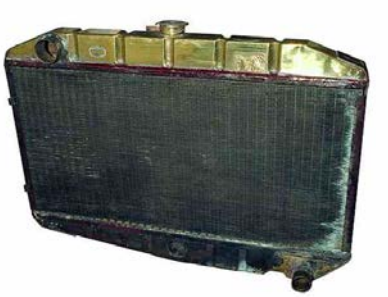

…Repaired as good as new

Cooling System Repair Materials Materials used in cooling system repair include sealants for hose connections. Other sealants are used for water pump and thermostat housing gaskets and for thread sealing, where bolts run into water passages. These sealants are specified or recommended by vehicle manufacturers. Most sealants are soft-setting types, and commercial brand sealants are usually satisfactory.

Sealants

Core Plugs Core plugs are fitted into the engine block and cylinder head. These are a by-product of the casting process but serve as safety devices in case the coolant freezes.

Core plugs in cylinder block

Types of Core Plug Two types of plug are used. A domed core plug sits in the hole and is pressed inwards at the center so that the outside diameter expands to make a tight fit. A dished plug has slightly tapered walls that fit tightly in the hole when it is inserted.

Domed core plug

Fitting Core Plugs The photo sequence here shows one method of core plug replacement. Follow manufacturer's instructions if there is any doubt about the proper procedure. Be careful not to damage the engine block or cylinder head.

Fitting a dished core plug…

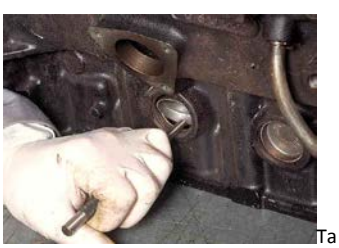
Tap with care…

Then remove with pliers…

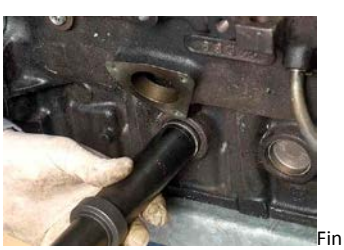
Finally refit with a drift

Removal of Core Plugs Removal of the core plugs can be carried out using either a punch-through method or extractor method. Replacement is carried out using an appropriate size dolly and soft hammer. A hard-setting sealant is usually specified or recommended. It is smeared around the lip of the hole before fitting the core plug.

Antifreeze Antifreeze is an important component of the cooling system and should not be replaced with a general-purpose product – unless it is specifically recommended and approved for the vehicle. Different types of antifreeze and inhibitors are mixed and marketed for specific applications. The type must be a suitable product for the vehicle and conform to the original equipment specifications.

Antifreeze concentrate

Coolant Disposal In some regions, antifreeze and coolant recycling plants are available. This unit filters out toxic dissolved metals while reverse flushing the cooling system. It should be installed and used in accordance with the manufacturer's instructions.

Dispose of antifreeze with care

Introduction Air-conditioning systems can be dangerous. Do not remove any components unless the system has been drained using special equipment. Refrigerant can cause injury as well as environmental damage.

AC connection valves

234. **Worksheet** Remove and refit heater unit strip, rebuild, and reassemble.

Heating and ventilation controls

Check the heater operation before beginning work and note any faults found. Fit a memory keeper and disconnect the battery ground cable. Drain the coolant into a clean drain tray. Follow the manufacturer's instructions for the removal of the heater unit and the blower motor assembly. These may be in one unit below the dashboard. Alternatively, they may be two units: the heater core and air control below the dashboard and the blower motor and air intake ducts inside the engine compartment.

Heater Unit Removal Undo the lower securing screws under the dashboard and remove the dashboard and sound deadening panels. Label and disconnect the cables for temperature control and air direction control. Remove the electrical connections to the blower motor. Undo the heater hose clips and pull off the hoses. Catch any lost coolant in a small drain tray. Undo the securing fasteners for the heater and withdraw the complete assembly. Separate the unit as required to remove the heater core/matrix. Inspect the control flaps for smooth operation and the sealing strips at the fully open and closed apertures. Replace the sealing strips if necessary.

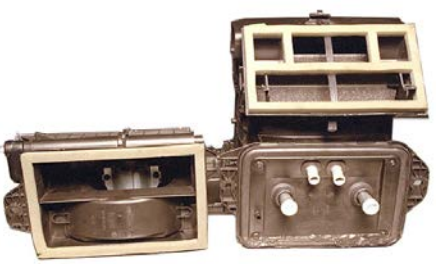
Heater assembly

Heater Unit Refitting Reassemble and refit in the reverse order. Fit and adjust control cables to give full hot and cold air operation and to match the air direction to the control position indicators. Refill the cooling system with a correct water and antifreeze mixture to make good any coolant lost during draining. Run the engine and bleed air from the system if necessary.

Topping off the coolant

Testing the Operation Road test and check the engine temperature gauge and the heater operation for hot, cold and intermediate settings. Check that the airflow temperature agrees with the heater settings. After road testing, visually check the system for leaks. Allow the engine to cool and check the coolant level. Top off if necessary but do not overfill.

235. **Worksheet** Remove and refit air-conditioning condenser.

Drain the AC system as described in the Repair and Maintenance section worksheet. Do not allow refrigerant to be vented to atmosphere. Remember that cleanliness is vital when working in air-conditioning systems.

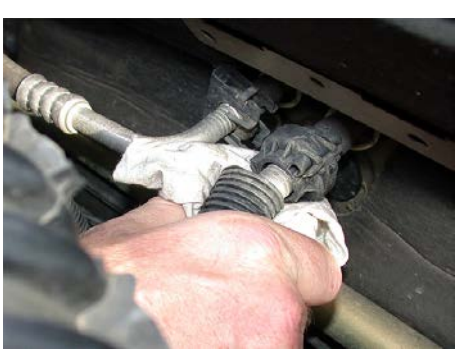
Clean connections BEFORE they are removed

Condenser Access Remove plastic trims and the hood's slam panel as required to gain access. Drain the cooling system and remove the radiator (if necessary). Undo and remove the inlet and outlet pipes from the condenser. Plug the pipes to prevent contamination.

Condenser Removal Remove the condenser securing screws and note the positions if different sizes are used. Remove the condenser from the vehicle. Plug the inlet and outlet to prevent contamination if the condenser is to be reused.

Refitting the Condenser Refitting is a reversal of the removal process, but ensure that dirt does not enter the new condenser or the pipes at any time. Use sealant tape on the pipe connections as instructed by the vehicle manufacturer. Evacuate the AC system as described in the Repair and Maintenance section worksheet. Refill the AC system as described in the Repair and Maintenance section worksheet. Carry out a full check of the AC system operation.

Condenser in position

236. **Worksheet** Remove and refit air-conditioning compressor.

Drain the AC system as described in the Repair and Maintenance section worksheet. Remove electrical connections to the compressor clutch.

C

ompressor clutch

Drive Belt Loosen the mounting and belt adjustment bolts. Remove and inspect the belt. Note that the belt, if in good condition, can be left in place on the engine ready for refitting. Replace if in any doubt. Undo and remove the inlet and outlet pipes from the compressor. Plug the pipes to prevent contamination. Remove the compressor securing bolts and remove the compressor from the vehicle.

Multi vee drive belt

Compressor Refitting Refitting is a reversal of the removal process, but ensure that dirt does not enter the new compressor or the pipes at any time. Use sealant tape on the pipe connections as instructed by the vehicle manufacturer. Adjust the drive-belt tension to its recommended settings.

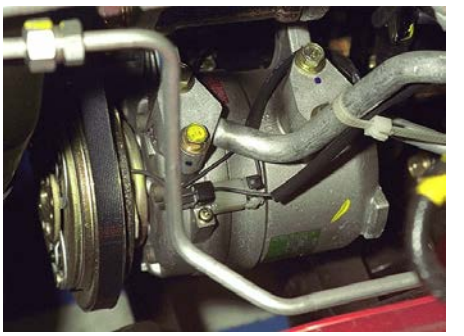
Compressor

Charging and Testing the System Evacuate the AC system as described in the Repair and Maintenance section worksheet. Refill the AC system as described in the Repair and Maintenance section worksheet. Carry out a full check of the AC system operation.

Servicing unit connected to the car

237. **Additional Worksheet** Remove and refit evaporator and expansion valve

238. **Additional Worksheet** Remove and refit air conditioning receiver drier

239. **Worksheet** Remove and refit radiator, heater and bypass hoses.

This task requires care when removing the hoses from the radiator connectors. These parts are the weak points in the construction of the radiator and can easily be damaged. Never attempt to fold the hose over in order to break the seal between the hose and connector. Break the seal using a special tool or old blunt screwdriver blade.

Removing hoses - breaking the seal

Coolant Draining Where no drain tap is fitted to the radiator, leave the radiator cap in place and place a drain tray below the water pump. Remove the bottom hose from the water pump. When the flow of coolant from the hose has been directed into the drain tray, remove the radiator cap. Hold the end of the hose as low as possible in order to ensure that all of the coolant is removed.

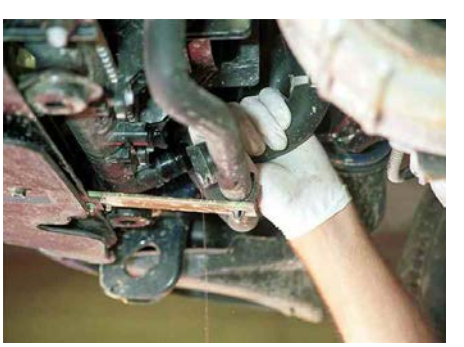
Draining coolant from the bottom hose

Refitting Hoses When refitting hoses to connectors, ensure that the hose fits fully onto the connector. Fit and tighten the hose clip so that it sits up to but not over the lip or bead on the connector.

Fitting a hose

Refilling the System Refill the system, bleed air from the heater if necessary, and always carry out a full heater system check during a road test. Allow the engine to cool after road test, recheck the coolant level and look carefully for leaks. When the replacement of hoses is due to stretch or tear damage, check the engine mountings for condition, as it is possible for excessive engine movement to damage the hoses.

Refilling radiator

Heater controls

Check for level and leaks

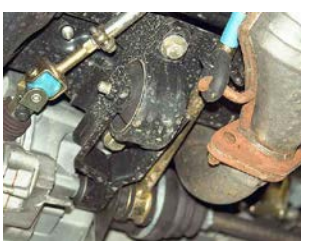
Engine mountings

240. **Worksheet** Remove and refit drive belts and pulleys.

The water pump drive belt on many engines is the same belt that is used for the alternator. On serpentine belt arrangements, the belt is common for all ancillary systems.

Drive belts and pulleys can be quite complex

Cam Belt Driven Pumps Some engines with overhead camshafts driven by a toothed belt have the water pump driven by this belt. The pump is usually driven by the teeth, but in some cases by the flat side of the cam belt.

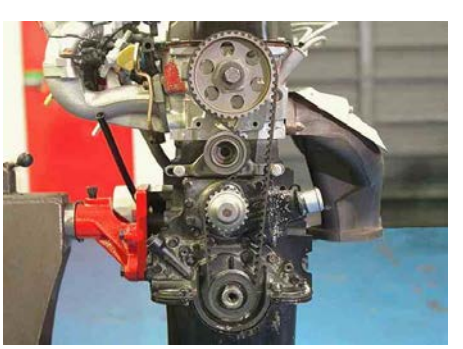
Camshaft belt and water pump drive pulley

Belt Tension Whatever the type of belt and drive arrangement, it is important that the belt is correctly tensioned. If removed, it should be refitted in the same direction of rotation. The correct timing of the cams is very important. Follow manufacturer's instructions for this task.

Belt tension is important

241. **Worksheet** Remove and replace thermostat.

The thermostat can be fitted in one of three places: in a housing on top of the engine, in the top hose or in a bypass housing. Some manufacturers fit the thermostat and housing as a single unit. In this case, the complete unit has to be replaced if a new thermostat is required.

Thermostat...

Being removed

Thermostat Replacement Drain only as much coolant as is required to bring the level below the thermostat. When replacing the thermostat, ensure that the wax pellet is on the hot coolant side, which usually means into the engine or the bypass coolant passage. Check the mating faces of the thermostat housing for flatness before replacing. Use a sealant on the gasket and on any bolts that run into the coolant passages.

Coolant level below thermostat

Thermostat being replaced

Check the thermostat housing flatness

Sealant on gasket and bolt threads

System Checks Check and top off the coolant after reassembly. Check for coolant leaks as soon as the engine is running. When the engine has warmed up check that the heater works correctly. After a road test, check that the coolant level and heater operations are still correct.

Leaks and heater checks

242. **Worksheet** Remove and replace water pump and engine driven fan. This task is the next step after removal and replacement of the water pump and fan drive belt.

Water pump being removed

Viscous Hubs The coolant can be drained while the drive belt is being removed. Always carry out under-vehicle work before draining the coolant. Where viscous hubs are fitted, a special spanner wrench may be needed to remove the viscous hub from the water pump spindle. Once the water pump pulley and fan have been removed, undo the bolts securing the water pump and ease it from the engine block.

Fan hub being removed

Pump Removal If the pump is held firmly into the block by corrosion or the adhesion of any sealant, it may be necessary to pry the pump loose. However, always check that all bolts have been removed before applying force. Check the flange and impeller fitting on the new pump before fitting. Clean the mating faces before reassembly and apply a soft-setting sealant to the gasket and to any bolts that run into the coolant passages.

Levering the water pump out

Checking new pump

Sealant on gasket…

And bolts

243. **Worksheet** Remove and replace radiator and electric fan motor and switches.

Drain the coolant from the radiator following the manufacturer’s instructions.

The removal and replacement of radiators must be carried out carefully. It is easy to damage the radiator core tubes and fins.

Lifting out radiator with electric fan and cowl

Radiator and Fan Motor Removal Look carefully at all fixing screws when they are removed. This will ensure that any long screws are not put back in the wrong position where they could puncture the radiator. Remove the fan motor and mounting frame from the radiator before removing the motor in order to protect the radiator from the risk of accidental damage. Electric fan motors are usually fitted to a cowl or frame attached to the radiator. The electric wiring for the switch and the motor are connected with a multiplug close to the switch.

Marking fixing screws for cowl

Multiplug connection

Removing the fan cowl and motor

Removing the fan motor

Radiator Damage Where damage has occurred to the radiator, fan or motor mounting plate, check and fix the cause of the damage. Look for such things as are defective engine mountings, loose plates and lost or removed covers. Fitting damage includes punctures from screwdrivers when they slip from hose clips, and the fitting of overlong screws.

Damaged radiator

244. **Worksheet** Remove and refit heater unit, strip, rebuild and reassemble.

This task must be carried out in accordance with the manufacturer's instructions. Care must be taken to prevent damage to the interior of the vehicle from coolant and to deal with the awkwardness of handling a large assembly in an enclosed place. If necessary, have someone help hold, lift and remove the heater.

Heater assembly in place…

…and removed

Heater and Controls The heater and the controls can be removed as two separate assemblies. Where air conditioning is fitted, do not remove any refrigerant pipes or hoses unless the system has been emptied by a competent and authorized person. Carry out a complete test on completion to ensure that the heater is in full working order.

Heater and heater controls

Air conditioning refrigerant pipes

Vehicle Presentation Always ensure that the vehicle is clean before returning to the customer. Remember, a happy customer will come back!

Read the previous section again and note down some key bullet points here:

-
-
-
-
-

Fault diagnosis

Checking the Cooling System

Introduction The checks included in this learning program apply to the engine cooling and in-car heating system only. Refer to the Engine Mechanical learning program for details about engine mechanical tests. Checks on the air conditioning system are also included in a separate program.

Pressure tester

Operation of the Cooling System The proper operation of the cooling system is important to ensure clean and efficient combustion. A quick check of cooling system performance should be made at every scheduled service interval.

System Performance Checks System performance checks are routine activities that take place during all servicing work. They start at pre-delivery and continue for all scheduled intervals.

Regular Checks A complete check of the system should be carried out at regular intervals. Diagnostic checks should be carried out whenever faults are suspected.

Pressure test

Component Replacement Many cooling system components require replacement during the service life of the vehicle. If failure is not detected early enough, coolant leakage may occur and engine failure is likely.

Hoses and drive belts

Breakdowns Many roadside breakdowns are caused by cooling systems overheating. There are a number of common causes for this, including loss of coolant and broken drive belts. Pressure loss from the combustion chambers into the coolant jacket is also possible.

245. **Worksheet** Inspect system for leaks and the condition of hoses and other components.

Carry out a pressure test to the system and cap. Check the coolant for condition and antifreeze strength. This check can be completed in full with the use of the pressure tester, or it may be part of a quick check when only a visual inspection is carried out. The complete check is necessary for diagnostic purposes.

Coolant Leaks Check all hoses, pipes, joints, gaskets and the water pump. The heater and water valve should also be checked for external leaks. Look inside the vehicle under the heater for leaks from the heater core. If no external leaks are visible, check the coolant for oil contamination. Check the coolant for contamination when checking the level.

Cooling system component checks

Antifreeze Content A check of the antifreeze content with a hydrometer may indicate a reduced percentage of antifreeze. This may indicate that frequent topping off with water has occurred. Check with the owner or driver of the vehicle for information on the need for topping off the coolant.

Antifreeze hydrometer

Pressure Test If no leaks can be found, although regular topping off is needed, check the condition and operation of the pressure cap. It may also be necessary to carry out tests for exhaust gas contamination in the coolant. This is carried out with a special liquid in a container attached to some types of pressure testers. The color of the liquid changes if exhaust gas is present in the coolant. Follow the equipment manufacturer's instructions for carrying out this test.

Check cap and also look for exhaust gas contamination

246. **Worksheet** Check air-conditioning system for leaks.

This task requires specialized equipment. However, it is possible to locate refrigerant leaks by looking for oily deposits at pipe joints and on components. The oil is from the lubricant, which is carried round the system by the refrigerant. Its main purpose is to lubricate the compressor.

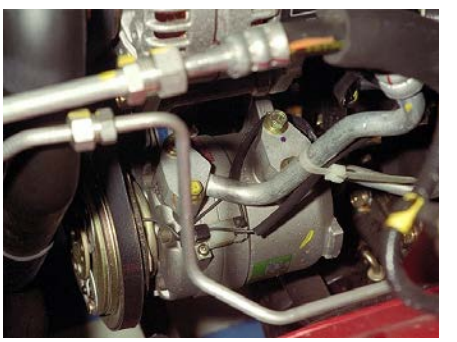
Air conditioning compressor

Leak Detection Two methods are recommended for this task. The first uses an electronic leak detector; the second uses an ultra-violet lamp and an additive in the refrigerant. Set up the detector as instructed by the equipment manufacturer. If using the electronic type, select R12 or R134a as appropriate.

UV leak detector

Visual Inspection Visually inspect all connections and components for signs of an oily deposit (a sign of refrigerant leak). When testing for leaks, hold the probe under suspected areas because refrigerant is heavier than air.

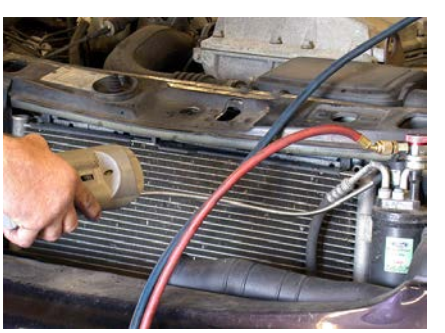
Electronic leak detector

Connections and Components Using the test probe, check for leaks from connections and components as follows:

Charge or test connection valves

Condenser

Receiver drier

Compressor

Evaporator and control valve

Pressure switches.

Finally, make sure all caps and any covers that were removed are replaced securely.

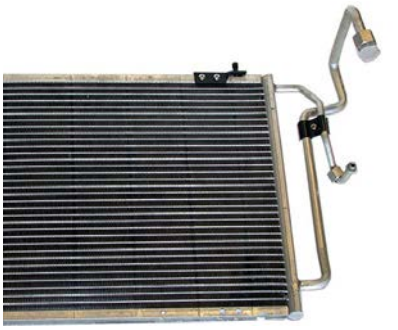
Condenser pipe connections

247. **Worksheet** Draining, evacuating and filling an air conditioning system.

Run the engine and operate the AC system for a few minutes to distribute existing refrigerant evenly. This makes extraction easier. Connect the blue servicing unit hose to the low-pressure connector and the red hose to the high-pressure connector. Open the high- and low-pressure valves on the gauges to read pressures. If no pressure exists then the system has been leaking. In this case, it should not be drained, as air would get into the servicing unit.

AC charging station

Draining the Air Conditioning System Switch the servicing unit to 'Drain' mode. Some systems are fully automatic, but others need to be switched off manually. After draining, wait ten minutes and check the pressure. If it has risen there is still refrigerant in the system. Repeat the process again if this is the case. If pressure does not rise after ten minutes, the system can be opened for work to be carried out. The refrigerant in some servicing units is cleaned and recycled automatically.

Checking the pressure

Evacuating the Air Conditioning System To completely evacuate the system, switch the servicing unit to its 'Evacuation' mode. This process can take about thirty minutes.

Air-conditioning systems are refilled with gaseous refrigerant through the low-pressure connector or liquid refrigerant through the high-pressure connector. Systems should be evacuated before refilling.

Servicing unit

High-Pressure Filling High-pressure filling is the preferred method. Check data for the correct quantity of refrigerant and then open the high-pressure valve. Switch the servicing unit to 'Fill' mode and let the specified quantity of refrigerant flow in. Switch off the unit, close the valve and disconnect the hoses.

High -pressure connection

Low-Pressure Filling Low-pressure filling is also possible. Check data for the correct quantity of refrigerant and then open the low-pressure valve. Switch the servicing unit to 'Fill' mode and let about half the specified quantity of refrigerant flow in. Operate the AC system briefly to distribute the refrigerant and then continue to fill. Start the engine and switch on the AC and a high blower speed. This ensures the compressor takes the refrigerant residues from the servicing unit. Switch off the unit, close valve and disconnect the hoses.

Low-pressure connection

Summary Air conditioning contributes to the safety of the vehicle. Therefore, system performance checks are important. Cars are operated at high speed and sudden breakdowns can be dangerous. The systems should function correctly at all times.

Read the previous section again and note down some key bullet points here:

-
-
-
-
-

Inspect and Measure Components

Pressure Test All components in the cooling and in-car heating system must be able to retain the coolant. They can all be checked on the vehicle by carrying out a pressure test and observing for coolant leakage. Any leakage will be shown on the pressure tester pressure gauge, which should remain at a constant pressure for at least one minute.

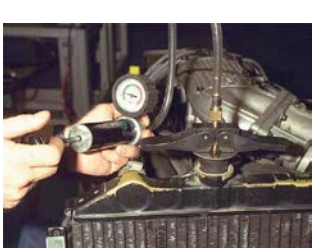
Pressure test

Pressure tester gauge

Pressure Drop Any drop in pressure on the tester gauge will need to be investigated. However, first ensure that the tester is making a good seal where it is fitted to the system filler neck.

Visual Checks Follow this with a visual check under the heater inside the car. Any loss of coolant from the heater core (heat exchanger) will be visible as a wet patch on the carpet and will have a distinct odor. Any leak that cannot be seen externally may be hidden. Check the core plugs inside the clutch cover and around the engine.

Checking inside vehicle under heater

Core plugs and gasket leak points

Internal Leaks Engine internal leaks can be detected by setting the pressure tester to about half of the system operating pressure and then running the engine. A rapid rise in pressure would indicate an internal leak into the combustion chambers or cylinders.

A rapid pressure…

… Rise on gauge indicates a fault

Exhaust Gas Detection Fluid Small leaks may not be detectable by this method. Therefore, and the use of an exhaust gas-detection fluid container attached to the cooling system pressure tester may be needed to measure contamination in the coolant.

Inspection and Measurement Inspection and measurement of many of the components can be carried out after they have been removed from the vehicle. These tests are used to look for mechanical wear, blockage of narrow coolant passages and the deterioration of rubber-based components such as hoses and seals.

Water pump hoses and thermostat

Diagnostic and Measuring Equipment There are very few items specifically used for diagnostic and measuring the engine cooling system. Refer to the manufacturer's workshop manuals and data books for precise instructions on the applications and uses of these additional tools.

Manuals and measuring equipment

Pressure Tester The cooling system pressure tester is both a diagnostic tool and a measuring instrument. Its use as a tool is to aid in the detection of coolant leaks by producing the operating pressure in the cooling system that replicates normal running. Any leaks will reduce the operating pressure and then be identified.

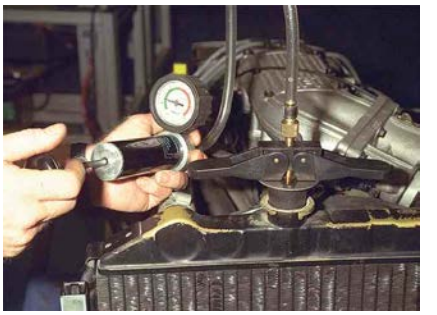
Pressure tester in use

Head Gasket Blows A pressure tester is also used to detect the sharp rises in pressure that occurs when a cylinder head gasket blows or when a crack in the water jacket allows combustion pressure to enter the system. It is further used as a measuring tool to check the operating pressure of the radiator pressure cap.

Test Liquid An attachment to the pressure tester is used to detect leaks of combustion gas into the cooling system. The tester consists of a container holding a test liquid through which the air in the top of the radiator is passed when the engine is running. The test liquid changes color from blue to yellow if combustion gas is present. It stays blue if no gases are detected.

Exhaust gas detection kit

Antifreeze Percentage The antifreeze content can be measured with a range of hydrometers. These are all for ethylene glycol-based antifreezes and are not suitable where other substances have been used.

Ball Hydrometer The ball-type antifreeze tester consists of a set of balls that float in a drawn-off sample of coolant. The number of balls floating in the sample indicates the antifreeze percentage solution. Refer to the manufacturer's data for information on interpreting the hydrometer reading.

Simple ball type hydrometer

Float Hydrometer A standard float type hydrometer is also available. This draws off a sample of coolant. The float level is marked to indicate the percentage of ethylene glycol in the coolant. Some of these hydrometers have a built-in thermometer for the coolant temperature and include a correction chart for the actual float reading against the coolant temperature.

Float type hydrometers are the most accurate

Drive Belt Tension The water pump and fan drive belt tension can be measured and adjusted with the use of a belt tension gauge. Many manufacturers recommend the use of these gauges for accurate adjustment of belt tension.

Belt tension gauge

248. **Worksheet** Reverse flush and test the radiator flow rate. Inspect hoses.

This test is likely to be necessary when a radiator is old or has been filled with dirty water or when internal corrosion of hoses or the engine block has lead to a buildup of sediment in the cooling system. Most of these problems are caused by a lack of regular maintenance.

Sediment in the radiator may result in the need for serious repairs!

Radiator Checking It is possible to identify areas on a radiator that may be blocked internally. When the engine is at normal operating temperature the thermostat opens and coolant flows through the radiator. By running the palm of a hand over the outside of the radiator, it is possible to feel differences in temperature from one area to another. Cool areas in any position on the radiator are likely to indicate poor circulation through the coolant tubes in that part of the radiator.

Checking the radiator for cool spots…

…And hot spots

Periodic Cleaning Periodic cleaning at intervals when the coolant is replaced is a sensible action for preventative maintenance. The procedure is straightforward. It requires an outside area with a drain and a water hose. High pressure is not required.

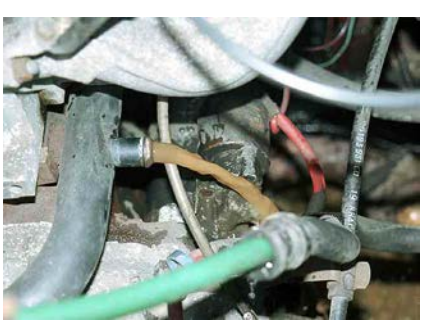

Reverse flushing the cooling system

Coolant The old coolant containing ethylene glycol should be drained off into a drain tray and disposed off in accordance with environmental regulations.

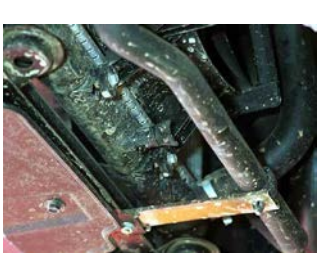

Drain plugs are fitted to some radiators

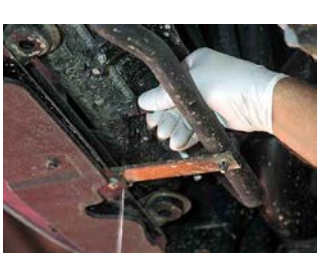

Draining the coolant

Bottom Hose The radiator bottom hose may have to be removed from the water pump to drain the coolant. Removing the pressure cap from the top of the radiator will help the coolant drain out better. Where a remote expansion tank is fitted, it may be necessary to remove the top hose from the radiator or thermostat housing.

Radiator bottom hose removed

Radiator cap

Remote expansion tank

Radiator

Flushing Connect the water hose into the radiator bottom hose, seal with a wedge of cloth and run the water supply until the water runs freely and cleanly from the top of the radiator. Any restriction in the radiator will slow the flow rate. This can be judged by simple observation.

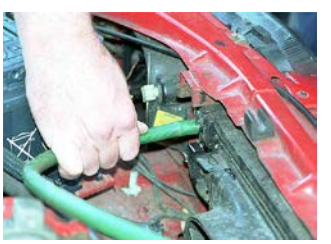
Mains water connected to hose

Clean water running out of top hose

Refilling Fill the system with new coolant after flushing, carry out checks to ensure that the cooling system operates correctly and clean the vehicle before returning it to the customer.

New coolant being added

249. **Worksheet** Inspect water pump.

This task may be required to identify a localized abnormal noise or be a check on a stripped engine to ensure that the pump is serviceable before refitting. It is sometimes necessary to remove the water pump to check that the impeller has not come loose on the spindle. This can cause an overheating problem that is difficult to detect.

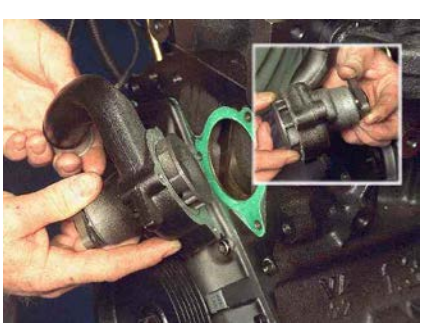
Water pump inspection

Water Pump Bearings Follow the manufacture's instructions for removing the water pump and then check the bearings for wear and tear. Inspect the seals that retain grease in the pump bearings and prevent coolant from leaking from the engine.

Checking water pump bearings

Pulley and Impeller Check at each end that the pulley flange and impeller are secure on the spindle. Look for telltale signs of movement, which are likely to be fresh scores close to the flange or impeller. These components can be tight when cold but become loose as they heat up. Always apply a reasonable force to check for movement.

Checking security of pulley flange…

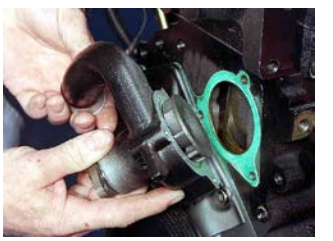
…And impeller

Sealant Always ensure that on replacement all mating faces are clean and that new gaskets and seals are fitted. Apply a thread sealant to bolts that run into coolant passages.

Sealant on gasket and bolts

250. **Worksheet** Inspect heater core for leaks and flow rate.

The heater core can be checked on the vehicle during a pressure test and by looking below the heater for signs of coolant contamination on the vehicle carpet.

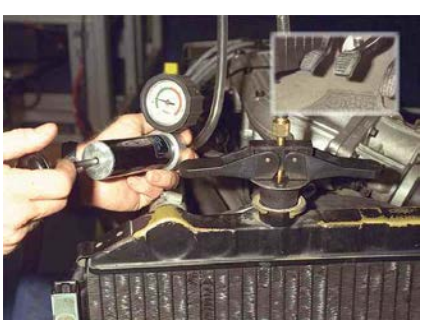
Pressure test and check under the heater

Heater Checking To check the flow rate through the heater, remove both of the heater hoses where they fit to the top of the engine and to the water pump. The water pump connection is the return from the heater and a water hose pushed into the hose can be used to reverse flush and check the flow rate. When water pressure is applied to the heater, observe the flow from the inlet pipe where it has been disconnected from the top of the engine. The flow should become clean and run freely.

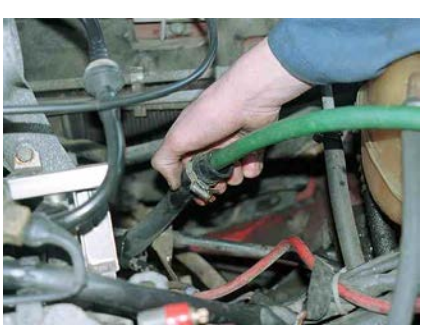
Heater hoses removed for a mains water reverse flush

Flow Rate If the flow rate is less than adequate, there are two possible courses of action. One is to reassemble the hoses and add a cleaning agent to the coolant. Leave it for the prescribed time and repeat the reverse-flush flow-rate test. The other method requires the removal of the heater core for specialized cleaning or replacement.

Adding a cleaning agent to cooling system

Removal of heater core

251. **Worksheet** Inspect heater controls (including automatic temperature devices).

Inspect heater blower motor.

These inspections are carried out on the vehicle in the first place. Perform a check on each of the heater functions. Check heat range and control, air distribution and control, and operation of the blower motor.

Heater controls

Heater Control Cables Look under the dashboard to check the cable connections between the control levers and the heater water valve and air box flap levers. Check the termination on the blower motor and switch where these are visible.

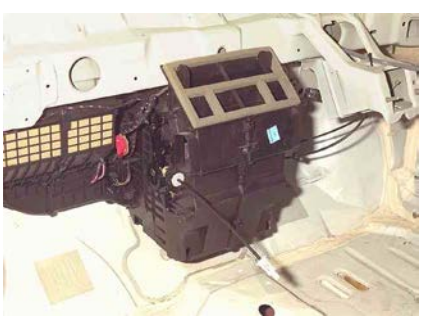
View under fascia of heater and motor

Blower Motor If the heater blower motor is not working correctly, look at the motor brushes and commutator for signs of poor connections or wear. Check the resistor block on the motor if intermediate speeds are not operating.

Heater motor brushes

Motor Supply Voltage Checks Check the electrical supply and ground connections to the motor and resistor pack with a digital multimeter. Readings will vary depending on the test position and the speed selected.

Heater voltage supplies

252. **Worksheet** Measure the current of the heater's blower motor.

Remove covers and trim panels as required to gain access to the blower motor and fan. Check that the fan rotates freely. If access to the motor is difficult, run the motor and listen for unusual noises such as dry bearings.

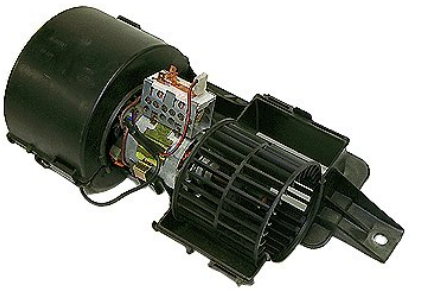

Blower motor

Ammeter Connection Switch OFF the ignition and locate the blower motor's fuse. Using a special adapter or clips and terminals as required, connect an ammeter (a zero to 20 amps scale would be ideal) in place of the fuse. Be particularly careful, as the motor will be run without fused protection. The ammeter should be connected in the correct polarity.

Fuse connection adapter

Blower Operation Turn the blower switch OFF and the ignition ON. Turn the blower switch to each speed setting in turn and note the current draw. Compare the readings to the manufacturer's data if available. If not available, readings in the range as follows would be reasonable: Slow speed 5A, medium speed 9A and full speed 15A.

Heater motor switch

Interpreting the Readings High readings indicate a motor fault; low readings indicate a high resistance in the switch, motor, resistor pack or wiring. Replace the fuse and any other components that have been removed.

Ammeter reading motor current draw

253. **Worksheet** Measure AC pressures, inspect system and report on condition.

Fit a manifold gauge set to the high- and low-pressure connection points. Make sure that no refrigerant is released into the atmosphere.

Gauge set

AC Operation Allow the vehicle interior to reach normal room temperature, which is about 22 ^{0}C. Run the engine and set the AC to maximum with recirculated air. This will ensure it is working at its full rate.

Controls set to maximum cooling

Pressure Readings and Faultfinding Tables Note the pressures and compressor cycle times. Compare to the appropriate table depending on whether a fixed-orifice tube or an expansion valve is used. Note that the information in these tables is a guide – refer to the specific manufacturer's data where available. Click the button to see each fault table. Carry out repairs as required. Tables are at the end of this unit.

Summary Some repairs can involve significant work. However, do not make any compromises. Keep your customers, and yourself, happy and safe.

Read the previous section again and note down some key bullet points here:

-
-
-
-
-

Faultfinding and Inspections

Introduction The secret with finding faults is to have a good knowledge of the system and to work in a logical way. Use manufacturers' data and recommended procedures. This section includes general faultfinding procedures.

Symptoms and Faults Remember that a symptom is the observed result of a fault. The next few screens each state a common symptom and possible faults. It is important to note that faults in one system can produce symptoms that may appear to be caused by another. Also, note that the stated symptoms and faults may vary across different systems.

Pressure Falls Quickly Then Gradually

Possible causes of this symptom are:

Air in the system

Excessive refrigerant.

Pressure gauges

Discharge Pressure Low

Possible causes of this symptom are:

Fault with the compressor

Low refrigerant, particularly if bubbles are seen.

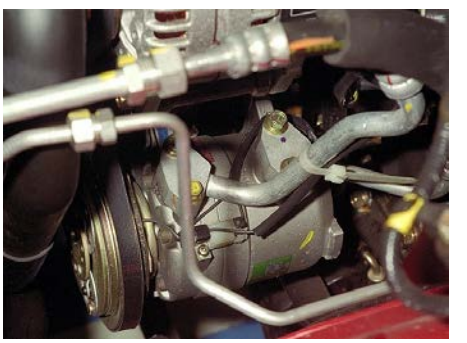
Compressor

Discharge Temperature Is Lower Than Normal

Possible causes of this symptom are:

Frozen evaporator

Thermostatic expansion valve stuck.

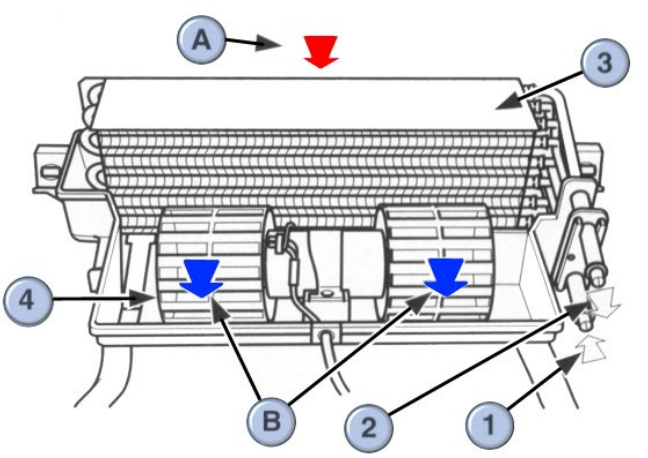

Evaporator[1]

Suction Pressure Too High

Possible causes of this symptom are:

High-pressure valve fault

Excessive refrigerant

Expansion valve open too long.

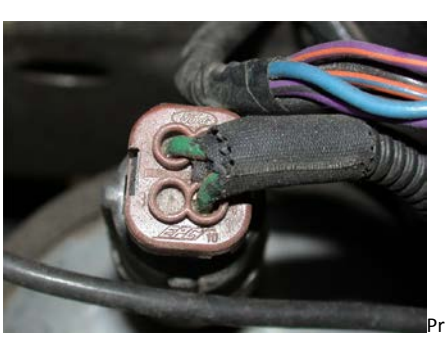
Pressure switch connection

Suction and Discharge Pressures High

Possible causes of this symptom are:

Excessive refrigerant in the system

Condenser not working due to fan fault

Condenser not working because of clogged fins.

Condenser

Suction and Discharge Pressures Low

Possible causes of this symptom are:

Clogged pipes

Kinked pipes.

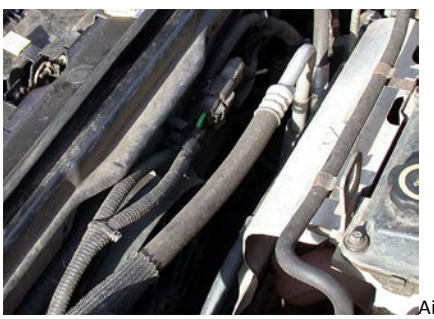

Air conditioning pipes

Refrigerant Loss

Possible causes of this symptom are:

Leaks from joint or seals

Leaks from the condenser, which is quite common due to stone damage

Leaks from any other components.

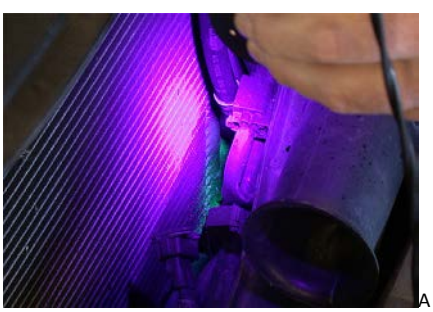

A leaking pipe connection

Systematic Testing Working through a logical and systematic procedure for testing a system is the only reliable way to diagnose a problem. Use these six stages of faultfinding as a guide.

Verify the fault

Collect further information

Evaluate the evidence

Carry out further tests in a logical sequence

Fix the problem

Check all systems.

Faultfinding Procedure As an example of how the stages are applied, assume the reported symptom is simply that the AC is not working. Carrying out the procedures outlined over the next five screens would be a recommended method.

Verify the Fault Check the system yourself to confirm a fault exists. Occasionally a fault is reported when user error is the cause.

AC system checks

Collect Further Information Check general operation. For example, check whether the compressor cuts in and out. Turn the system on full for this test. Check that the fan works at all speeds and that the AC warning light comes on. Let's assume for the purpose of this example that the symptoms are that the warning light does come on, the fan works but the compressor does not cut in. Talking to the customer, we also note that the problem started and gradually got worse on a long journey, until it did not work at all.

AC control switch

Evaluate the Evidence Evaluating the evidence means stopping and thinking! It is easy to imagine complex electrical faults when none exist! The evidence that the problem developed gradually could indicate a leak. However, the compressor not working could indicate an electrical fault. Don't make your mind up completely at this stage – just be guided in the right direction by the evidence. Your knowledge of system operation would tell you that if refrigerant were lost, the pressure switch would not allow the compressor to operate.

Carry Out Further Tests The connection of pressure gauges is the next obvious step in this particular process. For the purposes of this example, let's assume that both the low- and high-pressure gauges read low. A visual inspection also reveals stone damage to the condenser and an oily deposit indicating leakage. Checking with a leak detector confirms that the condenser has holes in it.

Gauges connected

Fix the Problem Using a servicing unit, drain any remaining refrigerant from the system. Fit a new condenser, making sure the pipe joins are sealed, as per the manufacturer's instructions. Evacuate the system and then refill it to the correct level using the servicing unit.

Servicing unit

Check All Systems Run through a full system check to ensure correct operation. Check the compressor belt tension. A further quick check for leaks will ensure the system will stay in good order. Make sure all of the gauges and warning lights operate correctly. This is just in case a connection or wire was knocked loose during the repair work.

Checking belt tension

254. **Worksheet** Inspect the drive belt condition

and tension. Inspect the water pump bearings and seal for wear and leakage. Check the operation of the cooling fan and airflow through the radiator. Always look closely at drive belts for signs of fraying, cracks, glazing on the drive faces and for other deterioration. Old drive belts feel solid when they are cold but can become elastic when hot. Check the belt under normal operating conditions with the engine hot.

Damaged belt

Multi-vee belts

Belt Tension Check the tension on the longest side. For vee belts, a pull of about 13 mm, (or an inch) is normal. Over tightening can damage the water pump and alternator bearings. Under tension can cause the belt to slip. A squeal from the belt when the engine is accelerated indicates slack drive belt tension.

Checking belt tension

Multi-Vee Belts Multi-vee, or ribbed belts, and toothed camshaft drive belts will twist through about 90° if they are correctly adjusted. However, always refer to the manufacturer's data for the correct tension, and the checking and adjustment procedure.

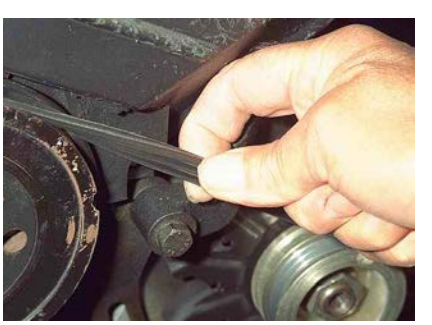
Checking multi-vee belt tension

Water Pump Noise Listen for a whine from defective water pump bearings when the engine is running. Use a stethoscope to locate the noise, if necessary.

Stethoscope test

Water Pump Bearings Another check is to grasp the water pump spindle drive pulley and rock it to feel free play in the bearings. There should not normally be any free play. Look closely at the underside of the water pump for signs of leakage.

Cam Belt Driven Pumps Where the water pump is hidden underneath a belt cover, check whether the owner or driver has noticed a coolant loss. Carry out a long pressure test and look for coolant dripping from behind the cover.

Cam belt cover

Motor Bearings Disconnect the battery ground before checking the fan and bearings of electrically driven fan motors. The check is made by rocking the fan and feeling for free play.

Battery disconnected for safety…

Cooling Fans Look closely at all fans for damage to the blades and for correct attachment to the hub. A fan that is out of alignment or balance will create vibration and premature wear of water pump or motor bearings.

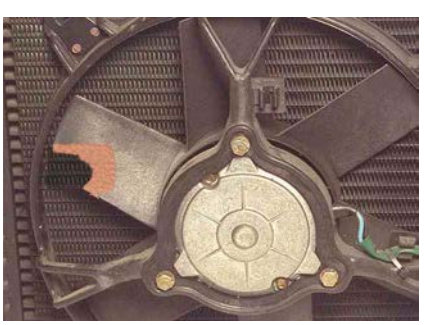
Fan blade damage

Airflow With the engine is running, check that the airflow from the fan is correct. For viscous hub fans, the airflow when the engine is hot should be greater than when the engine is cold. For electrically driven fans, the switch should start the motor when the engine temperature is slightly above normal.

Radiator Look through the airways in the radiator core to check that they are not blocked with dust and dirt. If necessary, blow back through the radiator core with an airline to remove dead insects and other material.

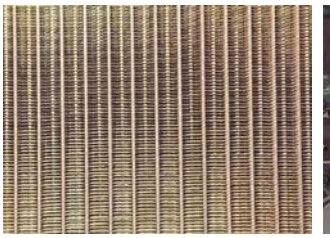
Radiator core

Air line blowing through radiator core

255. **Worksheet** Check the system operating temperature and check the thermostat opening temperature.

When the engine is started from cold, the coolant should not circulate through the top hose. Feel the hose during the warm phase and check that it remains cool. Compare it with the heater hoses, which should heat up gradually as the engine warms up. When the engine reaches operating temperature, the thermostat should open and allow the coolant to flow through the top hose into the radiator.

Feeling top hose temperature

Temperature gauge

Thermostat Checking The thermostat can be checked after removal from the engine. The thermostat is placed in a tester, which has an electric heater element and thermometer in a container of water. The water is heated until the thermostat opens. The temperature reading on the thermometer indicates the opening temperature. This can be compared with the specifications stamped on the thermostat and given in the manufacturer's data.

Thermostat test

Renew if in any doubt

256. **Worksheet** Check operation of in-car heating, including air distribution and fan operation.

This check is often completed during a road test. Always check that the coldest setting of the heat control does actually give air that is close to the outside temperature. This is the most common complaint from drivers on the performance of the heater.

Heater controls…

Are similar…

On most…

Vehicles!

Heater Faults Leakage through water valves, due to incorrect adjustment or deterioration of the internal seals, is the main cause of warm air coming from a heater on the cold setting. Flap control types must be adjusted so that the flap is pulled tightly onto the seals above the heater core and no air flows through.

Heater box flaps must be set correctly

Heater Controls Run through all heater controls and check that the operation is the same as the indicated function. Check heat levels, distributed airflows and blower motor speeds. Check the air passages into the heater for leaves and other materials.

Check for contamination

Air Cooled Engines Air-cooled engines use a heat exchanger that consists of a steel box fitted around an exhaust outlet pipe. The box has a control flap to direct air into or away from the heater ducting. It is possible for a loose joint or perforation to occur in the exhaust pipes, and this will allow exhaust gases to contaminate the air supply.

Exhaust Gases Exhaust gases are extremely dangerous. A check for exhaust gas in the heater air supply must be made at all service intervals on air-cooled engine vehicles. Use a gas analyzer for this check – it is more accurate than checking for smell.

Summary Faultfinding work is rewarding – when you find the fault! Remember to always work in a logical way. The stages of faultfinding can be applied to all systems on the vehicle, complex or simple.

Read the previous section again and note down some key bullet points here:

-
-
-
-
-

Fixed orifice tube system – Faultfinding table

High Pressure	Low pressure	Compressor Interval	Compressor On	Compressor Off	Possible cause
High	High		Continuous		Poor cooling of condenser
High	Normal to high		Continuous		Engine overheating
Normal to high	Normal		Continuous		Too much refrigerant or air in the refrigerant
Normal	High		Continuous		O-rings at fixed orifice tube leaking/ missing
Normal	Normal	Slow or off	Long or continuous	Normal or off	Moisture or too much oil in refrigerant
Normal	Low	Slow	Long	Long	Low pressure switch reacting too late
Normal to low	High		Continuous		Compressor output insufficient
Normal to low	Normal to high		Continuous		Compressor output insufficient
Normal to low	Normal	Fast	Short Short to very short Short to very short Short to very short	Normal Normal to long Short to very short Long	Evaporator blockage Condenser blockage Insufficient refrigerant Evaporator blockage
Normal to low	Low		Continuous		Suction line blocked or low pressure switch sticking

Expansion valve system – Faultfinding table

High Pressure	Low pressure	Possible cause
High	High	Engine overheating; Expansion valve open continuously Temperature in evaporator housing too high Coolant shut-off valve not closing correctly
High	Normal to high	Air in refrigerant circuit
High	Normal	Too much refrigerant
Normal to high	High	Line from compressor to condenser blocked
Normal to high	Normal to high	Too much refrigerant oil Air humidity well above normal
Normal but uneven	Normal but uneven	Moisture in refrigerant circuit impairing operation of expansion valve
Fluctuating	Fluctuating	Temperature sensor of expansion valve faulty
Normal to low	Normal to low	Evaporator blocked Air throughput insufficient
High at compressor, low in high pressure line	Low	Blockage in receiver drier, condenser or high pressure line
Low	High	Suction line constricted Valves in compressor damaged
Low	Low	Suction line or receiver drier constricted Evaporator iced Condenser blocked Refrigerant leak or under filled Blockage in high pressure line Temperature sensor of expansion valve faulty Compressor clutch not disengaging

Manual Drive Train and Axles

Safety, tools & equipment and customer care

Health and Safety

Safety First Before carrying out any service or repair work, refer to all appropriate health and safety guidelines. Always follow all safety procedures and observe safety precautions when working on vehicles. Some of the specific hazards associated with clutch work are listed in this section. General safety advice is also included.

Asbestos Like many types of brake-lining material, some friction discs contain asbestos fibers. Always follow safety precautions when handling asbestos.

Breathing mask in use

Running Engines Running engines are sometimes needed for diagnostics and system checks. A running engine presents two hazards: the first is the risk from rotating components and the second from the accumulation of exhaust gas in the workshop. Remain aware of rotating parts such as the fan, belt and pulleys in the areas where you are likely to be working.

Electrically Driven Fans An electrically driven fan is switched on automatically when the temperature of the coolant in the radiator rises above the switch operating temperature. This can occur even when the ignition is switched off. Always keep fingers out of the fan cowl and, for diagnostic tests, always remove the battery ground cable when the engine does not need to be running.

Exhaust Emissions When running an engine, it is important to prevent the build-up of exhaust gas in the workshop. Use extraction equipment that has special adapters for the gas probe or provide good ventilation.

Hot Components When used for prolonged periods, vehicle components can become very hot. In particular, be careful not to touch the exhaust when working on clutch systems.

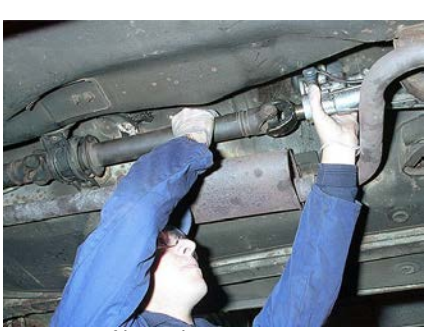

Be aware of hot exhausts

Protective Clothing Overalls should ideally be worn at all times. This protects your clothes as well as your skin. Gloves, goggles, breathing masks, hats and strong footwear may also be necessary.

Personal protective equipment in use

Working Below Vehicles There are a number of hazards to avoid when working under vehicles. One is the very high temperature of exhaust, which can cause severe burns. Another risk is the possibility of getting rust and dirt in the eyes. Avoid these problems by keeping clear of hot surfaces and by wearing goggles. The vehicle must be supported safely before working underneath or alongside it.

Car on a ramp

Heavy Loads Any job that requires the lifting and moving of heavy loads carries with it a certain amount of risk. Many gearboxes fall into this category. Always tackle these jobs in an appropriate manner by making sure you use the recommended lifting equipment. Ask for assistance if necessary.

Gearbox

Jacking and Supporting Only use the recommended jacking and support points when lifting a vehicle. Refer to the manufacturer's instructions if unsure. Ensure that the jack and support stands, which must be used at all times, have an appropriate safe working load (SWL).

Jack and support point

Skin Contact When servicing vehicle systems, avoid skin contact with new and used engine oils. Use barrier cream or non-porous gloves. Be careful with hot oil, particularly when carrying out oil-draining operations. Never keep oily rags in overall or other pockets and change out of oil-contaminated clothing as soon as reasonably possible. Dust from brakes can be dangerous; wear a breathing mask if necessary.

Wear gloves or use barrier cream

Caution/Attention/Achtung! All types of fuel – and particularly the vapors – are highly flammable. They can be ignited from a number of sources. Any exposed flame, a cigarette and, under the right conditions, even a hot object will start a fire.

Electrical Sparks 💻 The most common cause of vehicles in the workshop is from electrical sparks. These can occur during the connection and removal of electrical terminals. Sparks also occur when the engine is cranked with the ignition on and the spark plugs removed. Disconnect the coil or connect the HT cables directly to ground to prevent this.

Short Circuits 💻 Electrical sparks are the most common cause of vehicle fires in the workshop. These can occur during the connection and removal of electrical terminals. Sparks also occur when the engine is cranked with the ignition on and the spark plugs removed. Disconnect the coil or connect the HT cables directly to ground to prevent this.

Original Equipment In consideration of other people's property, always be careful to use approved parts. Original equipment manufacturer's (OEM) parts may be required to meet safety regulations.

Use good quality transmission parts[2]

Refrigerant Refrigerants used in air conditioning systems are dangerous. If it comes in contact with the skin, it produces severe frostbite. Wear protective goggles and gloves at all times. Use gloves designed for the purpose; leather or fabric gloves are NOT suitable. If refrigerant is exposed to open flames or hot surfaces, it produces toxic gases. Always ensure adequate ventilation when working on air-conditioning systems.

Air conditioning system connections

Pressurized Cooling Systems If work has to be carried out on the vehicle heater or the cooling system, there is a risk of scalding. The coolant is run at pressure higher that atmospheric. If the cap is removed when hot, the coolant can boil instantly, ejecting boiling water and steam.

Heater radiator

Rotating Driveline Components 💻 The Ferrari shown here was test driven on a rolling road. It was driven at well in excess of 100 mph! Note how important it is to ensure that all driveline components are in good order.

Transmission Wind Up 💻 On four-wheel drive vehicles, it is possible for the transmission to "wind up" when the front and rear axles are locked together. This is because the two axles may run at slightly different speeds. When on rough ground it is not a problem because the bouncing and movement allows the tires to slip. On hard surfaces, however, a twist or "wind up" of the components such as driveshafts occurs. When the vehicle is jacked up, the transmission can unwind suddenly causing serious injury. This does not occur on vehicles with an unlocked center differential or a viscous drive.

Read the previous section again and note down some key bullet points here:

-
-
-
-
-

Tools and Equipment

Introduction The abbreviation R&R is short for remove and refit components, or remove and reassemble components. Components will usually be removed, inspected and repaired or replaced when a defect has been diagnosed. Other components are replaced, or stripped and cleaned, at scheduled mileage or time intervals. Refer to the Routine Maintenance section for details on these items.

Good tools and equipment are important[2]

Procedures The descriptions provided in this section deal with the components for individual replacement, rather than as a part of other work. Always refer to a workshop manual before starting work. You will also need to look for the recommended procedure, special tools, materials, tightening sequences and torque settings. Some of the common tools and pieces of equipment are described on the following screens.

Refer to data as required

General Toolkit General tools and equipment will be required for most tasks. As your career develops, you will build a collection of tools and equipment. Look after your tools and they will look after you!

Snap-on tools

Soft Hammers These tools allow you to pound hard without causing damage. They are ideal for working on gearboxes. Some types are made of special hard plastics whereas some are described as copper/hide mallets. This type has a copper insert on one side and a hide or leather insert on the other. It is still possible to cause damage, however, so you must still be careful!

Some hammers contain metal shot to give a 'dead blow'[5]

Torque Wrench A good torque wrench is an essential piece of equipment. Many types are available but all work on a similar principle. Most are set by adjusting a screwed cylinder, which forms part of the handle. An important point to remember is that, as with any measuring tool, regular calibration is essential to ensure it remains accurate.

A torque wrench is a useful tool[5]

Air Guns The whole point of power tools is that they do the work so you don't have to! Most air guns have an aluminum housing. This material is lightweight but will last a long time. Air guns produce a "hammer" action. Because of this, impact sockets should be used. Normal sockets can shatter under this load. It is important to remember that air tools need lubricating from time to time.

Air Ratchet These tools are very useful for removing or fitting nuts and bolts. However, it is possible to over tighten if care is not taken. Air tools can be very powerful and will trap your hands! Take adequate precautions at all times.

These tools are very useful[5]

Jacks and Stands Most jacks are simple hydraulic devices. Remember to make sure the safe working load (SWL) is not exceeded. Ensure that any faults with equipment such as this are reported immediately. Axle stands must always be placed under the vehicle supporting the weight before work is carried out.

Always use stands…[5]

After jacking a vehicle[5]

Ramps and Hoists Many ramps are available ranging from large four-post wheel-free types to smaller single-post lifts. These large items should be inspected regularly to ensure they are safe.

Twin post lift[5]

Support Bars When removing gearboxes from some vehicles, it is necessary to support the engine. This is because the engine and gearbox (on front wheel drive vehicles, in particularly) share the same mountings. Most support equipment is a simple steel frame that fits across two support points such as suspension mounts. A chain or cable is connected to the engine and its tension adjusted.

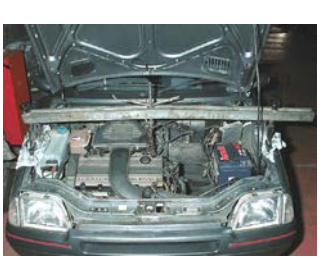

Engine support equipment

Transmission Jack If a complete gearbox has to be removed, it is likely to be heavy! A transmission jack has attachments that allow you to support the gearbox and lower it safely. The equipment is hydraulically operated just like an ordinary jack. Often, the height can be set by using a foot pedal, which leaves both hands free for positioning the unit.

This jack will support a gearbox[5]

Clutch Aligner Kit The clutch disc must be aligned with the cover and flywheel when it is fitted. If not, it is almost impossible, on some vehicles to replace the gearbox. This is because the gearbox shaft has to fit through the disc and into the pilot or spigot bearing in the flywheel. The kit shown here has adaptors to suit most vehicles.

The clutch must be aligned when fitted

Pilot/Spigot Bearing Puller Removing spigot bearings is difficult without a proper puller. This tool has small legs and feet that hook under the bearing. A threaded section is tightened to pull out the bearing.

An internal bearing puller[5]

Bearing Puller Removing some bearings can be difficult without a proper puller. For internal bearings, the tool has small legs and feet that hook under the bearing. A threaded section is tightened to pull out the bearing. External pullers hook over the outside of the bearing and a screwed thread is tightened against the shaft. These tools may be essential for gearbox work.

Internal and external bearing pullers[5]

Slide Hammer A slide hammer is a form of puller. It consists of a steel rod over which a heavy mass slides. The mass is "hammered" against a stop, thus applying a pulling action. The clamp end of the tool can screw either into, or onto, the component. Alternatively, puller legs with feet are used to grip under the sides of the component.

These tools are used for removing shafts[5]

Grease Gun A grease gun is a simple device that pumps grease under pressure. A special connector fits onto a grease nipple. Some types are air-operated but the one shown here is a simple pump-action type.

Used mostly on older or heavy vehicles[5]

Special Turning Tools This tool is used for turning differential bearing nuts and other similar components. It is, for example, ideal for holding the input flange to a rear wheel drive axle as the main nut is undone. Many workshops have 'home made' versions. Most types are adjustable so they will fit a variety of applications.

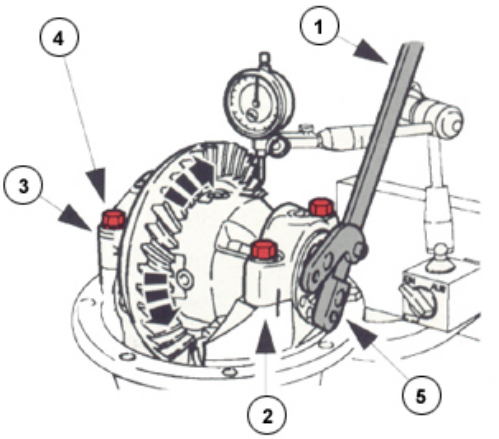

Many special tools of this type are available[1]

Read the previous section again and note down some key bullet points here:

-
-
-
-
-

Test Equipment

Introduction Some special test equipment is used when working with clutches. Remember, you should always refer to the manufacturer's instructions appropriate to the equipment you are using.

Refer to manufacturer's instructions

Torque Wrench A good torque wrench is an essential piece of equipment. Many types are available but all work on a similar principle. Most are set by adjusting a screwed cylinder, which forms part of the handle. An important point to remember is that, as with any measuring tool, regular calibration is essential to ensure it remains accurate.

Torque wrench in use

Pre-Load Torque Gauge A type of torque equipment is used to test the turning torque of some components. A good example of this is shown here. The turning torque, of the final drive pinion, is used to set the pinion bearing preload on some vehicles.

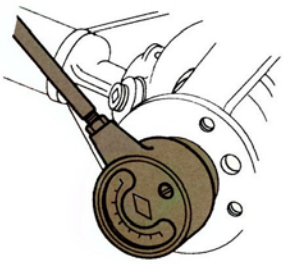

Testing turning torque[1]

Dial Test Gauge A dial test gauge or dial test indicator (DTI) is a useful piece of measuring equipment. It is usually used in conjunction with a magnetic stand. As the needle is moved, the dial (via a series of accurate gears) indicates the distance traveled. The graduations are either hundredths of a millimeter or thousandths of an inch.

DTI[5]

Stand[5]

Straight Edge and Feelers A "straight edge" is, quite simply, a piece of equipment with a straight edge! It is used as a reference for measuring flatness. The straight edge is placed on top of the test subject. The feeler blades are then used to assess the size of any gaps. The feeler blades are sized in either hundredths of a millimeter or thousandths of an inch.

Straight edge[5]

Feeler set[5]

Micrometer and Vernier Caliper A metric micrometer is a measuring instrument designed to measure to an accuracy of 0.01 mm. Its principle of operation is quite simple: a very accurately manufactured screw thread is used with a pitch of 0.5 mm. This means that as it is rotated, one complete turn will move it 0.5 mm. A main scale is marked on the micrometer with 0.5 mm marks. A rotating scale marked from 0 to 50 is used to give the required accuracy. The Vernier caliper works on the principle of two offset scales. It is also capable of giving accurate readings.

Caliper and micrometer kit[5]

Caliper and Dividers Caliper and dividers are simple non-indication measuring tools. They are normally used to compare one size to another. They may be useful for checking a pilot/spigot bearing size, for example.

Machinist's caliper[5]

Dividers[5]

Angle Locator This magnetic device is used to check that the angles of a propshaft are equal. This is important because it ensures that the changing velocity effects of the universal joints are canceled out. The angle locator attaches magnetically to the shaft. A dial is set to zero and then, when it is moved to a new location, the difference in angle is indicated.

This device checks propshaft angles[5]

Accuracy To ensure measuring equipment remains accurate, there are just two simple guidelines:

Look after the kit – test equipment thrown on the floor will not be accurate

Ensure instruments are calibrated regularly – this means being checked against known good equipment.

Micrometer in use

Read the previous section again and note down some key bullet points here:

-
-
-
-
-

Customer Care

Regular Checks Regular servicing is vital for a customer's safety. Carry out checks at all services and report your findings to the customer. Advise customers if anything will need attention before the next scheduled service interval.

Explain any unusual conditions to the customer

Vehicle Condition Respect your customers' vehicle and take precautions to keep them clean. Checking and repairing the clutch is likely to involve you working under the vehicle, and then sitting in the driver's seat. Use seat covers and ensure the steering wheel is cleaned when you have finished.

Seat covers in use

Keep Customers Informed Some customers like to know details of what work has been done to their vehicle – and they have every right to know! Here, an oil leak is being shown to the car's owner. The customer appreciated having the situation explained.

A small problem now but it may get worse

Driving Style Driving style can have a significant effect on the life and condition of a clutch. Customers, of course, are entitled to drive how they wish! However, it may be appropriate to offer tactful advice if a clutch, or driveline component, breaks unexpectedly. Rapid starts, for example, can cause damage to a number of components.

Slipping the Clutch Holding a car with the clutch slipping (on a hill at traffic lights, for example) increases the wear rate. Again, it may be appropriate to offer tactful advice if a clutch wears out before its expected life. Make sure you don't insult the driver.

Stop and apply the parking brake!

Clutch Feel Tell your customers to report any changes in the "feel" of the clutch pedal. Have them contact a service center if, for example, the clutch becomes stiff or a noise is noticed. These may be early warning signs of problems. Reporting them could help the driver avoid the inconvenience of a breakdown.

Test Drives Take the customer on a test drive if necessary. It is a useful way of helping them to describe problems to you. Alternatively, they could drive and demonstrate what is concerning them. Simple problems like wheel-bearing noise can be diagnosed easily in this way.

Shifting Should a customer express concern about gear changing (shifting), carry out a few simple checks before removing the transmission. With the engine stationary, check that the clutch pedal and gear lever can move freely. Check for correct fitment of mats, rubber gaiters and sound-damping material. Look for play and wear in the gear lever guide and engagement of the shift rod bolt in the universal joint. With the engine running, check for correct clutch disengagement.

Changing gear

Transmission Noises Should a customer express concern about transmission noises, a few simple checks should be carried out before doing any repairs. Check that the gaiters and the sound-damping material are fitted correctly on the gear lever. Make sure that the transmission is correctly filled with lubricant.

Gear change gaiter

Expensive Work Should a customer express concern about transmission noises, a few simple checks should be carried out before doing any repairs. Check that the gaiters and the sound-damping material are fitted correctly on the gear lever. Make sure that the transmission is correctly filled with lubricant.

New gearbox in position

Leaks Should a customer express concern about fluid leaks, the leak must be located before attempting any repairs. Clean the transmission and add some fluorescent additive to the transmission oil. Road test the vehicle and then locate the leak using an ultraviolet lamp.

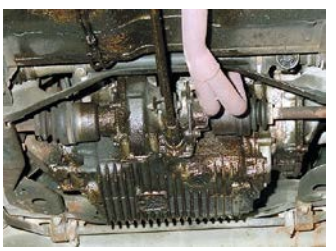
This oil leak was obvious!

Describing Noise Driveline problems often result in unusual noises from the vehicle as it is used. Noise is very difficult to describe! However, the following screen describes some useful terms. These may be useful when discussing problems with your colleagues or customers.

Listening for noise

Noises 'Howling' or 'whining' tend to be noises associated with gears. Such sounds can occur at various speeds and driving conditions or they may be continuous. ”Chuckle” is a rattling noise that sounds like a stick held against the spokes of a spinning bicycle wheel. It usually occurs while decelerating. ”Knock” is very similar to “chuckle” though it may be louder and occurs during acceleration or deceleration.

Causes of Noise Clicking, popping or grinding noises may be noticeable at low speeds and be caused by:

Showing a customer the CV gaiter

Inner or outer constant-velocity joints worn (often due to lack of lubrication so check for split gaiters)

Loose driveshaft

Another component coming in contact with a drive shaft

Damaged or incorrectly installed wheel bearing, brake or suspension components.

Vibration The following problems may cause vibration at normal road speeds:

Damaged tire

Out-of-balance wheels

Out-of-round or damaged tires.

The following may cause shudder or vibration during acceleration:

Damaged powertrain/drivetrain mounts

Excessively worn or damaged outboard or inboard constant-velocity joints.

Summary A customer who is kept informed and treated with respect will return and keep you in a job! Explain things to customers when asked. Such courtesy will be appreciated.

Read the previous section again and note down some key bullet points here:

-
-
-
-
-

Theory and technology

Introduction to Transmission

Introduction Transmission is a general term used to describe all of the components required to transmit power from the engine to the wheels. The requirement is to convert the power from the relatively high velocity and low torque of the engine crankshaft to the variable, usually lower speed and higher torque needed at the wheels. This first section is a general introduction to the transmission system.

Transmission components are important[2]

Types of Transmission The two basic types of transmissions use either a manual gearbox, in which the gears are selected by the driver, or an automatic gearbox, in which the gears are changed automatically. The other driveline components, with the exception of the clutch, are the same for automatic or manual systems.

Manual transmission

Automatic transmission

Front-Wheel Drive Transmission Working from the engine to the wheels, the main components of a typical front-wheel drive transmission system are:

Clutch

Gearbox

Final drive and Differential

Drive shafts.

Clutch

Gearbox

Final drive and differential

Driveshaft

Rear-Wheel Drive Transmission Working from the engine to the wheels, the main components of a typical rear-wheel drive transmission system are: Clutch

Gearbox

Propshaft

Final drive and Differential

Half shafts.

Clutch

Gearbox[2]

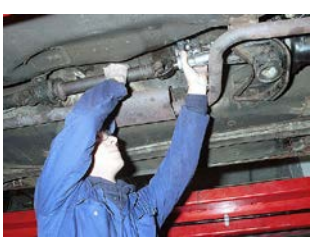
Propshaft

Final drive and differential

Clutch The clutch is fitted between the engine and gearbox. It allows the drive to be disconnected when the pedal is depressed. This is often described as a temporary neutral. The clutch also allows a smooth take up of drive and gears to be changed.

Clutch assembly

Manual Gearbox The clutch is fitted between the engine and gearbox. It allows the drive to be disconnected when the pedal is depressed. This is often described as a temporary neutral. The clutch also allows a smooth take up of drive and gears to be changed.

Torque Converter A torque converter is sometimes called a fluid flywheel (although the two differ slightly) and is used in conjunction with an automatic gearbox. It is in two main parts. As the input section rotates, fluid pressure begins to act on the output section, which is made to rotate. As speed increases, a better drive is made. The drive therefore takes up automatically and smoothly.

Details of a torque converter

Automatic Gearbox A torque converter is sometimes called a fluid flywheel (although the two differ slightly) and is used in conjunction with an automatic gearbox. It is in two main parts. As the input section rotates, fluid pressure begins to act on the output section, which is made to rotate. As speed increases, a better drive is made. The drive therefore takes up automatically and smoothly.

Epicyclic gears are often used in an 'auto-box'

Final Drive A torque converter is sometimes called a fluid flywheel (although the two differ slightly) and is used in conjunction with an automatic gearbox. It is in two main parts. As the input section rotates, fluid pressure begins to act on the output section, which is made to rotate. As speed increases, a better drive is made. The drive therefore takes up automatically and smoothly.

Differential and final drive combination

Differential The differential is a special combination of gears, which allows the driven wheels of a vehicle to rotate at different speeds. When a car makes a turn, the outer wheel has to travel a greater distance than the inner, and hence must rotate at a faster speed. If this did not happen, the drive would break.

The differential can be called a torque equalizer

Driveshafts Two driveshafts are used to pass the drive from the outputs of the final drive to each wheel. Each driveshaft contains two constant-velocity joints. These joints are covered with a rubber boot to keep out water and dirt.

This shaft transmits drive to the wheels

Propshaft On rear-wheel drive vehicles, the drive has to be transferred from the gearbox output to the final drive and differential unit in the rear axle. The propshaft, short for propeller shaft, is a hollow tube with a universal joint at each end. If removed, the universal joints (UJs) must be aligned correctly. A UJ is like a cross with a bearing on each leg. It allows drive to be transmitted through an angle. This is to allow for suspension movement.

Constant Velocity Joint The constant velocity joint is a bit like a UJ. It is used on front-wheel drive driveshafts. It allows a smooth, constant velocity drive to be passed through, even when the suspension moves up and down and the steering moves side to side.

Summary The gearbox is clearly a key part of the transmission system. However, it must work in conjunction with other parts. All should be operating correctly for optimum performance.

Describe the requirements of a constant velocity joint.

Read the previous section again and note down some key bullet points here:

-
-
-
-
-

Purpose of the Clutch Components

Purpose of the Clutch A clutch is a device for disconnecting and connecting rotating shafts. In a vehicle with a manual gearbox, the driver depresses the clutch when changing gear, thus disconnecting the engine from the gearbox. It allows a temporary neutral position for gear changes and also a gradual way of taking up drive from rest.

Automatic Transmission Cars with automatic transmissions do not have clutches as described here. Drive is transmitted from the flywheel to the automatic gearbox by a torque converter, sometimes called a fluid clutch.

Torque converter components

Gearbox Cars with automatic transmissions do not have clutches as described here. Drive is transmitted from the flywheel to the automatic gearbox by a torque converter, sometimes called a fluid clutch.

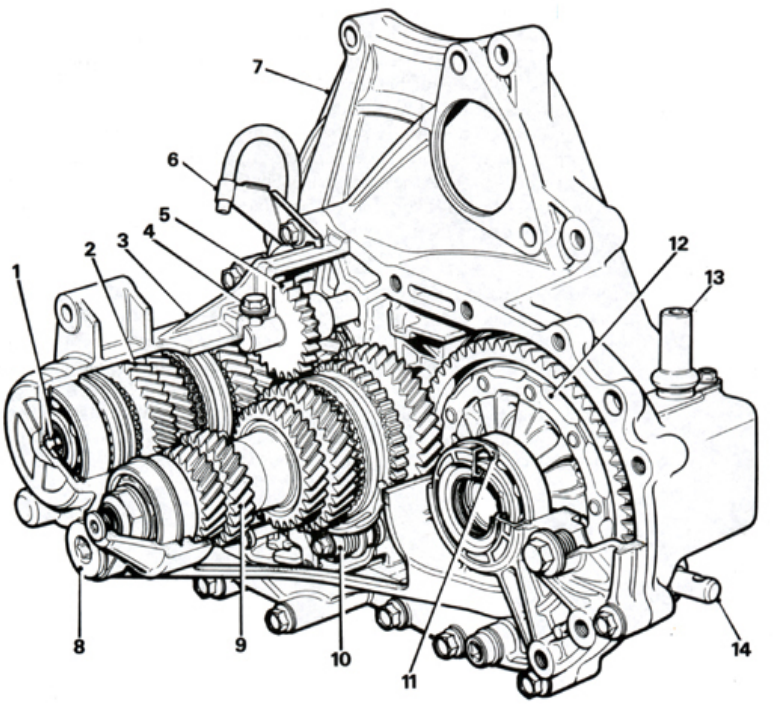

Internal view of a gearbox[1]

Clutch Components Each of the following screens covers one or more typical clutch components. Some are more important than others. The driven plate and the pressure plate are the two main parts.

Driven plate and pressure plate

Reluctor Ring Each of the following screens covers one or more typical clutch components. Some are more important than others. The driven plate and the pressure plate are the two main parts.

Flywheel The flywheel keeps the engine running smoothly between power strokes. It also acts as a surface against which the driven plate can press. A locking plate is used for security of the flywheel.

Driven Plate The driven plate is a friction material plate, which is clamped between the pressure plate and the flywheel. It is splined on to the gearbox input shaft. The small coil springs are to prevent the clutch snatching as drive is taken up.

Pressure Plate This cover of the pressure plate is fixed to the flywheel with a ring of bolts. The fingers in the center act as springs and levers to release the pressure. Drive is transmitted unless the fingers are pressed in toward the flywheel.

Release Bearing This cover of the pressure plate is fixed to the flywheel with a ring of bolts. The fingers in the center act as springs and levers to release the pressure. Drive is transmitted unless the fingers are pressed in toward the flywheel.

Clutch Cable The clutch cable makes a secure connection to the clutch pedal. Strong steel wire is used. Movement of the pedal is, therefore, transferred to the release bearing. A few vehicles use hydraulics to operate the clutch.

Cable Seating Plate and Pad A support is made for the ball end of the cable. Many different methods are used, and this is just one example. A rubber pad prevents metal-to-metal contact. A retaining clip secures the end of the cable.

Bell Housing A general cover is used for the clutch assembly but it is also the way to secure the clutch and gearbox to the engine. Some front-wheel drive clutches are covered with a thin, pressed steel plate.

Summary A general cover is used for the clutch assembly but it is also the way to secure the clutch and gearbox to the engine. Some front-wheel drive clutches are covered with a thin, pressed steel plate.

Clutch components

State the purpose of a release bearing.

Read the previous section again and note down some key bullet points here:

-
-
-

Clutch Operating Mechanisms

Introduction The driver operates the clutch by pushing down a pedal. This movement has to be transferred to the release mechanism. There are two main methods used. These are cable and hydraulic. The cable method is the most common. Now under development, electrically-operated clutches will soon be readily available.

Cable A steel cable is used, which runs inside a plastic-coated steel tube. The cable "outer" must be fixed at each end. The cable "inner" transfers the movement. One problem with cable clutches is that movement of the engine, with respect to the vehicle body, can cause the length to change. This results in a judder/vibration when the clutch is used. This problem has been almost eliminated by careful positioning and by quality engine mountings.

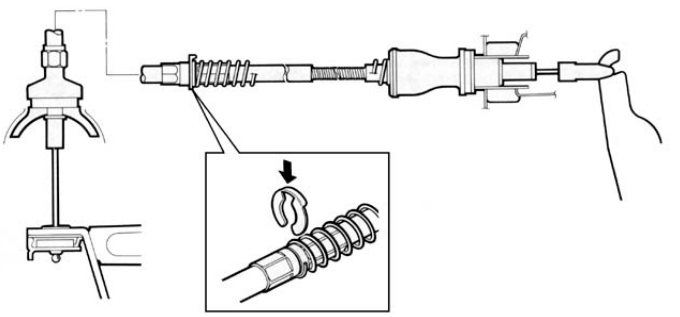

Clutch cable[1]

Cable Operation This clutch cable works on a simple lever principle. The clutch pedal is the first lever. Movement is transferred from the pedal to the second lever, which is the release fork. The fork, in turn, moves the release bearing to operate the clutch.

Hydraulic A hydraulic mechanism involves two cylinders. These are termed the master and slave cylinders. The master cylinder is connected to the clutch pedal. The slave cylinder is connected to the release lever.

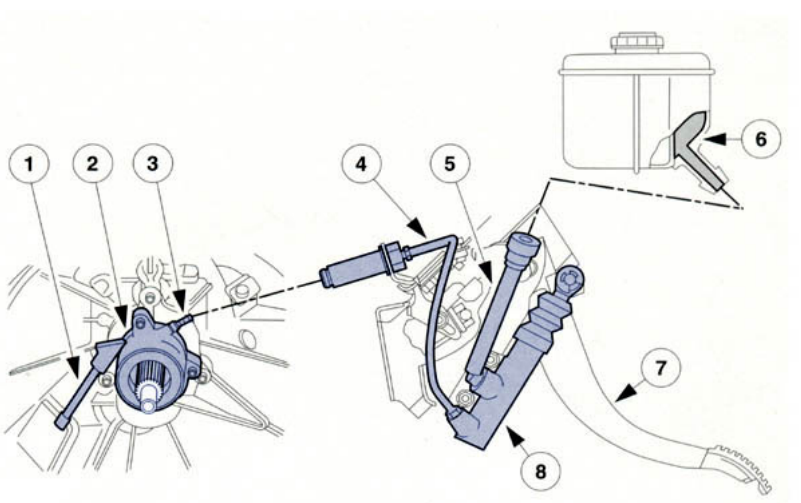

Clutch hydraulic components[1]

Hydraulic Operation The clutch pedal moves the master cylinder piston. This pushes fluid through a pipe, which in turn forces a piston out of the slave cylinder. The movement ratio can be set by the cylinder diameters and the lever ratios.

Electronic Clutch The electronic clutch was developed for racing vehicles to improve the get-away performance. For production vehicles, a strategy has been developed to interpret the driver's intention. With greater throttle openings, the strategy changes to prevent abuse and drive line damage. Electrical control of the clutch-release bearing position is by a solenoid actuator, which can be modulated by signals from the ECU. This reduces the time needed to reach the ideal take-off position and the ability of the clutch to transmit torque is improved. Efficiency of the whole system can therefore be increased.

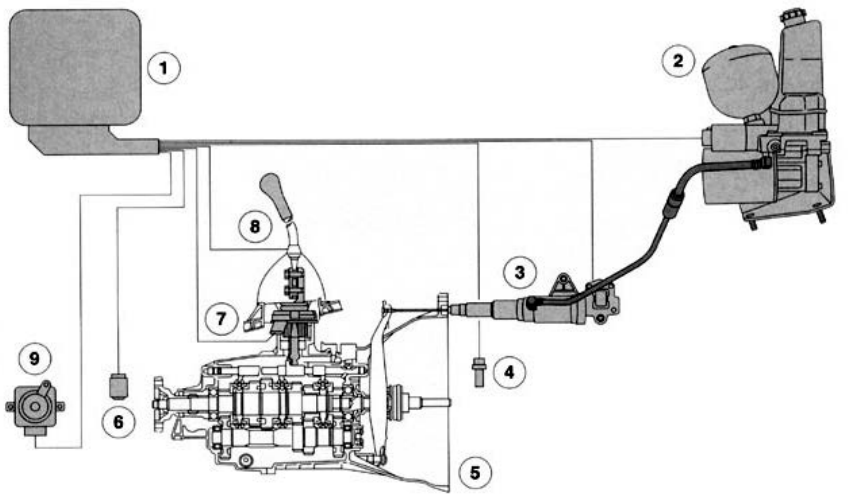

Electronically operated clutch[1]

Describe the operation of a hydraulic clutch mechanism.

Read the previous section again and note down some key bullet points here:

-
-
-
-

Diaphragm Clutch

Basic Functions A clutch is a device for disconnecting and connecting rotating shafts. In a vehicle with a manual gearbox, the driver pushes down the clutch when changing gears to disconnect the engine from the gearbox. It also allows a temporary neutral position for, say, waiting at traffic lights and a gradual way of taking up drive from rest.

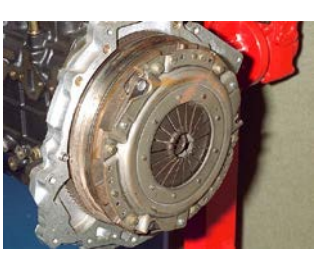

Diaphragm clutch

Clutch Location The exact location of the clutch varies with vehicle design. However, the clutch is always fitted between the engine and the transmission. With few exceptions, the clutch and flywheel are bolted to the rear of the engine crankshaft.

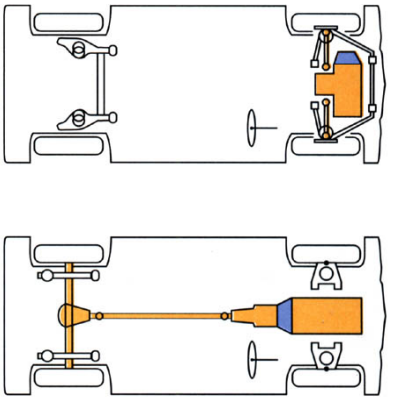

Typical positions for the clutch

Main Parts The clutch is made of two main parts: a pressure plate and a driven plate. The driven plate, often called the clutch disc, is fitted on the shaft, which takes the drive into the gearbox.

Driven plate and pressure plate

Engagement When the clutch is engaged, the pressure plate presses the driven plate against the engine flywheel. This allows drive to be passed to the gearbox. Depressing the clutch moves the pressure plate away, which frees the driven plate.

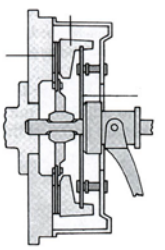

Clutch engaged

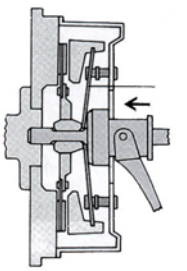

Clutch disengaged

Coil Springs Earlier clutches (and some heavy-duty types) use coil springs instead of a diaphragm. However, the diaphragm clutch replaced the coil-spring type because it has the following advantages:

It is not affected by high speeds. (Coil springs can be thrown outward.)

The low pedal force makes for easy operation.

It is light and compact.

The clamping force increases or at least remains constant as the friction lining on the plate wears.

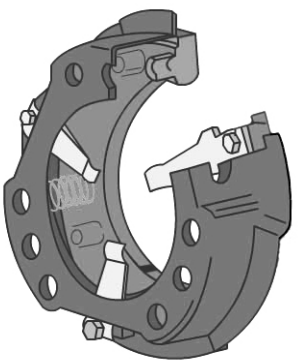

Coil spring clutch assembly

Movement of the Diaphragm Clutch 💻 The animation shows the movement of the diaphragm during clutch operation. The method of controlling the clutch is quite simple. The mechanism consists of either a cable or hydraulic system.

Clutch Shaft The clutch shaft, or gearbox input shaft, extends from the front of the gearbox. Most shafts have a smaller section or spigot, which extends from its outer end. This rides in a spigot bearing in the engine crankshaft flange. The splined area of the shaft allows the clutch disc to move along the splines. When the clutch is engaged, the disc drives the gearbox input shaft through these splines.

Gearbox input shaft

Clutch Disc The clutch disc is a steel plate covered with frictional material. It fits between the flywheel face and the pressure plate. In the center of the disc is the hub, which is splined to fit over the splines of the input shaft. As the clutch is engaged, the disc is firmly squeezed between the flywheel and pressure plate. Power from the engine is transmitted by the hub to the gearbox input shaft. The width of the hub prevents the disc from rocking on the shaft as it moves along the shaft.

Clutch disc or driven plate

Frictional Facings The clutch disc has frictional material riveted or bonded on both sides. These frictional facings are either woven or molded. Molded facings are preferred because they can withstand high-pressure plate-loading forces. Grooves are cut across the face of the friction facings to allow for smooth clutch action and increased cooling. The cuts also make a place for the facing dust to go as the clutch lining material wears.

Friction material

Health Hazards The frictional material wears as the clutch is engaged. At one time asbestos was commonly used. Because of the health hazards resulting from asbestos, new lining materials have been developed. The most commonly used types are paper-based and ceramic materials. They are strengthened by the addition of cotton and brass particles and wire. These additives increase the torsional strength of the facings and prolong the life of the clutch.

Danger – asbestos!

Wave Springs The facings are attached to wave springs, which cause the contact pressure on the facings to rise gradually. This is because the springs flatten out when the clutch is engaged. These springs eliminate chatter when the clutch is engaged. They also help to move the disc away from the flywheel when it is disengaged. The wave springs and facings are attached to the steel disc.

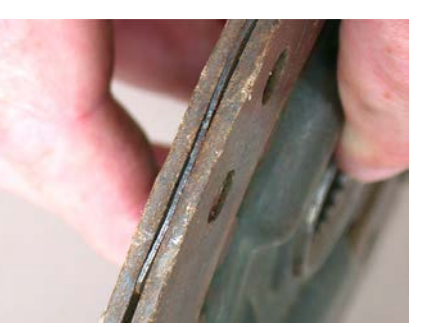
These springs eliminate chatter

Types of Clutch Discs There are two types of clutch discs: rigid and flexible. A rigid clutch disc is a solid circular disc fastened directly to a center splined hub. The flexible clutch disc has torsional dampener springs that circle the center hub.

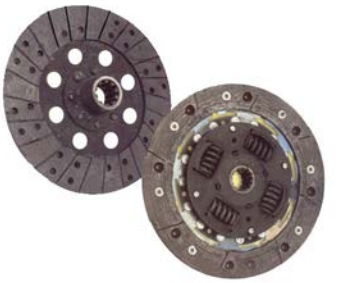

Solid and flexible discs

Shock Absorbing The dampener is a shock-absorbing feature built into a flexible clutch disc. The primary purpose of the flexible disc is to absorb power impulses from the engine that would otherwise be transmitted directly to the gears in the transmission. A flexible clutch disc has torsion springs and friction discs between the plate and hub of the clutch.

Damping springs

Sudden Loading When the clutch is engaged, the springs cushion the sudden loading by flexing and allowing some twist between the hub and plate. When the loading is over, the springs release and the disc transmits power normally. The number, and tension, of these springs is determined by the amount of engine torque and the weight of the vehicle. Stop pins limit this torsional movement to a few millimeters.

Pressure Plate Assembly The pressure plate squeezes the clutch disc onto the flywheel when the clutch is engaged. It moves away from the disc when the clutch is disengaged. These actions allow the clutch disc to transmit, or not transmit, the engine's torque to the gearbox.

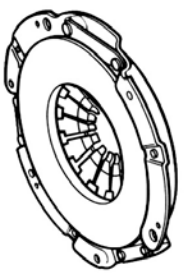

Details of the pressure plate

Spring Loading A pressure plate is a large spring-loaded clamp that is bolted to, and rotates with, the flywheel. The assembly includes a metal cover, heavy release springs and a metal pressure ring that provides a friction surface for the clutch disc. It also includes a thrust ring or fingers for the release bearing, and release levers.

Pressure plate

Release Levers The release levers release the holding force of the springs when the clutch is disengaged. Some pressure plates are of a "semi-centrifugal” design. They use centrifugal weights, which increase the clamping force on the thrust springs as engine speed increases.

Levers release the holding force

Diaphragm Spring The diaphragm spring assembly is a cone-shaped diaphragm spring between the pressure plate and the cover. Its purpose is to clamp the pressure plate against the clutch disc. This spring is normally secured to the cover by rivets. When pressure is exerted on the center of the spring, the outer diameter of the spring tends to straighten out. When pressure is released, the spring resumes its normal cone shape.

Cone shaped diaphragm spring

Clutch Release The center portion of the spring is slit into a number of fingers that act as release levers. When the clutch is disengaged, these fingers are depressed by the release bearing. The diaphragm spring pivots over a fulcrum ring. This makes its outer rim move away from the flywheel. The retracting springs pull the pressure plate away from the clutch disc to disengage the clutch.

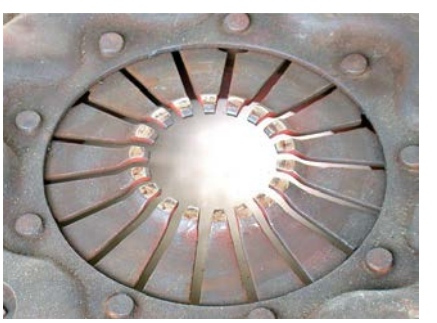

Fingers

Clutch Engagement As the clutch is engaged, the release bearing is moved away from the release fingers. As the spring pivots over the fulcrum ring, its outer rim forces the pressure plate tightly against the clutch disc. At this point, the clutch disc is clamped between the flywheel and pressure plate.

Clutch Assembly The individual parts of a pressure plate assembly are contained in the cover. Most covers are vented to allow heat to escape and air to enter. Other covers are designed to provide a fan action to force air circulation around the clutch assembly. The effectiveness of the clutch is affected by heat. Therefore, by allowing the assembly to cool, it works better.

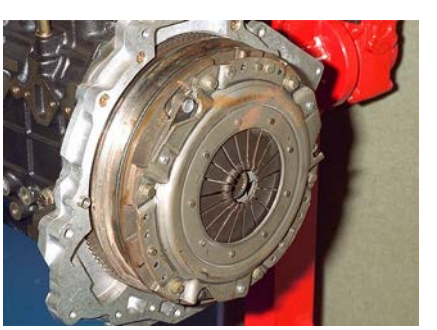

Clutch cover

Describe the shock absorbing features of a clutch disc.

Read the previous section again and note down some key bullet points here:

-
-
-
-
-

Coil Spring Clutch

Coil Spring Pressure Plate Coil spring pressure plate assemblies use helical springs that are evenly spaced around the inside of the pressure plate cover. These springs exert pressure to hold the pressure plate against the flywheel.

Coil Spring Clutch

Release Levers During clutch disengagement, levers release the holding force of the springs and the clutch disc no longer rotates with the pressure plate and flywheel. Usually, these pressure plates have three release levers. Each lever has two pivot points.

Disengagement levers

Pivot Point One pivot point attaches the lever to a pedestal cast into the pressure plate. The other attaches the lever to a release yoke that is bolted to the cover. The levers pivot on the pedestals and release lever yokes. This moves the pressure plate through its engagement and disengagement operations.

Each lever has two pivot points

Disengagement To disengage the clutch, the release bearing pushes the inner ends of the release levers toward the flywheel. The outer ends of the release levers move to pull the pressure plate away from the clutch disc. This action compresses the coil springs and disengages the clutch.

Engagement When the clutch is engaged, the release bearing moves and allows the springs to exert pressure. This holds the pressure plate against the clutch disc, which in turn forces the disc against the flywheel. The engine power is therefore transmitted to the gearbox through the clutch disc.

The disc is forced against the flywheel

Describe how a clutch is disengaged.

Read the previous section again and note down some key bullet points here:

-
-
-
-
-

Other Types of Clutches

Introduction The simple definition of a clutch is something that engages or disengages drive. A number of different types of clutches are used for this purpose. Some of these are examined briefly on the following screens.

Automatic Transmission Automatic transmissions use a torque converter, or fluid flywheel, to couple the engine and the gearbox. The torque converter is a fluid coupling in which one rotating part causes transmission fluid to rotate. This imparts a rotation to another part, which is connected to the gearbox.

Automatic gearbox

Torque Converter The coupling action of the torque converter, or fluid clutch, allows slippage for when the car is starting from rest. As the car gains speed, the slippage is reduced, and at cruising speeds, the driven member turns almost as fast as the driving member does. Some modern systems lock the two together at high speed to eliminate slip. An automatic gearbox usually contains epicyclic or planetary gears. Clutches and brake bands are used for engaging the desired gears.

Fluid clutch

Multiplate Clutches Multiplate clutches are used in specialized applications such as for very high-performance vehicles. Some motorcycles and heavy commercial vehicles also use clutches of this type. The principle is the same as a single-plate clutch, except that with multiple plates, greater power can be transmitted.

Motor cycle clutch

Automatic Gearbox Clutch A common use of a multiplate clutch is in an automatic gearbox. This is because a number of clutches are needed to control the gears. As space is limited, multiple plates are used to allow all of the power to be transmitted. Modern limited-slip differentials also make use of the multiplate clutch technique.

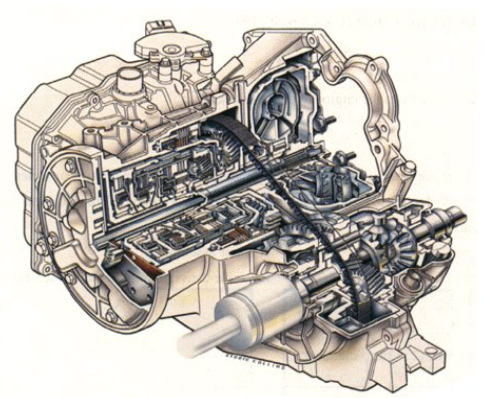

Clutches as part of an automatic gearbox[2]

High Performance Clutch Many high-performance clutches assemblies use multiple-clutch discs. An intermediate plate is used in these assemblies to separate the clutch discs.

A good clutch is important[2]

Operation When the clutch is engaged, the first clutch disc is held between the clutch pressure plate and intermediate plate, and the second clutch disc is held between the intermediate plate and the flywheel. When disengaged, the intermediate plate, flywheel, and pressure plate assembly rotate as a unit, while the clutch discs, which are not in contact with the plates, rotate freely within the assembly and do not transmit power to the transmission.

High performance clutch (Delphi)

Summary A clutch will continue to work for many miles of trouble-free driving. However, a sensible driving technique and regular quick checks can help to avoid problems.

Describe the operation of a multiplate clutch as it is engaged.

Read the previous section again and note down some key bullet points here:

-
-
-
-
-

Gearbox Operation

Introduction A transmission system gearbox is required because the power of an engine consists of speed and torque. Torque is the twisting force of the engine's crankshaft and speed refers to its rate of rotation. The transmission can adjust the proportions of torque and speed delivered from the engine to the driveshafts. When torque is increased, speed decreases and when speed is increased, the torque decreases. The transmission also reverses the drive and provides a neutral position when required.

Types of Gear Helical gears are used for almost all modern gearboxes. They run more smoothly and operate more quietly. Earlier "sliding mesh" gearboxes used straight-cut gears, as these were easier to manufacture. Helical gears do produce some sideways force when operating, but this is dealt with by using thrust bearings.

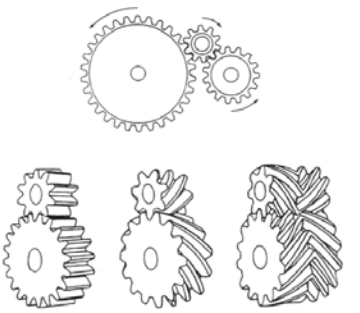

Straight cut and helical gears

Gearbox For most light vehicles, a gearbox has five forward gears and one reverse gear. It is used to allow operation of the vehicle through a suitable range of speeds and torque. A manual gearbox needs a clutch to disconnect the engine crankshaft from the gearbox while changing gears. The driver changes gears by moving a lever, which is connected to the box by a mechanical linkage.

Modern Ford gearbox[2]

Power, Speed and Torque The gearbox converts the engine power by a system of gears, providing different ratios between the engine and the wheels. When the vehicle starts to move, the gearbox is placed in first, or low gear. This produces high torque but low wheel speed. As the car speeds up, the next higher gear is selected. With each higher gear, the output turns faster but with less torque.

Pontiac six-speed gear selector

Top Gears Fourth gear on most rear-wheel-drive light vehicles is called direct drive because there is no gear reduction in the gearbox. In other words, the gear ratio is 1:1 The output of the gearbox turns at the same speed as the crankshaft. For front-wheel drive vehicles, the ratio can be 1:1 or slightly different. Most modern light vehicles now have a fifth gear. This can be thought of as a kind of overdrive because the output always turns faster than the engine crankshaft.

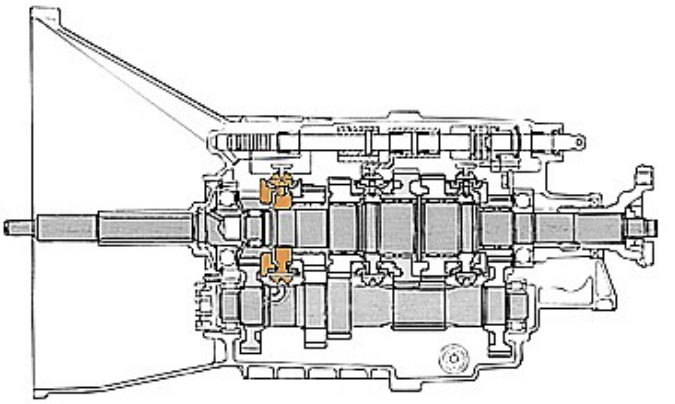

F ourth gear is often 'straight through'[1]

Gearbox Input Power travels in to the gearbox via the input shaft. A gear at the end of this shaft drives a gear on another shaft called the countershaft or layshaft. A number of gears of various sizes are mounted on the layshaft. These gears drive other gears on a third motion shaft also known as the output shaft.

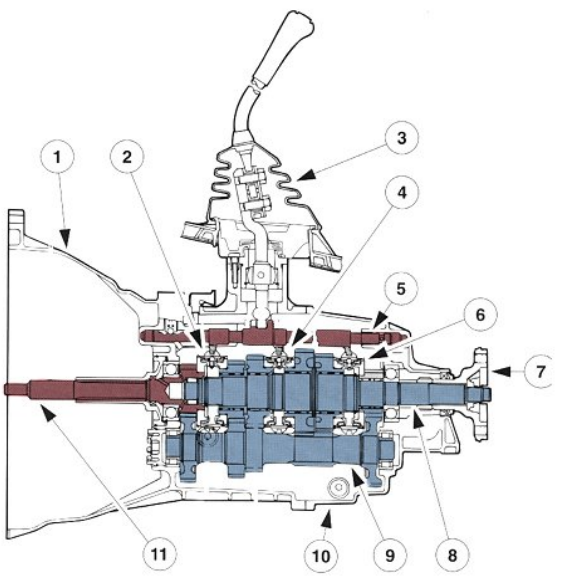

Sectioned view of a gearbox[1]

Sliding Mesh Older vehicles used sliding-mesh gearboxes. With these gearboxes, the cogs moved in and out of contact with each other. Gear changing was, therefore, a skill that took time to master! These have now been replaced by constant-mesh gearboxes.

Constant Mesh The modern gearbox still produces various gear ratios by engaging different combinations of gears. However, the gears are constantly in mesh. For reverse, an extra gear called an idler operates between the countershaft and the output shaft. It turns the output shaft in the opposite direction to the input shaft.

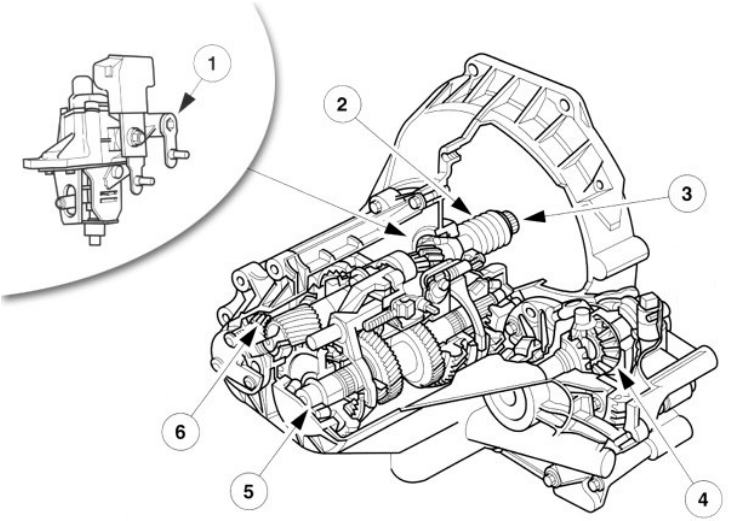

FWD gearbox (transaxle)[1]

Power Flow (RWD) Note how in each case, with the exception of reverse, the gears do not move. This is why this type of gearbox has become known as constant mesh. In other words, the gears are running in mesh with each other at all times.

Power Flow (FWD) In constant mesh boxes, dog clutches are used to select which gears will be locked to the output shaft. These clutches, which are moved by selector levers, incorporate synchromesh mechanisms.

Summary In constant mesh boxes, dog clutches are used to select which gears will be locked to the output shaft. These clutches, which are moved by selector levers, incorporate synchromesh mechanisms.

Read the previous section again and note down some key bullet points here:

-
-
-
-
-

Gears and Components

Introduction There is a wide range of gearboxes in use. However, although the internal components differ, the principles remain the same. The examples in this section are, therefore, useful for learning the way in which any gearbox works.

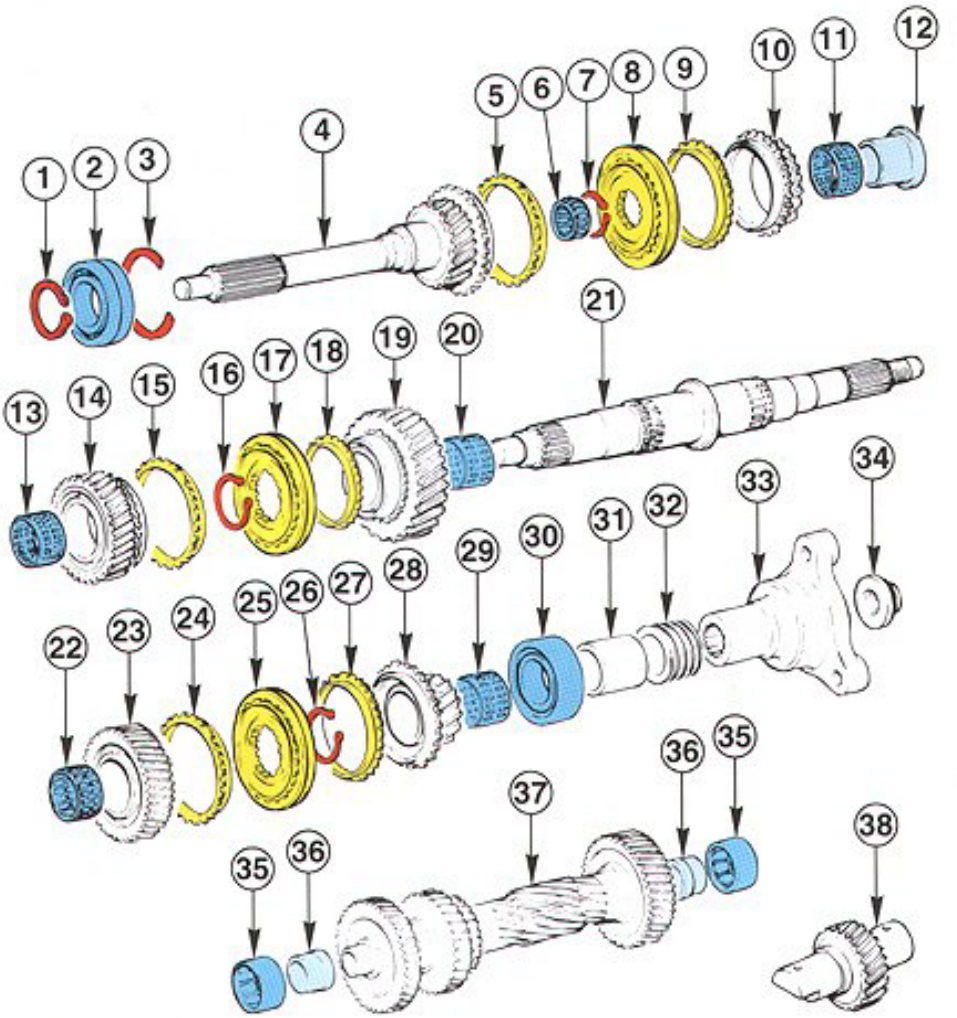

Gearbox components[1]

Input Shaft The input shaft transmits the torque from the clutch, via the countershaft, to the transmission output shaft. It runs inside a bearing at the front and has an internal bearing, which runs on the mainshaft, at the rear. The input shaft carries the countershaft driving gear and the synchronizer teeth and cone for fourth gear.

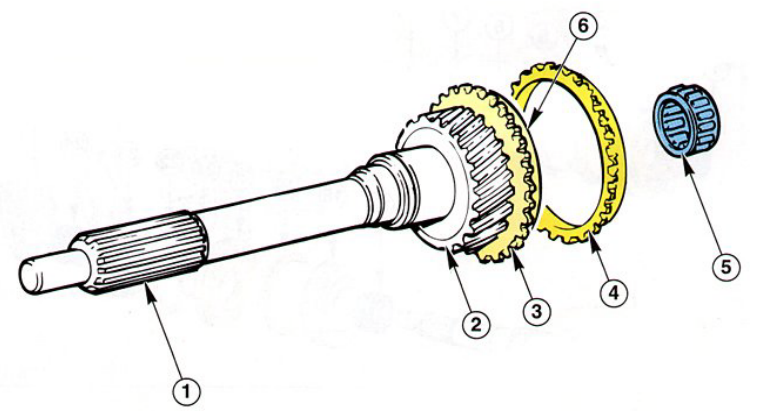

Details of the input shaft[1]

Mainshaft or Output Shaft
The mainshaft is mounted in the transmission housing at the rear and the input shaft at the front. This shaft carries all the main forward gears, the selectors and clutches. All the gears run on needle roller bearings. The gears run freely unless selected by one of the synchronizer clutches.

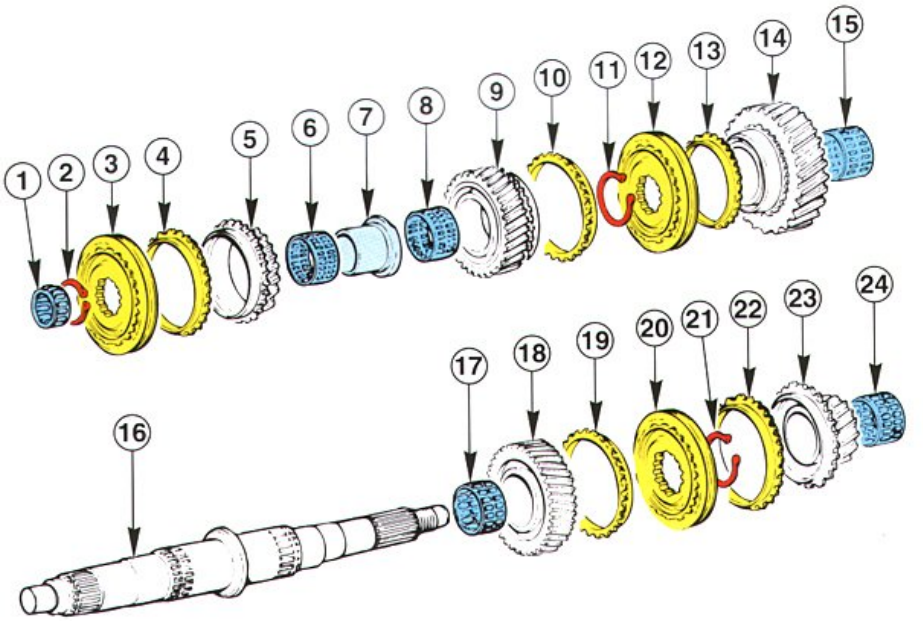

D
etails of the mainshaft[1]

Countershaft The countershaft is sometimes called a layshaft. It is usually a solid shaft containing four or more gears. Drive is passed from here to the output shaft, in all gears except fourth. The countershaft runs in bearings, fitted in the transmission case, at the front and rear.

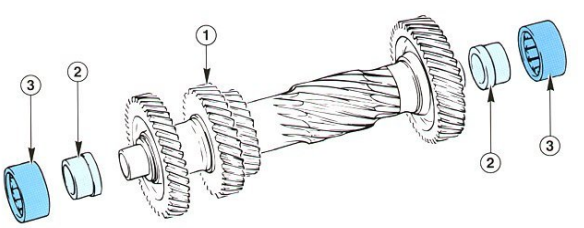

Details of the countershaft[1]

Reverse Idler Gear An extra gear has to be engaged to reverse the direction of the drive. A low ratio is used for reverse, even lower than first gear in many cases. The reverse idler connects the reverse gear to the countershaft.

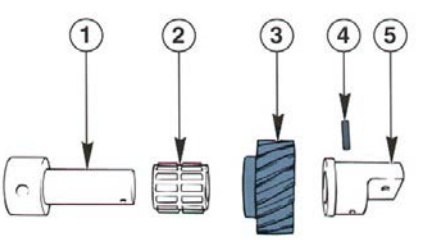

Details of the reverse gear idler[1]

Selector Mechanism An interlock is used on all gearboxes to prevent more then one gear from being selected at any one time. If this were not prevented, the gearbox would lock, as the gears would be trying to turn the output at two different speeds – at the same time. The selectors are U-shaped devices that move the synchronizers.

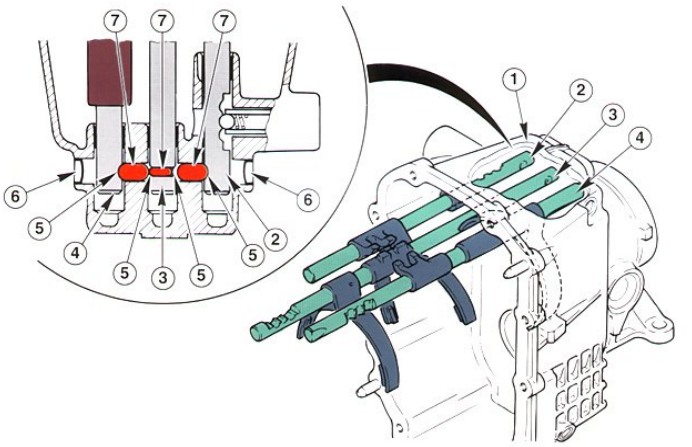

Details of the selector mechanism[1]

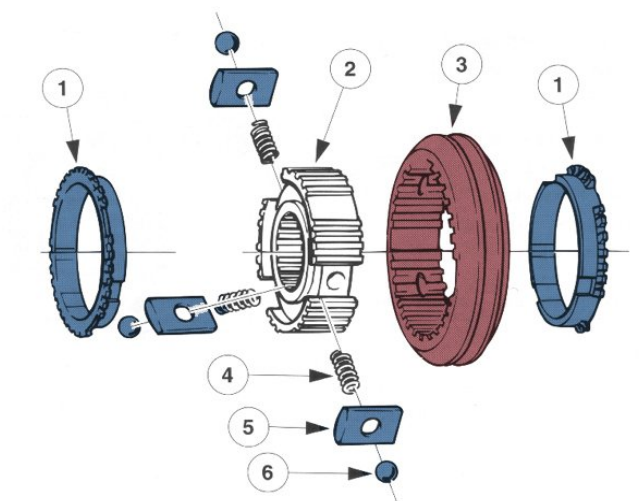

D

etails of the selector and synchronizer[1]

Selector and Synchronizer Most gearboxes have three synchronizers. Their task is to bring the chosen gear to the correct speed for easy selection. The unit consists of cone clutches to synchronize speed, and dog clutches to connect the drive.

Transmission Fluid The transmission fluid must meet the following requirements:

Viscosity must be largely unaffected by temperature

High aging resistance (gearboxes are usually filled for life)

Minimal tendency to foaming

Compatibility with different sealing materials.

Only the specified transmission fluid should be used when topping off or filling after dismantling and reassembly. Otherwise, bearing and tooth-flank damage can occur.

A wide range of lubricants is available

Overdrive On earlier vehicles, a four-speed gearbox was the norm. Further improvements in operation could be gained by fitting an overdrive. This was mounted on the output of the gearbox (RWD). In fourth gear, the drive ratio is usually 1:1. Overdrive would allow the output to rotate faster than the input, hence the name. Most gearboxes now incorporate a fifth gear, which is effectively an overdrive but does not form a separate unit.

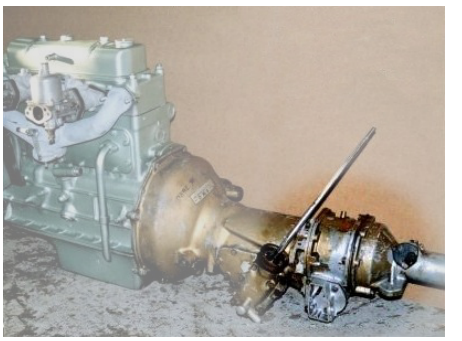

Early overdrive unit in position

Summary The transmission gearbox on all modern cars is a sophisticated component. However, the principle of operation does not change because it is based on simple gear ratios and clutch operation. Most current gearboxes are five speed, constant mesh and use helical gears.

Nascar[2]

State a typical ratio AND describe the process of engaging reverse gear.

State FOUR requirements of transmission fluid.

Read the previous section again and note down some key bullet points here:

-
-
-
-

Gear Change Mechanisms

Introduction On all modern gearboxes, the selection of different ratios is achieved by locking gears to the mainshaft. A synchromesh and clutch mechanism does this when moved by a selector fork. The selector fork is moved by a rod, or rail, which in turn is moved by the external mechanism and the gearstick.

Easy gear changing improves comfort[2]

Single Rail System To save space, some manufacturers use a single selector shaft. This means the shaft has to twist and move lengthways. The twisting allows a finger to make contact with different selector forks. The lengthways movement pushes the synchronizers into position. All of the selector forks are fitted on the same shaft.

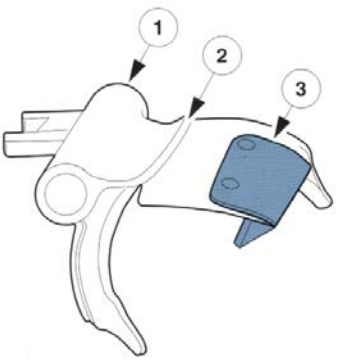

G

ear shift or selector fork[1]

Two Rail System On a two-shaft system, the main selector shaft often operates the first/second gear selector fork. An auxiliary shaft operates the third/fourth selector fork.

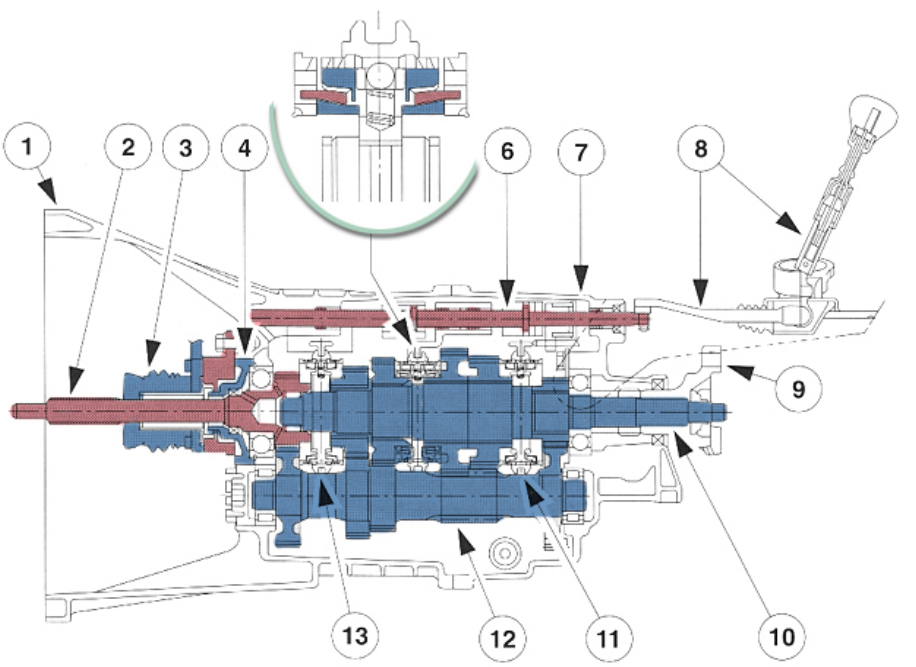

Double selector shaft[1]

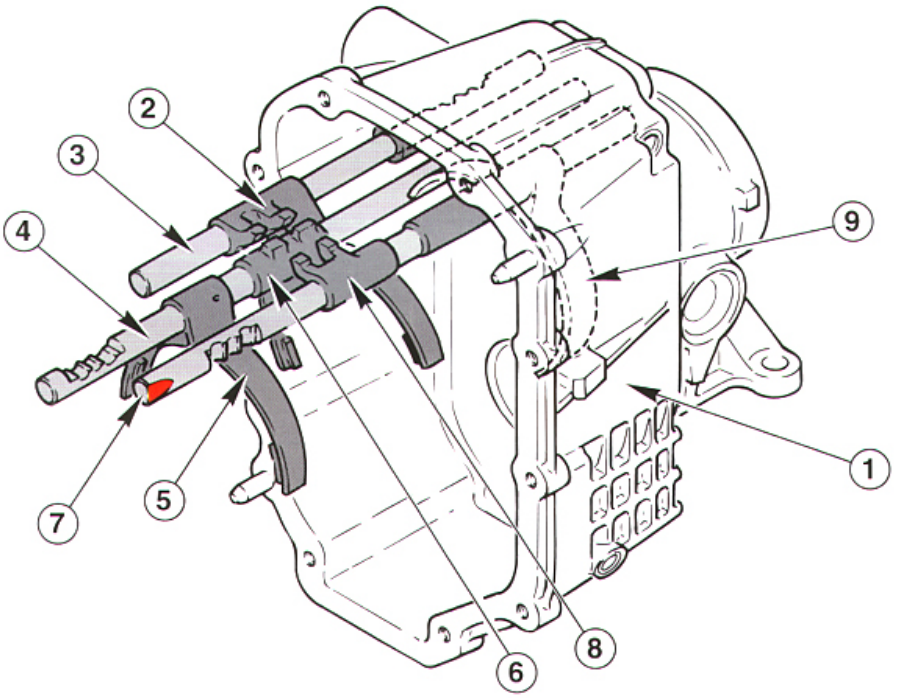

Three-Rail System The three-rail, or three-shaft system, is similar to the two-shaft type. However, each shaft can be moved lengthways. In turn, the shafts will move the first/second, third/fourth or fifth/reverse forks.

T

riple selector shaft[1]

External Linkages The three-rail, or three-shaft system, is similar to the two-shaft type. However, each shaft can be moved lengthways. In turn, the shafts will move the first/second, third/fourth or fifth/reverse forks.

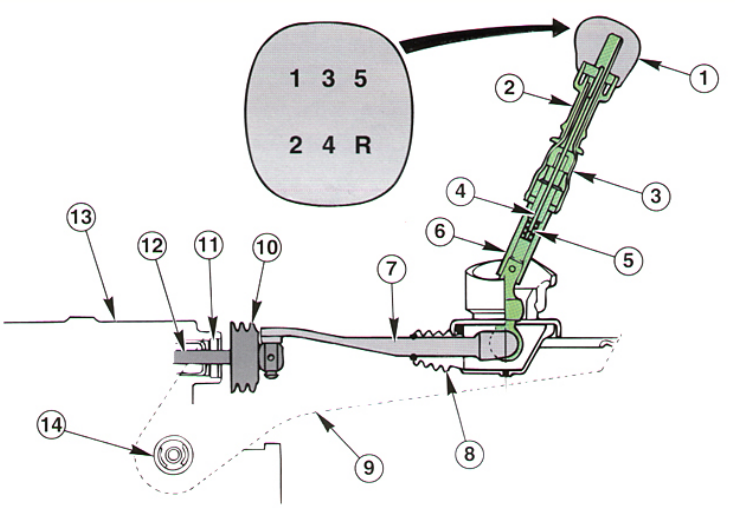

Rod operated shift mechanism[1]

Cable System The three-rail, or three-shaft system, is similar to the two-shaft type. However, each shaft can be moved lengthways. In turn, the shafts will move the first/second, third/fourth or fifth/reverse forks.

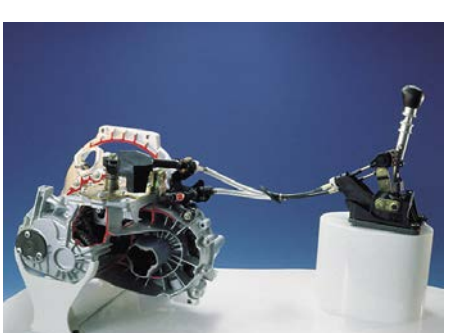

Ford cable change[2]

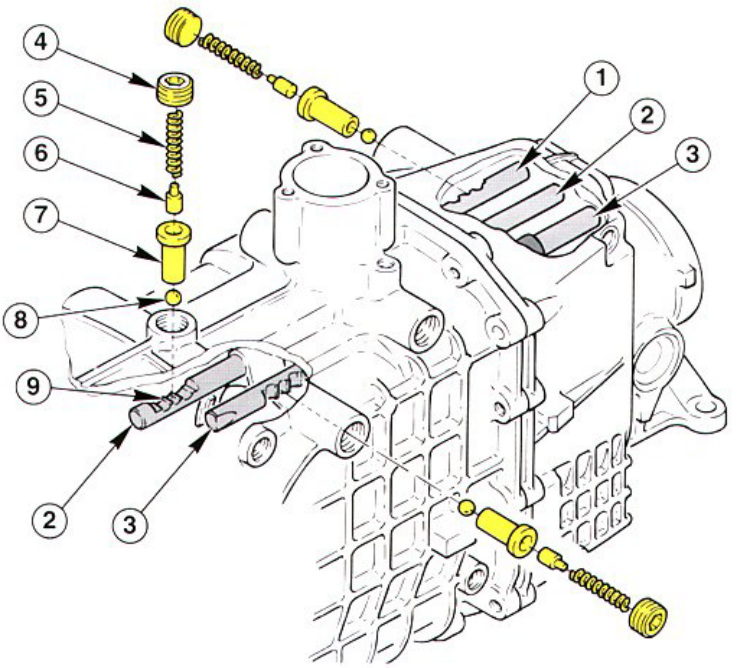

Ball and spring detent[1]

Detent Mechanism A detent mechanism is used to hold the selected gear in mesh. In most cases, this is just a simple ball and spring acting on the selector shaft(s). A gearbox with the detent mechanisms highlighted is shown here.

Interlocks Gear selection interlocks are a vital part of a gearbox. They prevent more than one gear from being engaged at any one time. When any selector clutch is in mesh, the interlock will not allow the remaining selectors to change position. As the main selector shaft is turned by side-to-side movement of the gear stick, the gate restricts the movement. The locking plate, shown as number 15, will only allow one shaft to be moved at a time. Because the gate restricts the movement, selection of more than one gear is prevented.

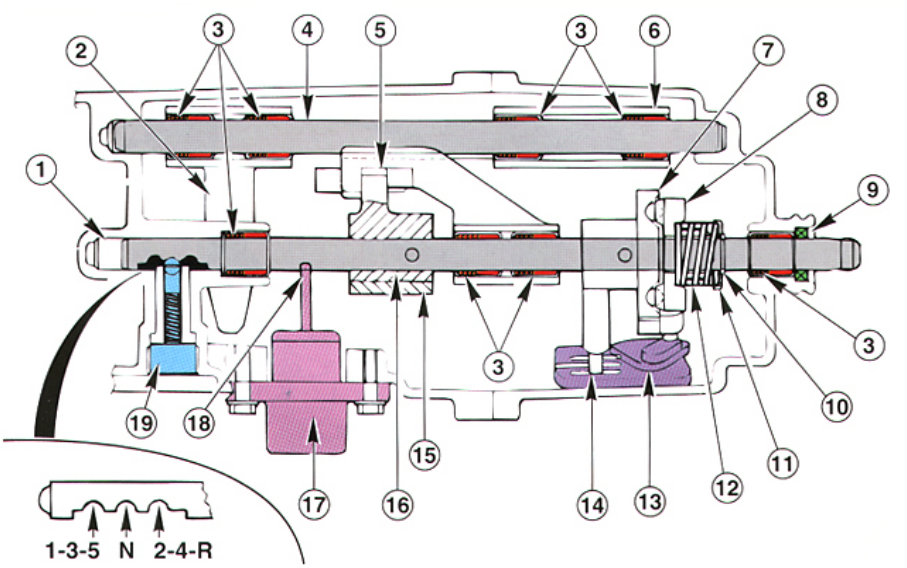

Gearshift mechanism[1]

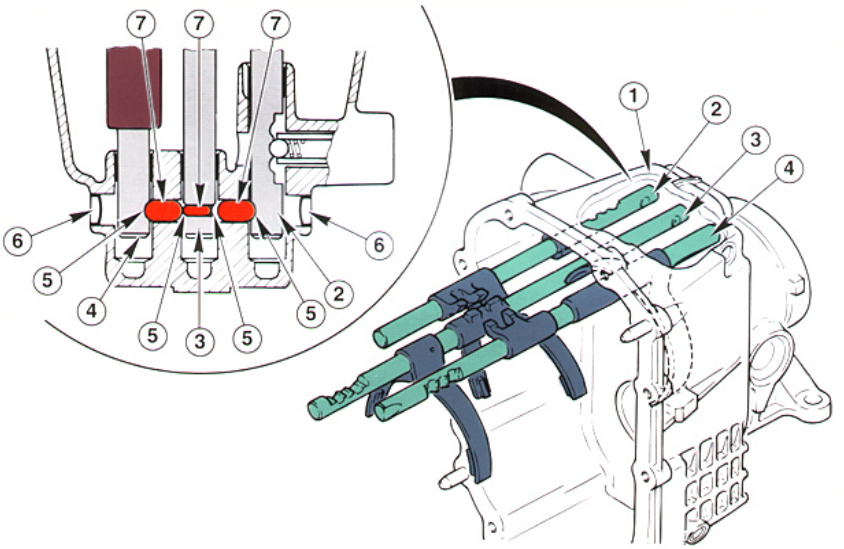

Plunger type interlock[1]

Sliding Plunger Interlock When three rails are used to select the gears, plungers or locking pins can be used. These lock the two remaining rails when one has moved. In the neutral position, each of the rails is free to move. When one rail (rod or shaft) has moved, the pins move into the locking notch, preventing the other rails from moving.

Summary Gear selection must be a simple process for the driver. In order to facilitate changing, a number of mechanical components are needed. The external shift mechanism must transfer movement to the internal components. The internal mechanism must only allow selection of one gear at a time by use of an interlock. A detent system helps to hold the selected gear in place.

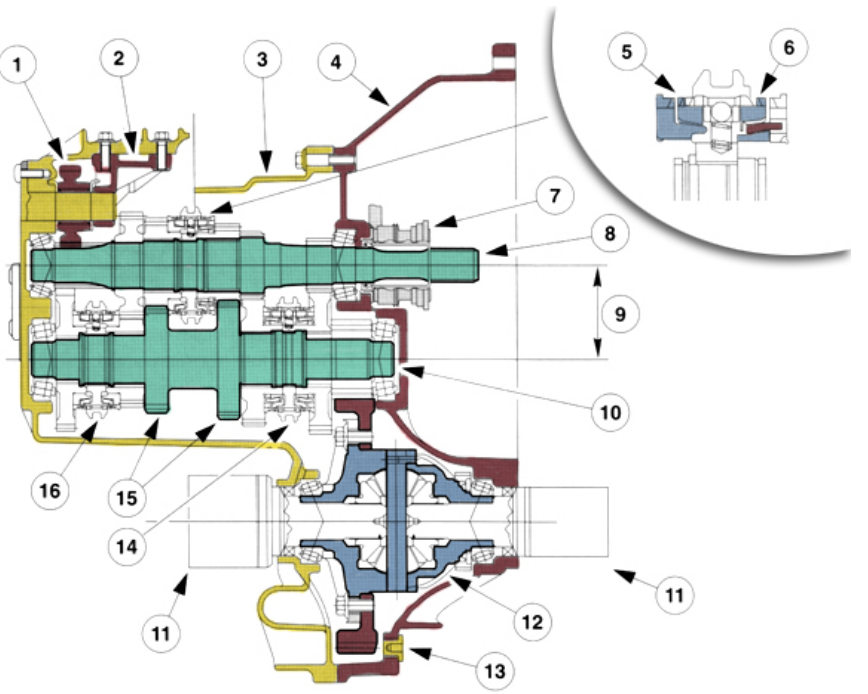

Design features of a transaxle[1]

State the advantage of a cable shift mechanism.

Read the previous section again and note down some key bullet points here:

-
-
-
-
-

Synchromesh Mechanisms

Introduction A synchromesh mechanism is needed because the teeth of dog clutches clash if they meet at different speeds. Shown here is part of a synchronizer. The dog clutch and cone clutch are highlighted. A synchromesh system synchronizes the speed of two shafts before the dog clutches are meshed – hence the name.

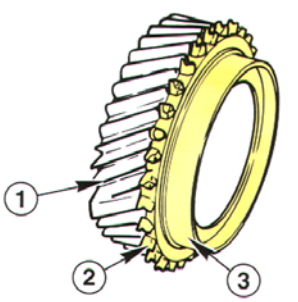

Part of a synchronizer[1]

Synchromesh The system works like a friction-type cone clutch. The collar is in two parts and contains an outer toothed ring, which is spring loaded to sit centrally on the synchromesh hub. When the outer ring, or synchronizer sleeve, is made to move by the action of the selector mechanism, the cone clutch is also moved because of the blocker bars.

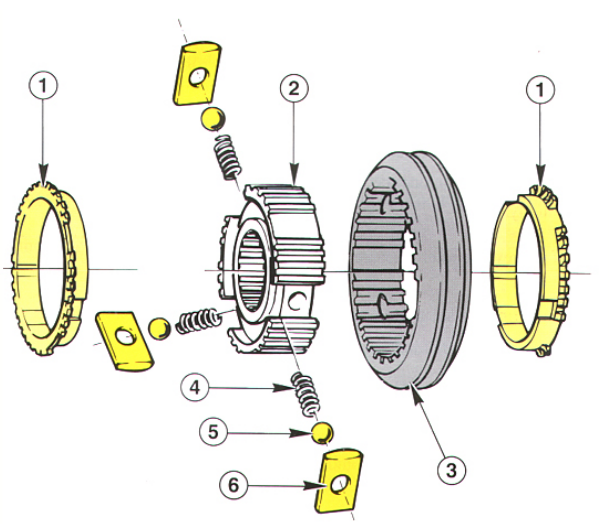

Synchronizer components[1]

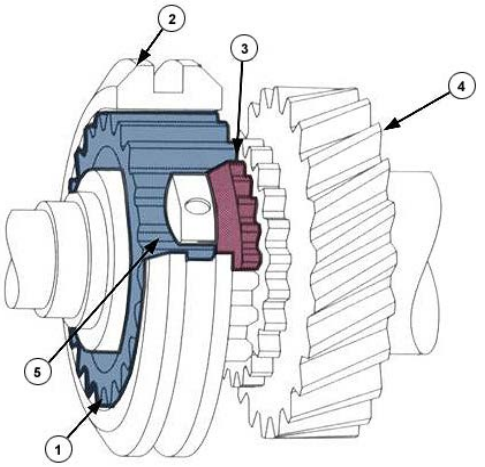

Synchronizer in neutral[1]

Neutral Position In the neutral position, the shift ring and blocker bars are centralized. There is no connection between the shift ring and the gear wheel. The gear wheel can turn freely on the shaft.

Synchronizing Position When the shift fork is moved by the driver, the shift ring is slid toward the gear wheel. In the process, the shift ring carries three blocker bars, which move the synchronizer ring axially and press it onto the friction surface (cone clutch) of the gear wheel. As long as there is a difference in speed, the shift ring cannot move any further. This is because the frictional force turns the synchronizer ring causing the tooth flanks to rest on the side of the synchronizer body.

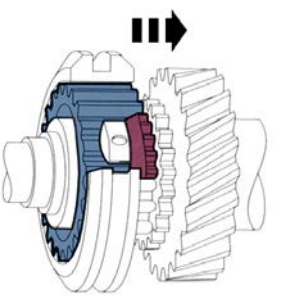

Synchronizer synchronizing[1]

Shift Position Once the shift ring and gear are turning at the same speed, circumferential force no longer acts on them. The force still acting on the shift ring turns it until it slides onto the teeth of the gear wheel. The gear wheel is now locked to its shaft.

Synchronizer Movement Once the shift ring and gear are turning at the same speed, circumferential force no longer acts on them. The force still acting on the shift ring turns it until it slides onto the teeth of the gear wheel. The gear wheel is now locked to its shaft.

Reverse Gear An extra shaft carries the reverse gear cog. Because reverse gear is selected with the car at a stop and low engine speed, some earlier gearboxes did not have a synchronizer on reverse. However, many modern boxes now include this feature.

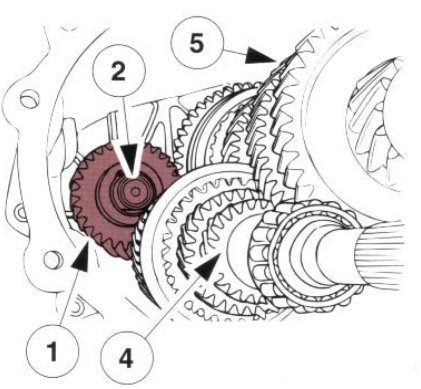

Reverse gear in position[1]

Summary For two rotating shafts to mesh using a dog clutch, they should ideally be rotating at the same speed. Early motorists had to be skilled in achieving this through a process known as double-declutching. However, all modern gearboxes make life much easier for us by the use of synchromesh systems!

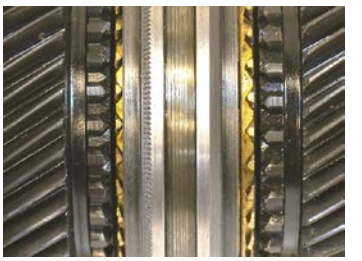
Synchromesh components

Explain why reverse gear may not have synchromesh.

Read the previous section again and note down some key bullet points here:

-
-
-
-
-

Front and Rear Wheel Drive Gearboxes

Introduction Rear-wheel drive cars usually have the engine mounted lengthways in the car. The gearbox is mounted on the back of the engine in the same direction. It passes the drive via a propshaft to the rear axle. Front-wheel drive cars usually have the engine mounted transversely (sideways). The gearbox fits on to the back of the engine but then straight gears pass the drive, via the final drive, to the driveshafts and wheels.

Lincoln LS Sports[2]

Front-Wheel Drive (FWD) Most front-wheel drive cars have a transmission system where the gearbox and final drive are combined. This is often described as a transaxle. The unit shown here is a five-speed box.

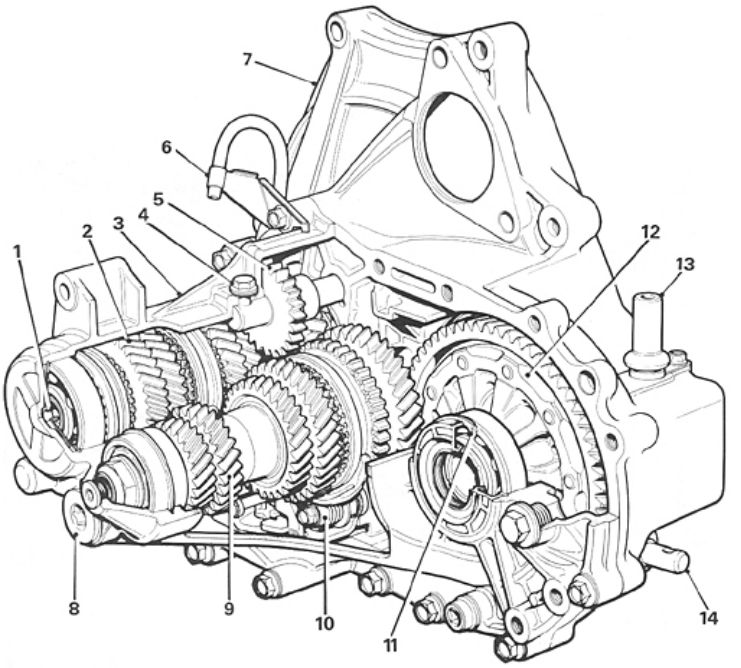

nternal transaxle features

Example FWD Gearbox The selector fork, synchronizer and the helical gears can be seen in this cutaway gearbox. The gears, as with all modern boxes, are in constant mesh. The correct lubricant is essential for these gearboxes. Damage will occur if the wrong type is used.

Cable change FWD gearbox (Ford)

FWD Gearbox Mountings Front-wheel drive transmission gearboxes are solid-mounted on the engine. They are secured to the vehicle body or chassis with rubber mountings. This reduces noise and vibration for the passengers.

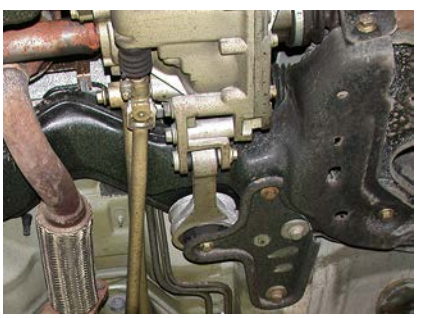

Rubber mountings reduce vibration

Speedometer Drive The drive for the speedometer is taken from the gearbox output shaft on most vehicles. This shaft rotates at a speed proportional to road speed. Some manufacturers still used speedometer cables but many now opt for speed sensors, which provide a signal for an electronic gauge.

Speed sensor and cable connection

Rear-Wheel Drive (RWD) Rear-wheel drive gearboxes do not usually contain final drive components. The exception of this may be on four-wheel drive vehicles. The gearbox casing attaches to a bell housing, which bolts to the engine and covers the clutch. Larger vehicles used larger gearboxes because of the extra strength required. The operating principles are the same for all types.

Volvo transverse engine 4WD[2]

Example RWD Gearbox General Motors use this box in the "Chevy Crew Cab.” The gearbox is made by ZF. It is a six-speed manual transmission with the shift lever acting directly. Gearboxes, where the shift lever acts via a linkage, are often described as indirect or remote operated.

RWD gearbox[2]

RWD Gearbox Mountings General Motors use this box in the "Chevy Crew Cab.” The gearbox is made by ZF. It is a six-speed manual transmission with the shift lever acting directly. Gearboxes, where the shift lever acts via a linkage, are often described as indirect or remote operated.

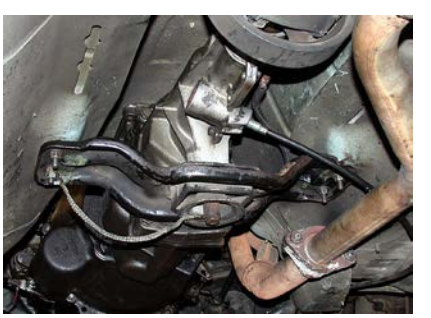

Rubber mountings reduce noise

Reverse Light Switch Most reverse light switches are simple on/off types. The switch body is fitted in the side of the gearbox casing. The toggle of the switch is moved by a selector shaft or other component when reverse gear is engaged.

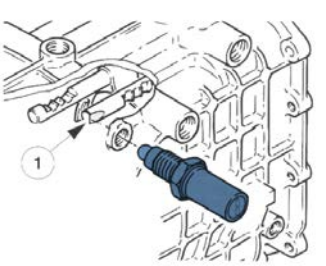

Switch positions…[1]

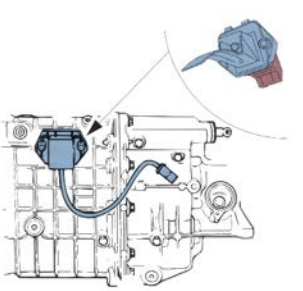

…Vary on different cars[1]

Transmission Gearbox This animation shows the operation of a front-wheel drive transmission system.

Summary The gearbox is the main transmission component. Transmission is a general term used to describe all of the components required to transmit power from the engine to the wheels. The requirement is to convert the power from the relatively high velocity and low torque of the engine crankshaft to the variable usually lower speed and higher torque needed at the wheels. FWD and RWD gearboxes may look different but their operating principles are the same. Automatic transmission is another story…

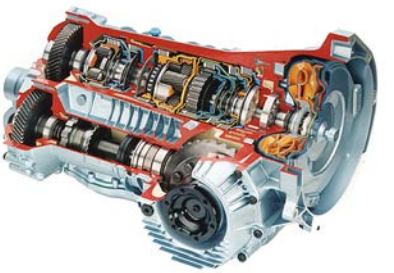

Automatic transmission gearbox

Describe how rear wheel drive gearboxes are mounted to the engine and vehicle.

Read the previous section again and note down some key bullet points here:

-
-
-
-
-

Rear Wheel Drive Bearings

Types of Bearing There are two main types of bearings used in rear-wheel hubs. These are ball bearings and roller (or tapered roller) bearings.

Ball bearing

Roller bearing

Rear-Wheel Bearings Axle shafts transmit drive from the differential to the rear-wheel hubs. An axle shaft has to withstand:

Torsional stress due to driving and braking forces

Shear and bending stress due to the weight of the vehicle

Tensile and compressive stress due to turning forces

A number of bearing layouts are used – depending on application – to handle these stresses.

Rough ground makes the stress on axles shafts even greater

Semi Floating Shown here is a typical axle mounting used on many rear-wheel drive cars. A single bearing is used, which is mounted in the axle casing. With this design, the axle shaft has to withstand all of the operating forces. The shaft is therefore strengthened and designed to do this. An oil seal is incorporated because oil from the final drive can work its way along the shaft. The seal prevents the brakes from being contaminated.

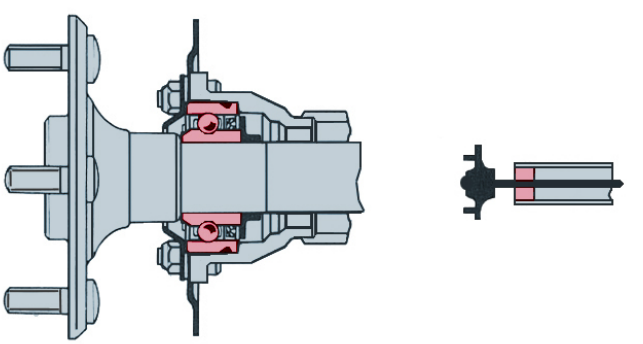

Wheel bearing – Semi floating

Three-Quarter Floating The three-quarter floating bearing shown here reduces the main shear stresses on the axle shaft, but the other stresses remain. The bearing is mounted on the outside of the axle tube. An oil seal is included to prevent the brake linings from being contaminated.

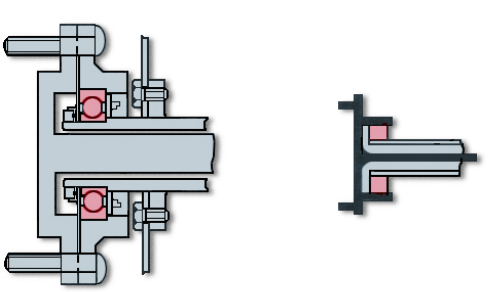

Wheel bearing – Three Quarter floating

Fully Floating Fully floating systems are generally used on heavy, or off-road vehicles. This is because the stresses on these applications are greater. Two widely spaced bearings are used, which take all of the loads, other than torque, off of the axle shaft. Bolts or studs are used to connect the shaft to the wheel hub. When these are removed, the shaft can be taken out without jacking up the vehicle.

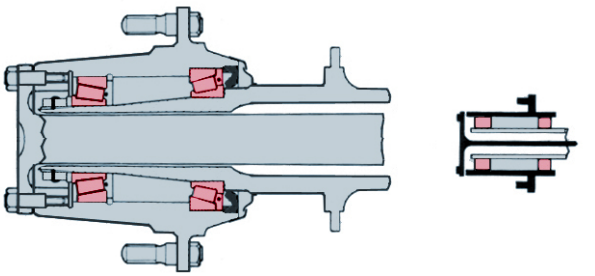

Wheel bearing – Fully floating

Front-Wheel Bearings Front hubs on rear-wheel drive cars consist of two bearings. These are either ball or tapered roller types. The roller types are generally used on earlier vehicles. They have to be adjusted by tightening the hub nut and then backing it off by about half a turn. The more modern hub bearings, known as contact-type ball races, do not need adjusting. This is because the hub nut tightens against a rigid spacer. This nut must always be set at a torque specified by the manufacturer.

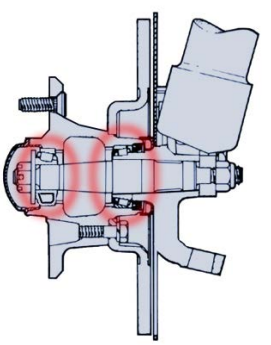

Front hub with tapered roller bearings

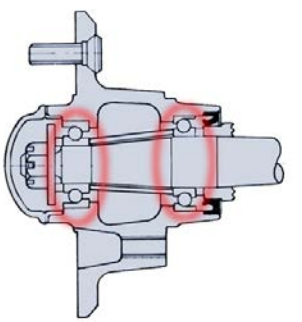

Front hub with ball bearings

Summary The most common systems for rear-wheel drive cars are semi-floating rear bearings at the rear, and twin ball bearings at the front. The front bearings are designed to withstand side forces as well as vertical loads.

Rear hub

Front hub

State the two main types of bearing used in rear wheel hubs.

Read the previous section again and note down some key bullet points here:

-
-
-
-
-

Front Wheel Drive Bearings

Introduction Wheel bearings must allow smooth rotation of the wheels but also be able to withstand high stresses such as those generated when turning. Front-wheel drive arrangements must also allow the drive to be transmitted via the driveshafts.

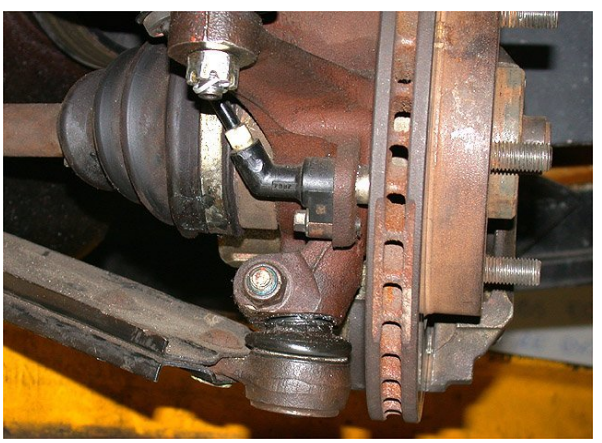

Driveshaft and front hub

Front Bearings The front hub works as an attachment for the suspension and steering as well as for supporting the bearings. It supports the weight of the vehicle at the front, when still or moving. Ball or roller bearings are used for most vehicles with specially shaped tracks. This is so the bearings can withstand side loads when turning. The bearings support the driveshaft as well as the hub.

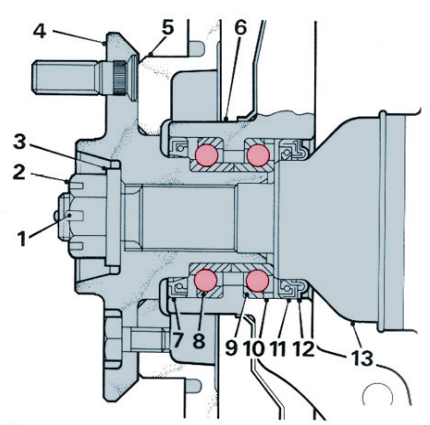

Front hub and bearings

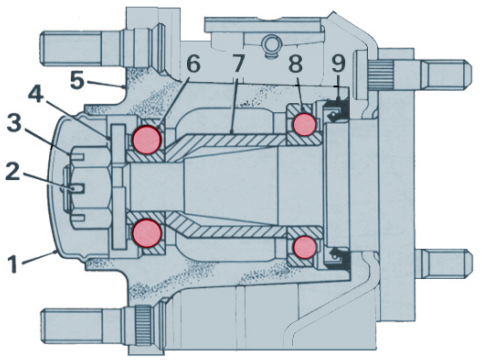

Rear hub and bearings

Rear Bearings The stub axle, which is solid-mounted to the suspension arm, fits in the center of two bearings. The axle supports the weight of the vehicle at the rear, when still or moving. Ball bearings are used for most vehicles with specially shaped tracks for the balls. This is so the bearings can stand side loads when turning. A spacer is used to ensure the correct distance between, and pressure on, the two bearings.

Summary The hub and bearing arrangement on the front of a front-wheel drive car must bear weight, withstand driving forces and support the driveshaft. The rear hub and bearings must support the vehicle and withstand side forces.

Rear hub

Front hub

Describe the function of front wheel hub.

Read the previous section again and note down some key bullet points here:

-
-
-
-
-

Propshafts

Introduction Propshafts, with universal joints, are used on rear- or four-wheel drive vehicles. They transmit drive from the gearbox output to the final drive in the rear axle. Drive then continues through the final drive and differential via two half shafts to each rear wheel.

Propshaft

Main Shaft A hollow steel tube is used for the main shaft. This is lightweight, but will still transfer considerable turning forces. It will also resist bending forces.

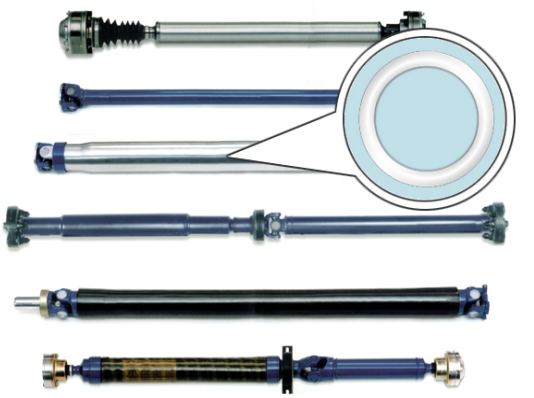

Section of a propshaft

Universal Joints (UJs) Universal joints allow for the movement of the rear axle with the suspension, while the gearbox remains fixed. Two joints are used on most systems and must always be aligned correctly.

Details of a UJ

Variable Velocity Because of the angle through which the drive is turned, a variation in speed results. This is caused because two arms of the universal joint rotate in one plane and two in another. The cross of the universal joint, therefore, has to change position twice on each revolution. However, this problem can be overcome by making sure the two universal joints are aligned correctly.

Universal Joint Alignment If the two universal joints on a propshaft are aligned correctly, the variation in speed caused by the first can be canceled out by the second. However, the angles through which the shaft works must be equal. The main body of the propshaft will run with variable velocity but the output drive will be constant.

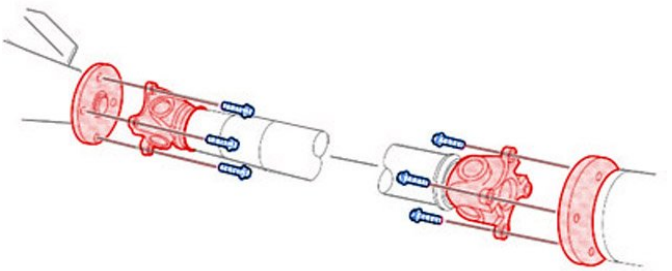

These joints are aligned correctly[1]

Universal Joint Bearings The simplest and most common type of universal joint consists of a four-point cross, which is sometimes called a spider. Four needle-type roller bearings are fitted, one on each arm of the cross. Two bearings are held in the driver yoke and two in the driven yoke.

Details of a universal joint

Universal Joint Developments Several types of universal joints have been used on vehicles. These developed from the simple “Hooke” type joint, to the later cross-type, often known as a Hardy Spicer. Rubber joints are also used on some vehicles.

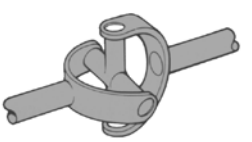

Hooke-type joint

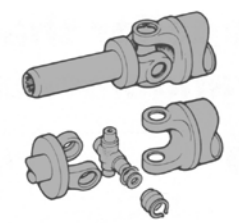

Cross-type joint

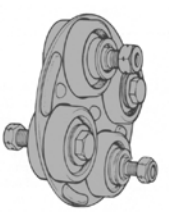

ayrub joint

L

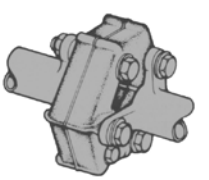

Donut joint

Rubber Couplings The donut coupling has the advantage of being flexible and absorbing torsional shocks. It also will tend to reduce vibrations caused by other joints. Its other main advantage is that it allows some axial (back and forth) movement.

Donut coupling

Suspension Movement As the suspension moves up and down, the length of the driveline changes slightly. As the rear wheels hit a bump, the axle moves upward. This tends to shorten the driveline. The splined sliding joint allows for this movement.

Sliding Joint A sliding joint allows for axial movement. However, it will also transfer the rotational drive. Internal splines are used on the propshaft so that the external surface is smooth. This allows an oil seal to be fitted into the gearbox output casing.

A splined joint connects to the gearbox

Center Bearings When long propshafts are used, there is a danger of vibration because the weight of the propshaft can cause it to sag slightly and therefore 'whip' (like a jumping rope) as it rotates. Most center bearings are standard ball bearings mounted in rubber.

This bearing prevents propshaft whip

Summary Propshafts are used on rear- or four-wheel drive vehicles. They transmit drive from the gearbox output to the rear axle. Most propshafts contain two universal joints. A single joint produces rotational velocity variations, but this can be canceled out if the second joint is aligned correctly. Center bearings are used to prevent vibration due to propshaft whip.

A propshaft transfers drive from the gearbox to the rear axle[2]

State the purpose of the splined joint on a propshaft.

Read the previous section again and note down some key bullet points here:

-
-
-
-
-

Driveshafts

Introduction Driveshafts with constant-velocity joints transmit drive from the output of the final drive and differential to each front wheel. They must also allow for suspension and steering movements.

Constant Velocity (CV) Joint A constant-velocity joint is a universal joint, however, it is constructed so that the output rotational speed is the same as the input speed. The speed rotation remains constant even as the suspension and steering move the joint.

Outer CV joint

Inner and Outer Joints The inner and outer joints have to perform different tasks. The inner joint has to move in and out to take up the change in length as the suspension moves. The outer joint has to allow suspension and steering movement up to about 45 degrees. A solid steel shaft transmits the drive.

Inner CV joint

Constant-Velocity Joint Operation When a normal universal joint operates, the operating angle of the cross changes. This is what causes the speed variations. A constant-velocity joint spider (or cross) operates in one plane because the balls or rollers are free to move in slots. The cross bisects the driving and driven planes.

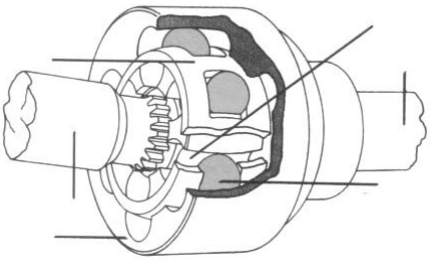

Gaiter or Boot The rubber boot or gaiter is to keep out the dirt and water and to keep in the lubricant. Usually a graphite or molybdenum grease is used, but check the manufacturer's specifications to be sure.

CV Joint Variations There are a number of types of constant-velocity joints. The most common is the Rzeppa (pronounced reh-ZEP-ah). The inner joint must allow for axial movement due to changes in length as the suspension moves.

Rzeppa Joint The Rzeppa joint is one of the most common. It has six steel balls held in a cage between an inner and outer race inside the joint housing. Each ball rides in its own track on the inner and outer races. The tracks are manufactured into an arch shape so that the balls stay in the midpoint at all times, ensuring that the angle of the drive is bisected. This joint is used on the outer end of a driveshaft. It will handle steering angles of up to 45 degrees.

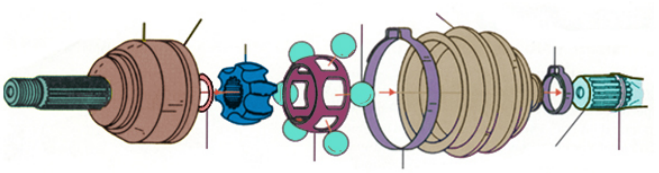

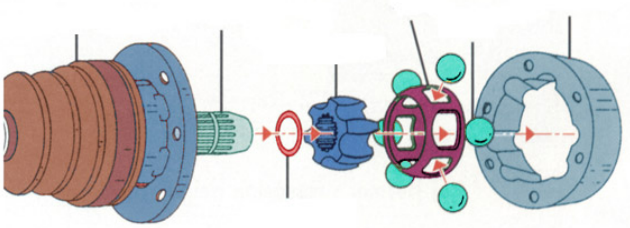

Cross-Groove Joint The Rzeppa joint is one of the most common. It has six steel balls held in a cage between an inner and outer race inside the joint housing. Each ball rides in its own track on the inner and outer races. The tracks are manufactured into an arch shape so that the balls stay in the midpoint at all times, ensuring that the angle of the drive is bisected. This joint is used on the outer end of a driveshaft. It will handle steering angles of up to 45 degrees.

Double-Offset Joint The double-offset joint is a further variation of the Rzeppa joint. The main difference is that the outer race has long straight tracks. This allows a plunge (axial movement) of up to 55 mm (2.1 inches) and a steering angle of up to 24 degrees.

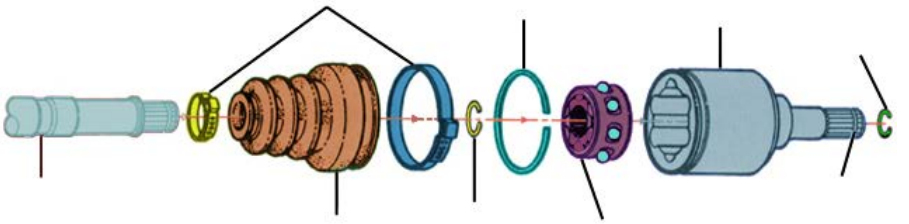

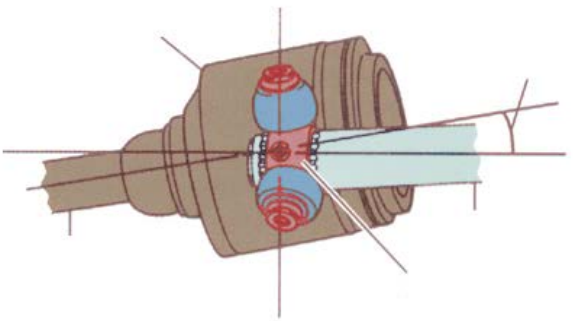

Tripod Joint The tripod joint is different from other constant-velocity joints. A component called a spider splits the drive angle. The arms of the spider give it the tripod name. Each arm of the spider has needle roller bearings and a roller ball. The roller balls work in grooves in the housing. This joint is suitable for inner or outer positions.

Summary Driveshafts with constant-velocity joints are used on front-wheel drive vehicles. They transmit drive from the differential to each front wheel. They must also allow for suspension and steering movements. Inner joints must 'plunge' to allow for changes in length of the shaft. Several types of constant-velocity joints are used. All types work on the principle of bisecting the drive angle to produce a constant-velocity output.

Explain the purpose of a plunge type CV joint.

Read the previous section again and note down some key bullet points here:

-
-
-
-

Differential Operation

Introduction The differential is a set of gears that divides the torque evenly between the two drive wheels. The differential allows one wheel to rotate faster than the other. As a car goes around a corner, the outside driven wheel travels further than the inside one. The outside wheel must therefore rotate faster than the inside one to cover the greater distance in the same time.

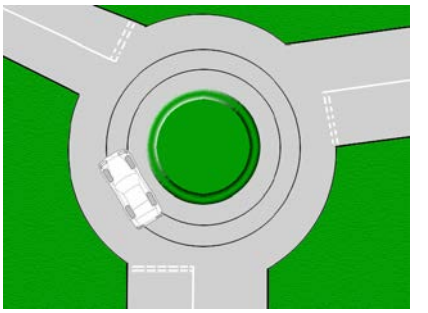

The outer wheels travel a greater distance

Main Components The differential consists of sets of bevel gears and pinions within a cage, attached to the large final drive gear. The bevel gears can be described as sun and planet gears. The sun gears provide the drive to the wheels via halfshafts or driveshafts. The planet gears either rotate with the sun gears or rotate around them, depending on whether the car is cornering or not.

Final Drive Gears The small pinion brings the drive from the gearbox to the larger final drive gear. A fixed gear reduction is produced by the crown wheel and pinion. On rear wheel drive cars, bevel gears are used to turn the drive through ninety degrees.

Differential Casing and Bearings The bearings support the differential casing, which is bolted to the final drive gear. The casing transmits the drive from the final drive gear to the planet gear pinion shaft.

Sun and Planet Pinions The planet gears are pushed around by their shaft. The sun gear pinions, which are splined to the drive shafts, take their drive from the planet gears. The sun gears always rotate at the same speed as the road wheels.

Planet Shaft The planet shaft is secured in the differential casing so that it pushes the planet gears. If the sun gears, which are attached to the road wheels via the driveshafts, are moving at the same speed, the planet gears do not spin on their shaft. However, when the vehicle is cornering, the sun gears need to move at different speeds. In this case, the planet gears spin on the shaft to make up for the different wheel speeds.

Traveling In a Straight Line When the vehicle is traveling in a straight line, the bevel pinions (planet gears) turn with the sun gears, but do not rotate on their shaft. This occurs because the two sun gears attached to the driveshafts are revolving at the same speed.

Cornering When the vehicle is cornering, the bevel pinions (planet gears) roll around the sun gears, and rotate on their shaft. This rotation is what allows the outer wheel to turn faster than the inner.

Torque Equalizer A standard differential can be described as a torque equalizer. This is because the same torque is provided to each wheel, even if they are revolving at different speeds. At greater speeds, more power is applied to the wheel, so the torque remains the same.

Differential

Extreme Example One further way to understand the differential action is to consider the extreme situation. This is when the corner is so sharp, the inner wheel does not move at all! Now of course this is impossible, but it can be simulated by jacking up one wheel of the car. All the drive is transferred to the free wheel. The planets roll around the stationary sun wheel but drive the free wheel because they are rotating on their shaft.

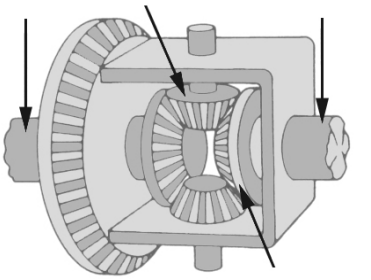

All the drive is transferred to the free wheel

Stuck In The Mud! The example, given on the last screen, highlights the one problem with a differential. If one of the driven wheels is stuck in the mud, all the drive is transferred to that wheel and it normally spins. Of course, in this case, drive to the wheel on the hard ground would be more useful. The solution to this problem is the limited slip differential.

Summary As a car goes around a bend, the outside driven wheel travels further than the inside one. The outside wheel must therefore rotate faster to cover the greater distance in the same time. The differential allows this difference in speed.

State the purpose of a differential.

Describe what happens to the planet gears when a vehicle is driven with one wheel spinning in mud.

Read the previous section again and note down some key bullet points here:

-
-
-
-

Final Drive

Introduction Because of the speed at which an engine runs, and in order to produce enough torque at the road wheels, a fixed gear reduction is required. This is known as the final drive. It consists of just two gears. On front wheel drive vehicles, the final drive is fitted after the output of the gearbox. . On rear wheel drive vehicles, it is fitted in the rear axle after the propshaft.

Front wheel final drive

Rear wheel final drive

Gear Ratio The ratio is normally between 2:1 and 4:1. In other words, at 4:1, when the gearbox output is turning at 4000 rev/min, the wheels will turn at 1000 rev/min.

Rear Wheel Drive The final drive gears turn the drive through ninety degrees on rear wheel drive vehicles. Four-wheel drive vehicles will also have this arrangement as part of the rear axle.

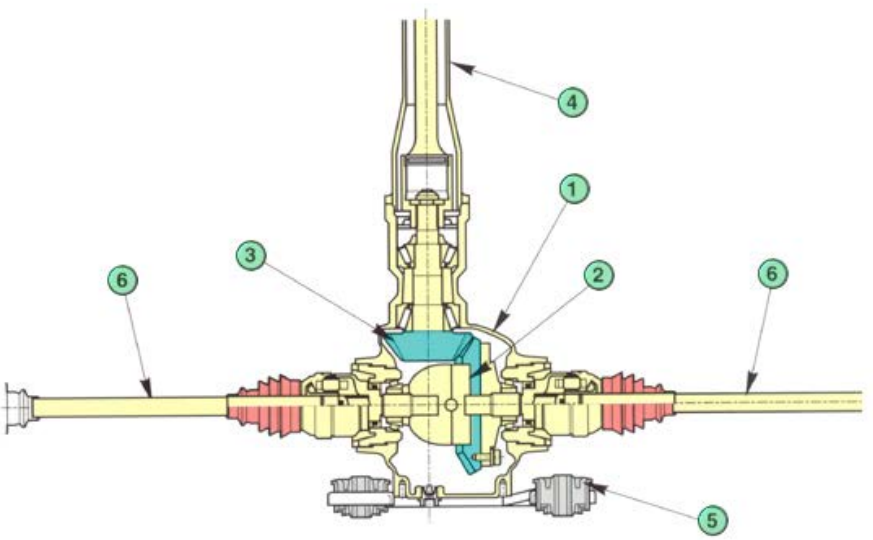

Rear axle final drive gears[1]

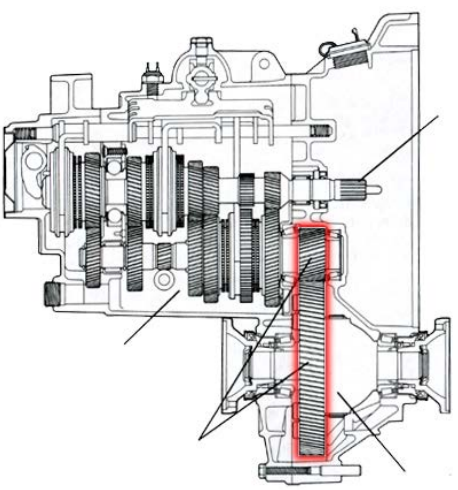
Transaxle final drive gears[1]

Front Wheel Drive Most cars now have a transverse engine, which drives the front wheels. The power of the engine, therefore, does not have to be carried through a right angle to the drive wheels. The final drive contains ordinary reducing gears rather than bevel gears.

Bevel Gears The crown wheel and pinion are types of bevel gears because they mesh at right angles to each other. They carry power through a right angle to the drive wheels. The crown wheel is driven by the pinion, which receives power from the propeller shaft.

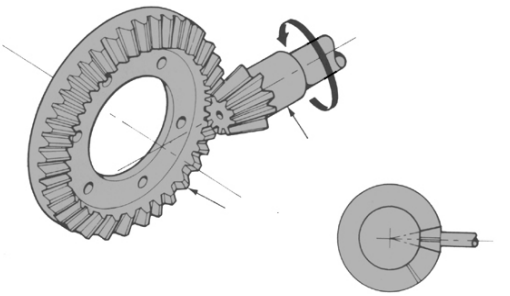

Bevel gears change ratio and drive angle

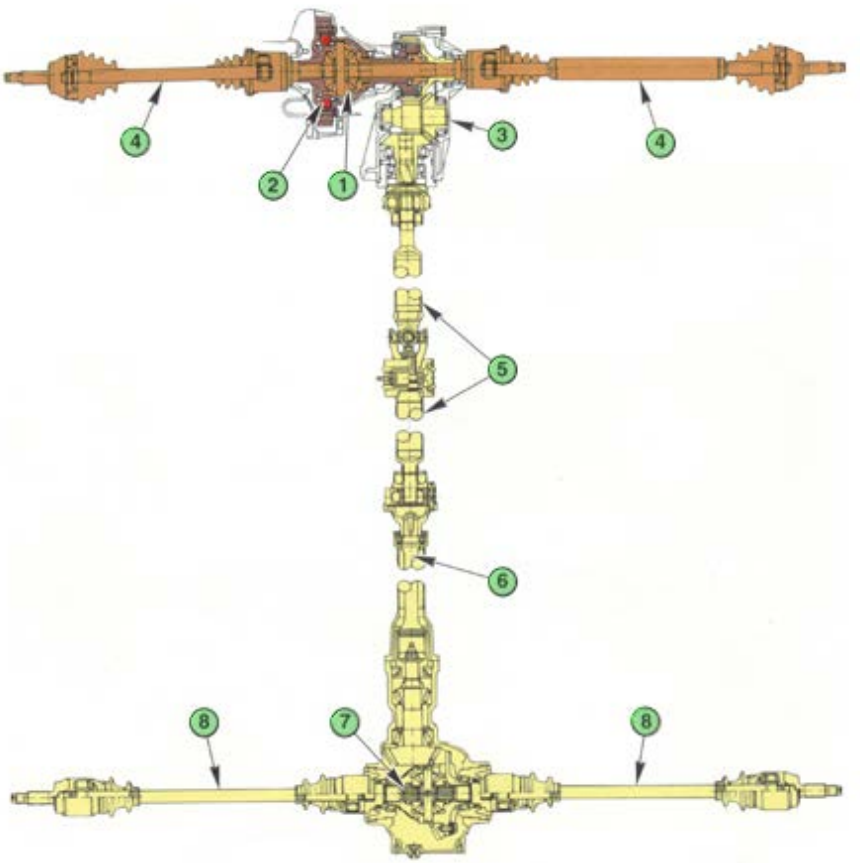

WD final drive layout[1]

Reduced Speed and Increased Torque Final drive gears reduce the speed from the propeller shaft and increase the torque. The reduction in the final drive multiplies any reduction that has already taken place in the transmission.

4

Hypoid Gear The crown wheel gear, of a rear wheel drive system, is usually a hypoid type, which is named after the way the teeth are cut. This results in quiet operation and allows the pinion to be set lower than the crown wheel center. This saves space in the vehicle because a smaller transmission tunnel can be used.

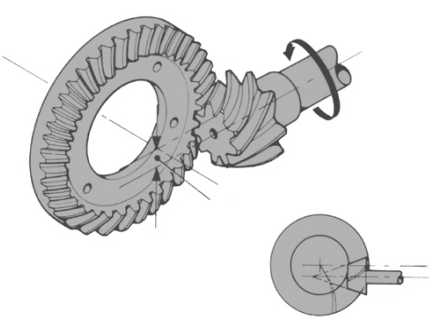

The design allows a lower propshaft to be used

Hypoid Gear Oil Because the teeth of hypoid gears cause 'extreme pressure' on the lubrication oil, a special type of oil is used. This oil may be described as 'Hypoid Gear Oil' or 'EP', which stands for extreme pressure. As usual, refer to manufacturers' recommendations when topping off or changing oil.

Lubrication is important

Rear Axle Because the teeth of hypoid gears cause 'extreme pressure' on the lubrication oil, a special type of oil is used. This oil may be described as 'Hypoid Gear Oil' or 'EP', which stands for extreme pressure. As usual, refer to manufacturers' recommendations when topping off or changing oil.

Front Axle The front wheel drive axle, where a transaxle system is used, always consists of the final drive and two driveshafts. The gearbox, final drive, and one driveshaft are shown here. The final drive gears provide the same reduction as those used on rear wheel drives, but do not need to turn the drive through ninety degrees.

Four Wheel Drive
The general layout of a four-wheel drive system is shown here. A representation of how torque is distributed is also shown. The variation in torque is achieved by differential action. This is examined in more detail later in this program.

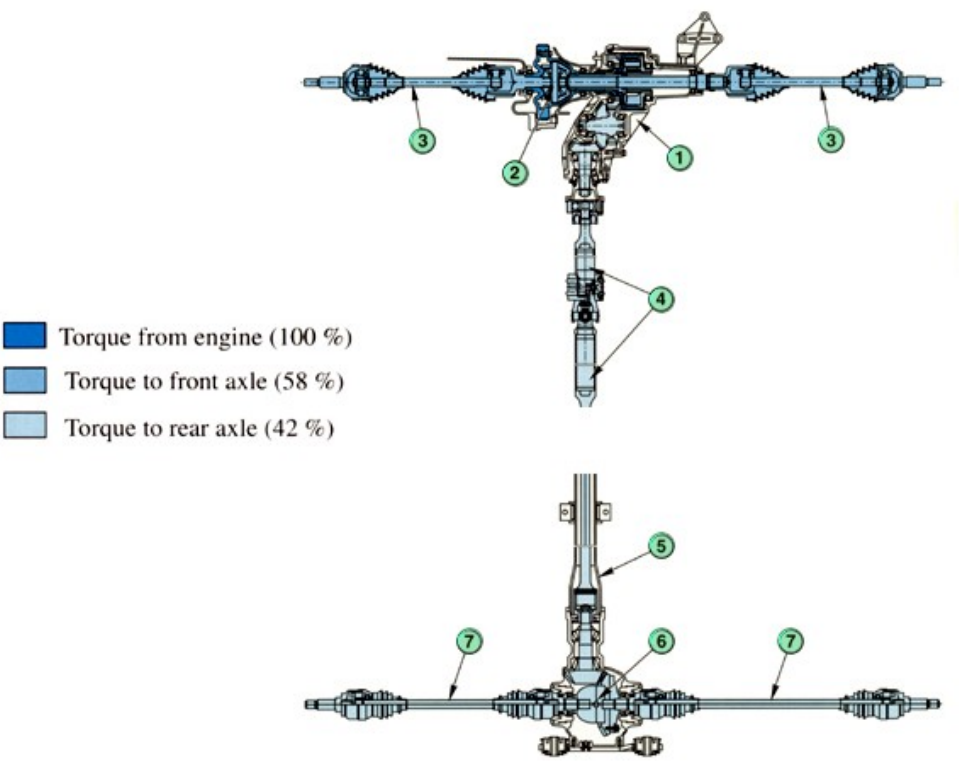

Torque distribution in a 4WD system[1]

Summary To produce enough torque at the road wheels, a fixed gear reduction is required. This is known as the final drive. It consists of just two gears. On rear wheel drive systems, the gears are beveled to turn the drive through ninety degrees. On front wheel drive systems, this is not necessary. The drive ratio is similar for front or rear wheel drive cars.

Is this the final drive?[2]

Describe the purpose of final drive gears.

Read the previous section again and note down some key bullet points here:

-
-
-
-
-

Limited Slip Differentials

Introduction Some higher performance vehicles use a limited slip differential (LSD). Clutch plates, or similar, are connected to the two output shafts and can control the amount of slip. This can be used to counteract the effect of one wheel losing traction when high power is applied.

High performance vehicles use LSDs[2]

Standard Differential A standard differential always applies the same amount of torque to each wheel. Two factors determine how much torque can be applied to a wheel. In dry conditions, when there is plenty of traction, the amount of torque applied to the wheels is limited by the engine and gearing. When the conditions are slippery, such as on ice, the torque is limited by the available grip.

This differential is sometimes described as an open type

Limited Slip Differential The solution to the problems of the normal differential is the limited slip differential (LSD). Limited slip differentials use various mechanisms to allow normal differential action when going around turns. However, when a wheel slips, they allow more torque to be transferred to the non-slipping wheel.

LSD in position[2]

The Clutch-Type LSD The clutch-type LSD is the most common. It is the same as a standard differential, except that it also has a spring pack and a multi-plate clutch. The spring pack pushes the sun gears against the clutch plates, which are attached to the cage. Both sun gears spin with the cage when both wheels are moving at the same speed, and the clutches have little or no effect. However, the clutch plates try to prevent either wheel from spinning faster than the other. The stiffness of the springs and the friction of the clutch plates determine how much torque it takes to make it slip.

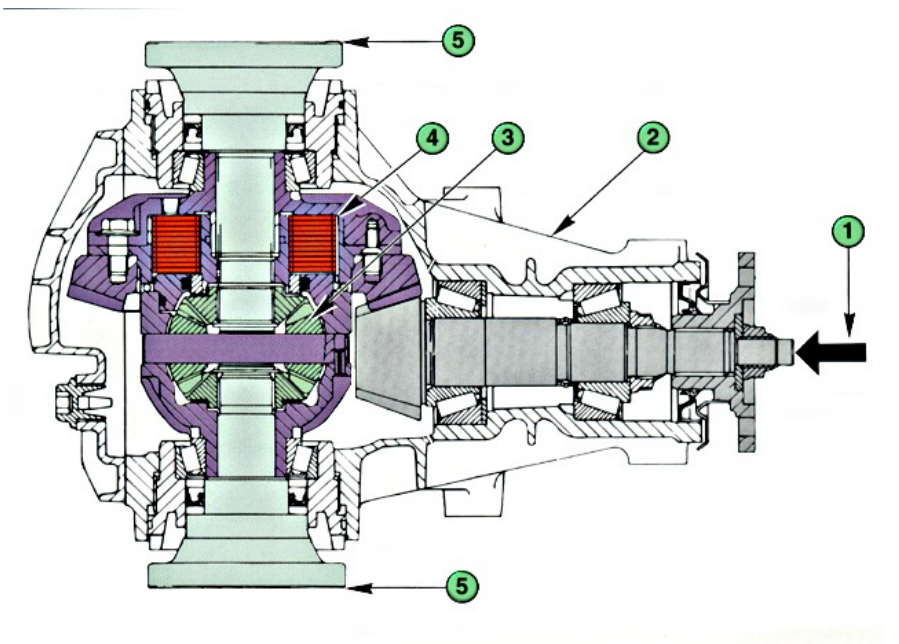

LSD using clutch plates[1]

Slippery Surface If one drive wheel is on a slippery surface and the other one has good traction, drive can be transmitted to this wheel. The torque supplied to the wheel not on the slippery surface, is equal to the amount of torque it takes to overpower the clutches. The result is that the car will move, but not with all the available power.

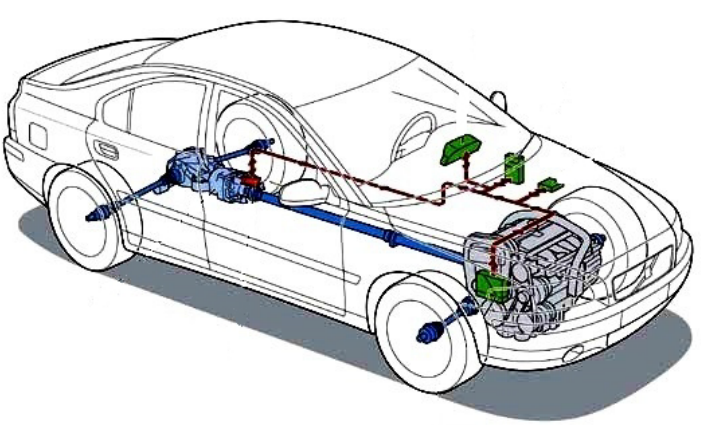

4

x4 layout using LSDs[2]

Viscous Coupling The viscous coupling is often found in all-wheel-drive vehicles. It is commonly used to link the back wheels to the front wheels so that when one set of wheels starts to slip, torque will be transferred to the other set. The viscous coupling has two sets of plates inside a sealed housing that is filled with a thick fluid. One set of plates is connected to each output shaft. Under normal conditions, both sets of plates and the viscous fluid spin at the same speed. However, when one set of wheels spins faster, there will be a difference in speed between the two sets of plates.

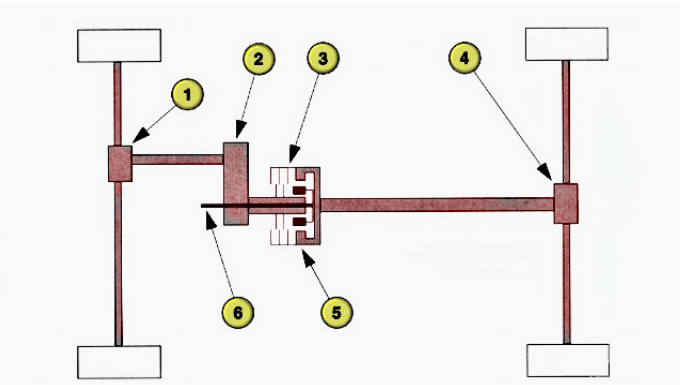

Viscous type LSD

Viscous Fluid The viscous fluid between the plates, tries to catch up with the faster disks, dragging the slower disks along. This transfers more torque to the slower wheels. When a vehicle is cornering, the difference in speed between the wheels is not as large as when one wheel is slipping. The faster the plates spin, relative to each other, the more torque the coupling transfers. This effect can be demonstrated by spinning an egg. Spin the egg and then stop it. Let go, and it will start to spin again as the viscous fluid inside is still spinning and drags the shell around with it.

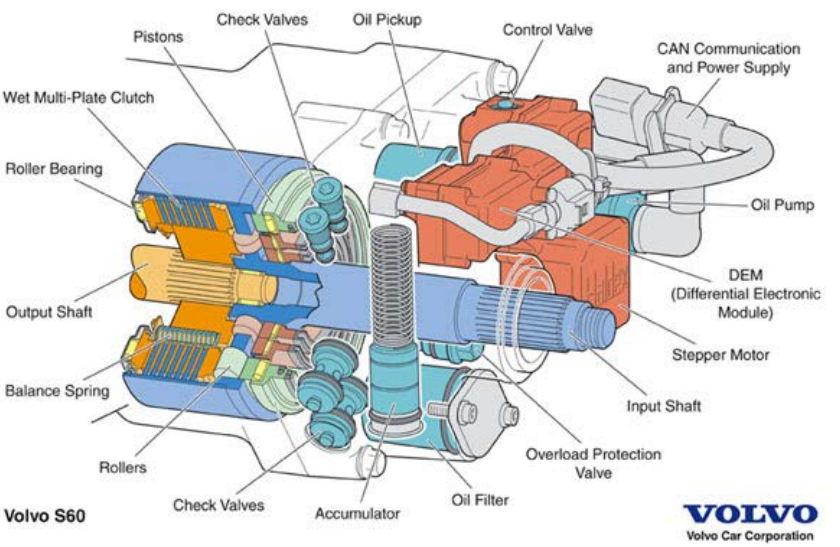

Electronically controlled coupling[2]

Electronic Control Conventional limited slip differentials cannot be designed for optimum performance because of the effect on the vehicle when cornering and on the steering. These issues prompted the development of electronic control. The slip limiting action is controlled by a multi-disc clutch as discussed previously. The pressure on the clutch plates is controlled by hydraulic pressure, which in turn is controlled by a solenoid valve under the influence of an ECU. If required it can fully lock the axle. Data is provided to the ECU from standard ABS type wheel sensors.

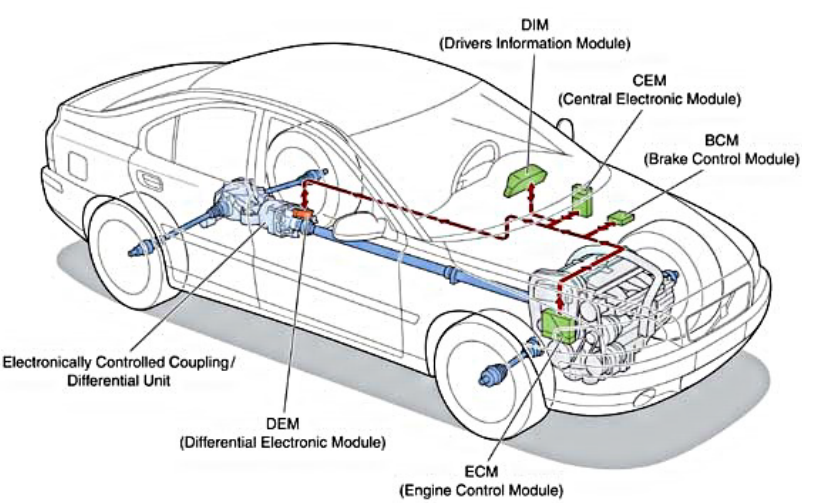

Electronic control of drive system[2]

Summary The two main types of limited slip differentials are the plate type and viscous coupling type. A speed difference between wheels or axles must overcome plate friction on the clutch type. The viscous type works because the friction between plates increases as the speed difference increases.

Rally cars use LSDs[2]

Describe the basic operation of a limited slip differential.

Read the previous section again and note down some key bullet points here:

-
-
-
-
-

Other Differentials and Units

Introduction Some differentials are provided with a facility that locks them. In other words, they stop being differentials! This is useful for some off road situations. Disconnect units are now also being used to improve overall performance of AWD systems.

Differential Locks Differential locks are used on many off-road type vehicles. A simple dog clutch or similar device prevents the differential action. This allows far better traction on slippery surfaces. An electric, hydraulic or pneumatic mechanism is used to lock the two output pinions together.

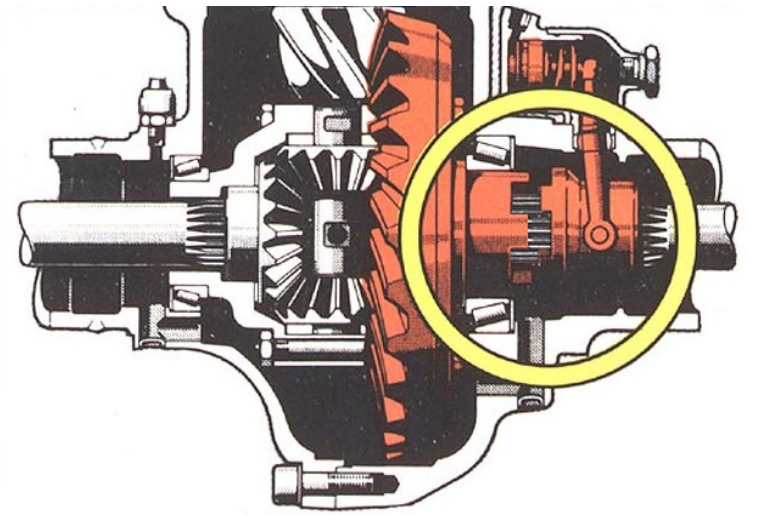

Locking mechanism

Diff Lock Control This mechanism is usually activated manually by switch, and, when activated, both wheels will spin at the same speed. If one wheel ends up off the ground, the other wheel will continue to spin at the same speed.

Diff lock warning light

4x4 Power Flow Many 4x4 vehicles use three differentials. One on each axle and one joining the two axles. For optimum handling, it is essential to control the torque distribution. Shown here is a typical system with the torque distribution and main components highlighted.

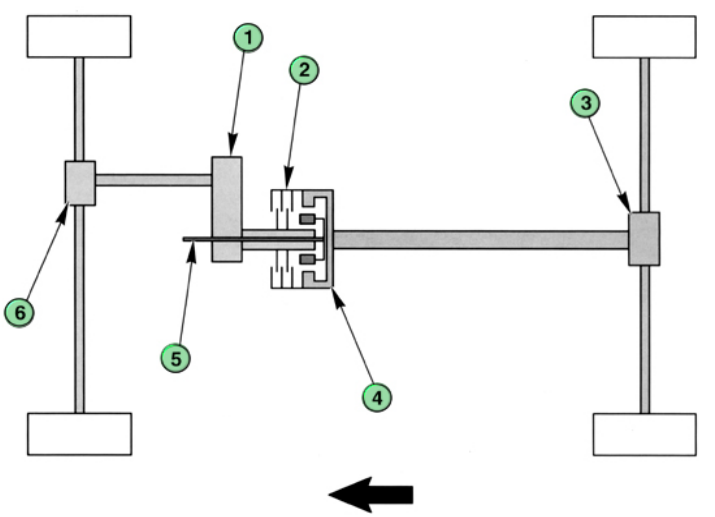

Power flow with a 4WD configuration[1]

Disconnect Unit – Purpose This type of unit provides ABS compatibility for AWD. It can provide AWD function in reverse by automatic actuation of a centrifugal locking mechanism. It is a simple, self-controlled system, requiring no external control. The disconnect unit (DU) is an automatically locking freewheel device. It utilizes a viscous transmission or similar system as a hang-on (also known as 'on-demand') driveline configuration.

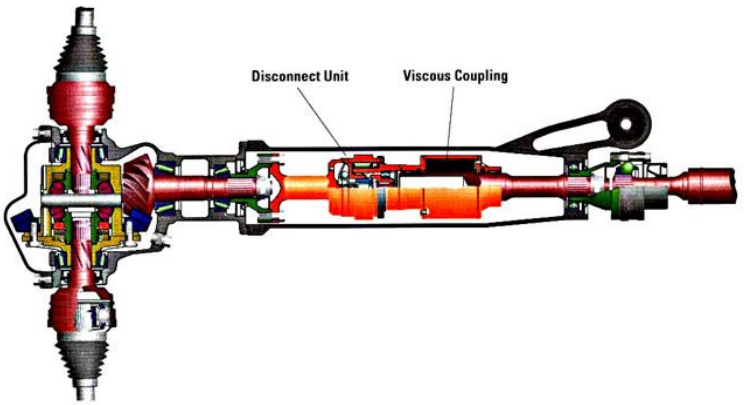

DU positioned in the transmission [ZF]

Disconnect Unit – Operation The unit transmits torque in the forward drive direction. However, in the overrun mode, when braking, the unit allows no torque transmission between the front and rear axles. This feature provides optimum vehicle braking stability. An integrated coupling bypasses the overrun mode by locking the unit at lower speeds. This provides AWD capability in reverse drive. When the predefined disengagement speed is exceeded, flyweights open the coupling and the overrun feature is restored.

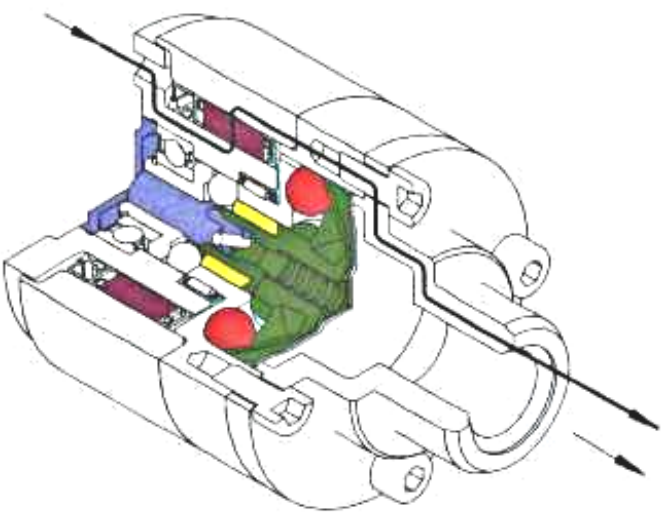

DU freewheel components [ZF]

Summary There are a number of new features under development relating to differentials. Locking units are often used on off -road vehicles. Disconnect units allow improved drive performance but without loss of vehicle control.

Off road vehicle in action[2]

Explain why a permanent four wheel drive system needs three differentials.

Read the previous section again and note down some key bullet points here:

-
-
-
-
-

Four-Wheel Drive Systems

Introduction Four-wheel drive (4-WD) systems can be described as part-time or full-time. Part-time means that the driver has the choice of selecting the drive. All 4-wheel drive systems must include some type of transfer gearbox.

Four-wheel drive may be essential for this car![2]

Four-Wheel Drive System Layout The main components of a four-wheel drive system are show here. Each axle must be fitted with a differential. A transfer box takes drive from the output of the normal gearbox and distributes it to the front and rear. The transfer box may also include gears to allow the selection of a low ratio. High ratio is a straight-through drive.

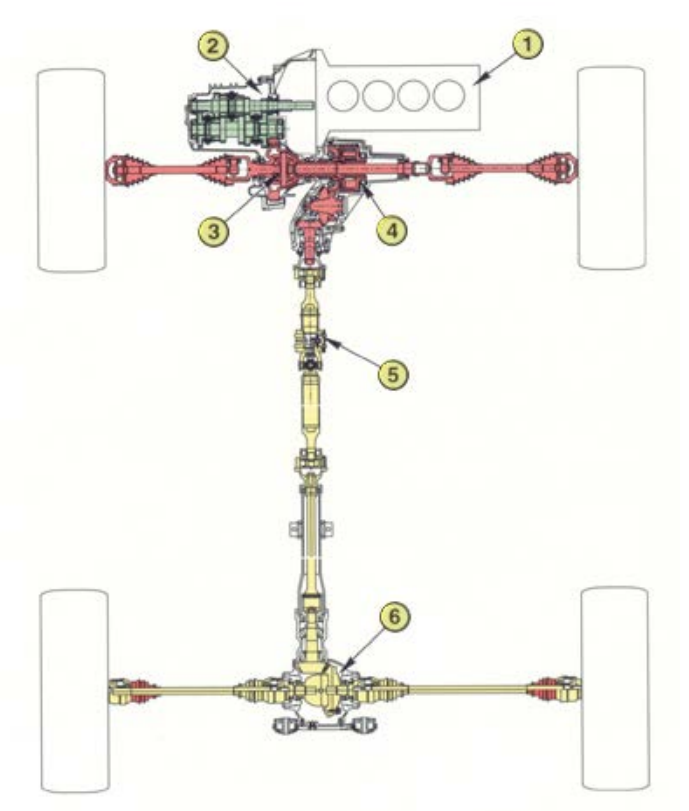

The main components of a four-wheel drive system[1]

Part-Time 4-Wheel Drive A 4-wheel drive system, when described as part-time, means that the driver selects 4-wheel drive only when the vehicle needs more traction. When the need no longer exists, the driver reverts to the normal 2-wheel drive. This keeps driveline friction, and therefore the wear rate, to a minimum.

Selection control

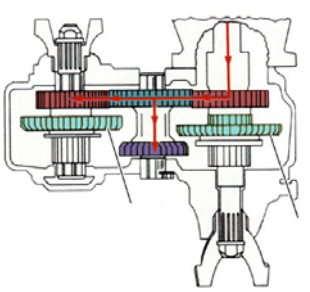

Transfer box - Neutral[1]

Full-Time 4-Wheel Drive A 4-WD system, when described as full-time, means that the drive is engaged all the time. The driver may still be able to select a low-range setting. To prevent 'wind up', which would occur when the front and rear axles rotate at different speeds, a center differential or viscous drive is used.

Four-wheel drive in action (part-time)

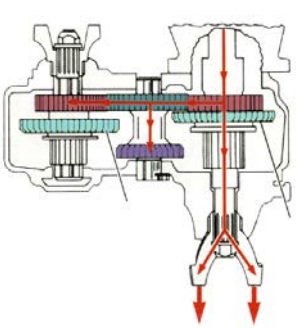

Transfer box - Two wheel drive high[1]

All-Wheel Drive (A-WD) An all-wheel drive system automatically transfers drive to the axle with better traction. It is designed for normal road use. A low-ratio option is not available. The system is described as part-time if the driver can select front-, or all-wheel drive. It is described as full-time if selection is not possible. The drive, on full-time systems, is passed to the rear via a viscous coupling. When the front wheels spin, the viscous coupling locks and transfers drive to the rear.

Volvo S60 AWD vehicle[2]

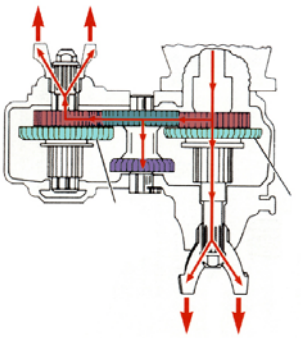
Transfer box - Four wheel drive high[1]

Transfer Box The transfer box of a part-time 4-WD system usually allows the driver to choose from four options: Neutral, 2-WD High, 4-WD High and 4-WD Low. A typical system will have the transfer box, attached to the normal rear-wheel drive gearbox, in place of the extension housing. A two-speed transfer box is shown here.

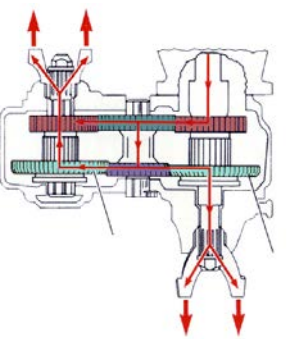
Transfer box - Four wheel drive low[1]

Center Differential A differential allows its two outputs to be driven at different speeds. This is normally important for the drive axle of a vehicle. When a vehicle is turning, the outer wheels travel faster than the inner wheels. On 4-WD systems, it is possible for, say, the front axle to rotate faster than the rear axle. This could produce driveline 'wind up' of the transmission. Center differentials are designed to allow for this. On modern vehicles, they often consist of planetary-type gears.

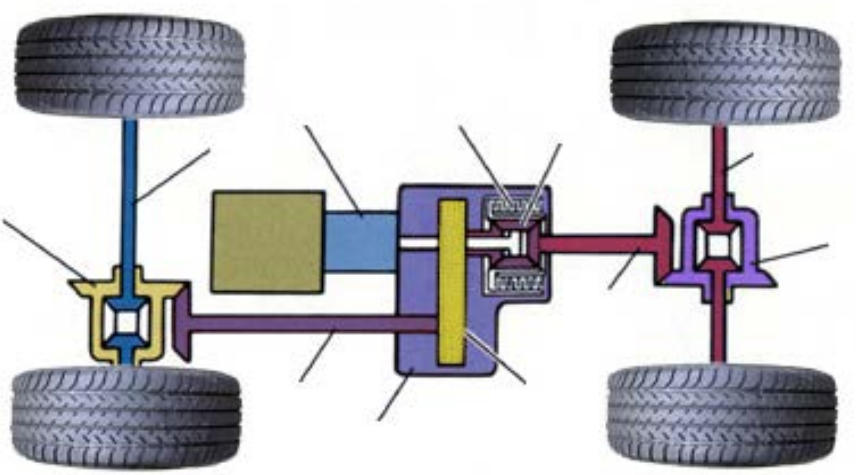
Differential fitted between front and rear axles

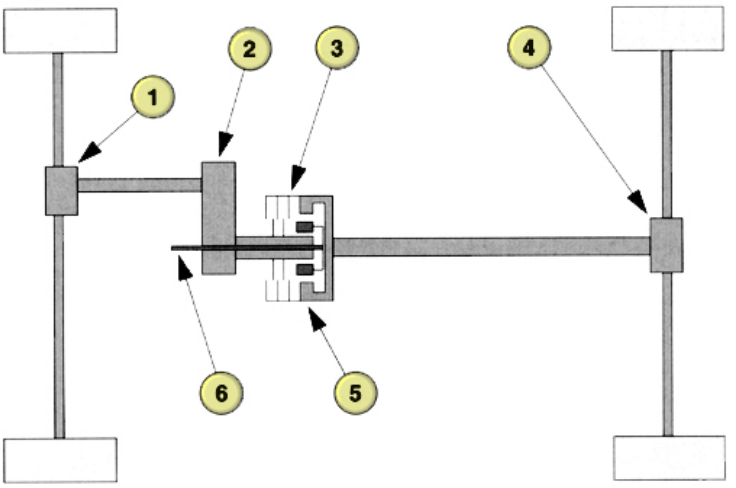

Torque is transmitted when axle speeds differ[1]

Viscous Coupling A viscous coupling is designed to transmit drive when the axle speeds differ. This occurs because the difference in speed of the two axles increases the friction in the coupling. This results in greater torque transmission, which in turn reduces the speed difference. As the speed difference reduces, less torque is transmitted. In this way, the torque is shared proportionally between the two axles.

Chain Drive A 'silent' drive chain is used on many newer vehicles to pass the drive to the auxiliary output shaft. The chain takes up less space than gears. It is designed to last the life of the vehicle and adjustment is not normally possible. The steel chain is similar in design to timing gear chains, only it is wider and stronger.

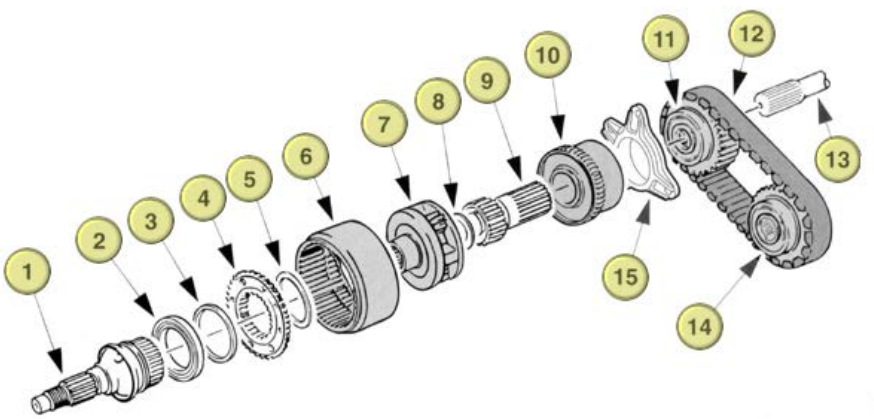

Transfer box using planetary gears and a drive chain[1]

Summary Four-wheel drive systems use a combination of propshafts and driveshafts together with viscous couplings and transfer boxes. A number of variations are possible. These are described as full-time or part-time.

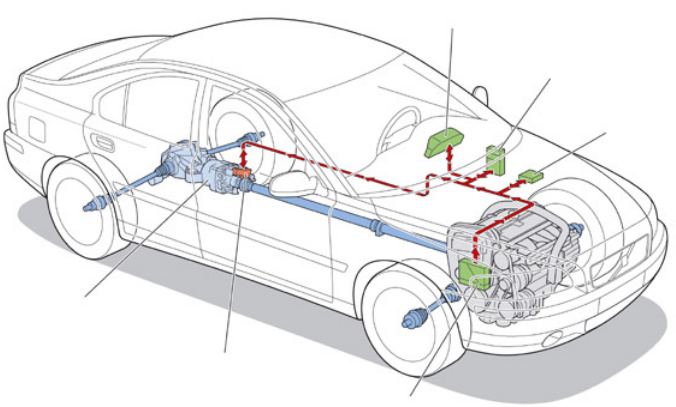

Volvo 4wd layout[2]

State the FOUR usual settings/options of a transfer box selectable by the driver.

Traction Control

Introduction The 'steerability' of a vehicle is lost if the wheels spin during severe acceleration. Electronic traction control has been developed as a supplement to antilock brake systems (ABS). This control system prevents the wheels from spinning when moving off, or when accelerating sharply while on the move. In this way, an individual wheel, which is spinning, is braked in a controlled manner. If both or all of the wheels are spinning, the drive torque is reduced by means of an engine control function. Traction control has become known as ASR or TCR.

Antilock Brake System (ABS) Traction control is normally available in combination with ABS. This is because many of the components required are the same for each. Shown here is a block diagram of a traction control system. Note the links with ABS and the engine control system.

Reasons for Traction Control
Traction control will intervene to achieve the following:

Driving stability

Reduction of yawing moment reactions

Optimum propulsion at all speeds

Reduced driver workload.

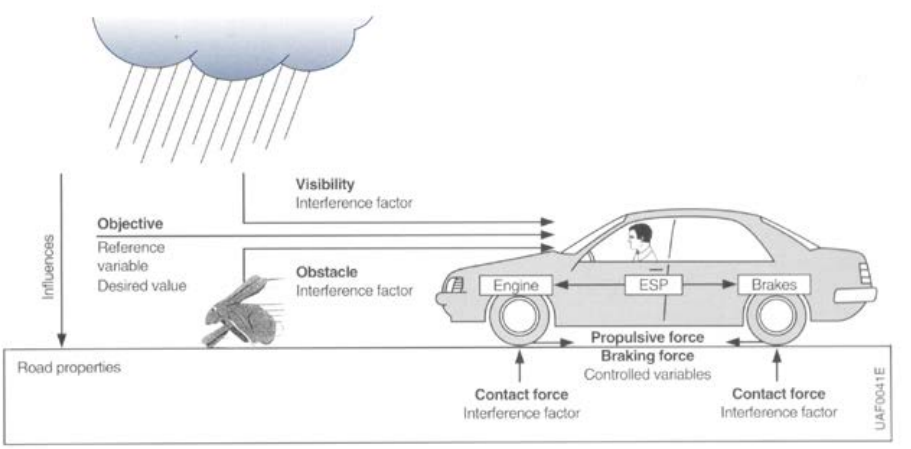

'Conditions' acting on the driver and car[3]

Intervention An automatic control system can intervene more quickly and precisely than the driver of the vehicle. This allows stability to be maintained at a time when the driver might not be able to cope with the situation.

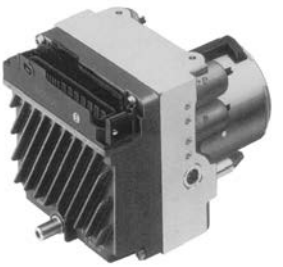

ABS and traction control modulator and ECU[4]

Control Methods Control of tractive force can be achieved by a number of methods:

Throttle control

Ignition control

Braking effect.

Each of these methods is examined further over the next three screens.

Throttle

Brakes

Ignition

System under test

Throttle Control 💻 Throttle control can be through an actuator, which simply moves the throttle cable. If the vehicle employs a 'drive by wire' accelerator, then control will be in conjunction with the engine management system. This throttle control will be independent of the driver's pedal position. This method alone works, but it is relatively slow to control engine torque.

Ignition Control 💻 Throttle control can be through an actuator, which simply moves the throttle cable. If the vehicle employs a 'drive by wire' accelerator, then control will be in conjunction with the engine management system. This throttle control will be independent of the driver's pedal position. This method alone works, but it is relatively slow to control engine torque.

Braking Effect 💻 If the spinning wheel is restricted by brake pressure, the reduction in torque at the effected wheel is very fast. Maximum brake pressure is not used in order to ensure that passenger comfort is maintained.

Traction Control System A sensor determines the position of the accelerator and, taking into account other variables such as engine temperature and speed, the throttle is set at the optimum position by a drive motor. When accelerating, the increase in engine torque leads to an increase in driving torque at the wheels. In order for optimum acceleration, the maximum possible driving torque must be transferred to the road. If driving torque exceeds that which can be transferred, then wheel slip will occur.

Throttle actuator

Wheel Spin When wheel spin is detected, the throttle position and ignition timing are adjusted. However, better results are gained when the brakes are applied to the spinning wheel. When the brakes are applied, a valve in the hydraulic modulator assembly moves over to allow traction control operation. This allows pressure from the pump to be applied to the brakes on the offending wheel. The valves, in the same way as for ABS, can provide pressure build up, pressure hold, and pressure reduction. This all takes place without the driver touching the brake pedal.

Hydraulic modulator assembly

Electronic Stability Program (ESP) ESP systems intervene to ensure stability under a wide range of situations. Shown here is the difference between a vehicle with and without a stability control system. Sensors supply an electronic control unit with information on vehicle movement, such as rotation about a vertical axis. This is known as yaw. By controlling the driving force from the engine and the braking force to individual wheels, the vehicle can be kept in a stable condition. This occurs even if the driver is not fully in control!

Summary Traction control is designed to prevent wheel spin when a vehicle is accelerating. This improves traction and ensures vehicle stability. Antilock brakes and traction control have now developed into complex stability control systems.

Explain why traction control is not normally available as an independent system, but in combination with ABS.

State THREE methods of controlling tractive force used by traction control systems.

Read the previous section again and note down some key bullet points here:

-
-
-
-
-

Service and Repair

Routine Maintenance

Scheduled Servicing Scheduled service requirements for the clutch are quite simple. The clutch should be checked for correct operation and the adjustment set if required. The clutch pedal should be secure and operate correctly.

Clutch components need routine maintenance

Non-Routine Work When carrying out routine maintenance, some non-routine work may be found. This should be reported to the driver or owner of the vehicle before expensive repairs are carried out.

Transmission oil leak

257. **Worksheet** Check and adjust clutch freeplay.

The freeplay on a clutch is to ensure that it will always fully engage. Initial symptoms of a problem include a slipping clutch, if not enough freeplay, or difficult gear changing, if too much. Check manufacturer's data for the correct setting.

Pedal Height Pedal height is usually altered by adjusting a stop bolt. This is located on the pedal box in the driver's foot well. Check manufacturer's data for the correct setting.

Pedal box

Cable Components The cable and automatic adjustment mechanism should be visually inspected for signs of wear or damage. A cable that is fraying should be replaced. Some automatic adjusters have teeth, which can wear out after prolonged use.

Clutch cable

Hydraulic Components Visually inspect all hydraulic components. Look for signs of fluid leaking from the master cylinder, pipes and slave cylinder. Repair any faults found. Top off the reservoir if need be.

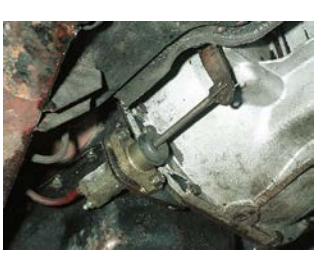

Slave cylinder

Clutch Adjustment Checking clutch freeplay is easier with an assistant. Check carefully how far the pedal moves before the clutch lever moves. Adjust to recommended settings where possible.

Checking the clutch lever

Automatic Adjuster Automatic adjusters do not often need attention. However, repair or replace the automatic adjuster if freeplay is incorrect. There are two main types: one uses a ratchet pawl and the other works with a sleeve on the cable.

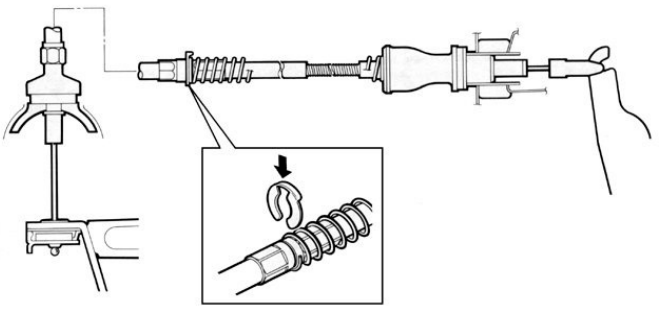

Cable adjuster[1]

Bleeding the Hydraulics Hydraulic systems may need some extra work. If the feel of the clutch pedal becomes "spongy" it may be necessary to bleed air out of the system. This is done by connecting a rubber tube to a bleed nipple on the slave cylinder. The other end of the tube is placed in a container holding a small amount of fluid. The clutch pedal is pumped slowly until all the air is expelled. Remember to keep the reservoir topped off during this process.

Pipe connected to the slave cylinder

Topping Off Always use the fluid recommended by the manufacturer. Be particularly careful not to spill fluid, which will damage paintwork. The same type of hydraulic fluid is usually used for the clutch and the brake systems.

Hydraulic fluid

Clutch reservoir

Summary Safety of all road users and pedestrians is essential. Reliable operation of the vehicle is also important. Therefore, the condition of the clutch is vital. Carry out a check at all service intervals.

Safety is important[2]

258. **Worksheet** Service transmission system.

Checking the transmission data

The service requirements for the transmission system are straightforward. However, it is still important that the work be carried out regularly and with care. The task mostly involves a quick check of the system and topping off of the oils. Note that you should always check manufacturers' data for the correct lubricant type.

Filling the gearbox oil

Gearbox Service To gain access to the gearbox and other components, jack up and support the vehicle or raise it on a hoist. Remove the plug in the side of the gearbox. This will require a square or a hexagonal tool. Note that two plugs are used, one to drain the oil at the bottom and the upper one for filling up. If the oil is not at the bottom of the upper opening, use a pump or squeeze bottle to top off. Do this until the oil just runs out of the hole. Refit the plug securely but do not over tighten and strip the threads.

Transmission Service To gain access to the gearbox and other components, jack up and support the vehicle or raise it on a hoist. Remove the plug in the side of the gearbox. This will require a square or a hexagonal tool. Note that two plugs are used, one to drain the oil at the bottom and the upper one for filling up. If the oil is not at the bottom of the upper opening, use a pump or squeeze bottle to top off. Do this until the oil just runs out of the hole. Refit the plug securely but do not over tighten and strip the threads.

259. **Worksheet** Service rear-wheel drive propshaft.

Propshaft

This task would normally be carried out as part of a general vehicle service and inspection. However, it may be necessary to check the propshaft at other times. Apply the parking brake and raise the vehicle on a hoist. Make sure the area is well lit so that you can see details. Exercise caution if the exhaust is still hot.

Checking the universal joints

Propshaft The first task is to check the propshaft for security and signs of damage. Make sure that any balance weights are secure. Look at the gearbox output seal where the propshaft sliding joint fits, and make sure it is not leaking. If the general area under the vehicle is oily, it may be necessary to steam clean it first.

Grease gun[5]

Universal Joints Check all of the universal joints (UJs) for signs of leakage. If grease is leaking, this may be a sign that the universal joint is overheating and in need of replacement. Some types have a grease-point fitted. If this is the case, use a grease gun to pump new grease into each. Clean off any excessive grease. Finally, check all mounting bolts for security.

260. **Worksheet** Service front-wheel drive driveshafts.

Driveshaft

This task would normally be carried out as part of a general vehicle service and inspection. However, it may be necessary to check the driveshafts at other times. Apply the handbrake and raise the vehicle on a hoist. Make sure the area is well lit so that you can see details. It is particularly important to check the area around the gaiters.

Driveshafts The first task is to check driveshafts for security and signs of damage. Make sure that any balance weights and dampers are secure. The dampers are simple rubber components, if fitted. Check for oil leaks from the final-drive output seals. Clean the area first and then check for clean oil. It may be necessary to take the vehicle on a road test in order to detect problems.

Driveshaft and CV gaiters in position

Constant- Velocity Joints Be sure to check the constant-velocity joint gaiters/boots for signs of leakage. Look for signs of black grease. It is possible for the strap or cable tie that holds the gaiter to come loose. Replace gaiters if cuts or any other damage is evident. If grease has been lost, repack the joint with the correct type. Clean off any excess from the driveshaft and surrounding area. Finally, check the main driveshaft nut and any other flange bolts for security.

Checking the gaiters

261. **Worksheet** Service final drive and differential

Vehicle on a hoist

Jack up and support the vehicle, or raise it on a hoist. Inspect the area around the final drive and differential unit for oil leaks. If necessary clean off old oil, road test and check again. Pay particular attention to the main gasket seals and the driveshaft output oil seals and/or the pinion input seal. Remove the filler/level plug and check the oil level. The oil should be level with or just below the threads of the plug. Check with a finger or probe if necessary.

Front Wheel Drive If topping off is necessary, refer to the manufacturer's specifications for the correct oil. On many front wheel drive cars, the oil for the final drive and differential is the same as for the main gearbox, because the units are combined. Some vehicles should have the oil changed at certain intervals. If this is the case, drain out the old oil into a tray. It is better to do this after a road test during which time the oil will become warmer and therefore drain out more easily. Some rear axle, final drive and differential units do not have a drain plug. In this case, the cover must be removed to drain oil.

Use the correct grade of oil

Rear Wheel Drive On rear wheel drive vehicles with fixed axles and halfshafts, it may be necessary to check for oil leaks into the brake drums on the rear. This would normally be carried out during servicing of the brakes. Refit any plugs and covers that were removed. Lower the vehicle to the ground.

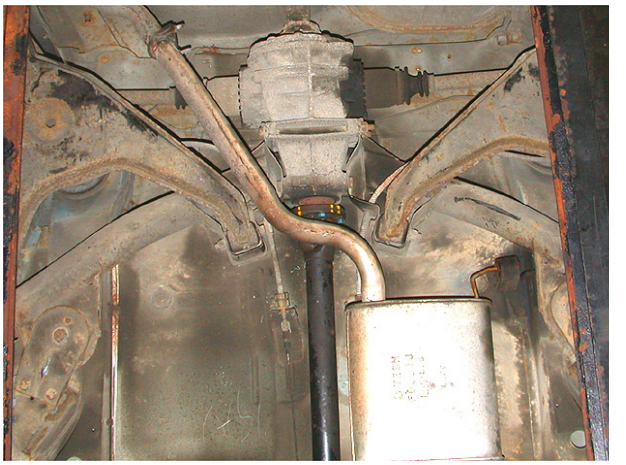
RWD final drive layout

262. **Worksheet** Service 4WD/AWD final drives and differentials

Topping off the oil

This operation is similar to the previous task. However, 4WD/AWD vehicles have three differentials and a transfer box. Raise and support the vehicle or use a hoist. Check and top off oil levels; front gearbox/ final drive and/or transfer box and rear differential. Check all seals and gaskets for leaks. Check security and condition of all mountings and drive joints.

Electronic Systems Some four-wheel drive systems are now electronically controlled. If so, carry out a fault code check of the system. Dedicated test equipment may be required. However, a 'fault memory' warning light will be lit if a problem is stored in memory.

Volvo system[2]

Summary The safety of all road users and pedestrians is essential. Reliable operation of the vehicle is also important. The condition of all systems is therefore vital. Carry out a check at all service intervals.

Read the previous section again and note down some key bullet points here:

-
-
-
-
-

Remove, Replace, Strip and Rebuild Components

Introduction The main inspections and measurements carried on the system are included in this section. Inspections should take place at scheduled service intervals, and anytime problems have been reported.

Clutch positions…

Vary…

263. **Worksheet** Replace clutch assembly.

Always obtain and follow the manufacturer's procedures for work such as this. The first job is to disconnect the battery (earth first) and fit a memory keeper if necessary. The procedure outlined here is generic and therefore not applicable to all vehicles.

Clutch and gearbox in position

Supporting the Vehicle The vehicle must be supported on a hoist for most clutch removal jobs. Ensure it is securely positioned and that the wheels are chocked. Remove the starter motor and driveline components.

Car on a hoist

Transmission Removal Remove the clutch cable or the slave cylinder if used. Remove the transmission components, following procedures at all times. It may be necessary, on some vehicles, to support the engine. This is because some gearbox mountings also support the engine. Remove the clutch fork and release bearing assembly.

Remove the clutch cable

Clutch Cover and Plate Remove any dust using recommended health procedures. Mark the clutch cover if necessary and remove the ring of bolts. Remove clutch cover and plate. Inspect, repair or replace as necessary. It is usual to replace the plate, cover and bearing as a set, but not essential.

Removing the clutch cover

Flywheel Condition Check the condition of the flywheel using a dial gauge. It is possible for the flywheel to become warped due to excessive heat from a slipping clutch. Refer to manufacturers' data for the maximum permissible run out.

Check the flywheel contact surface

Alignment Select the correct alignment tool for the spigot bearing and disc. The small end of the tool fits into the spigot bearing and the larger diameter fits inside the splines of the disc. Using the alignment tool, replace the disc and cover. Secure the cover with the ring of bolts, setting them to the correct torque

Align and…

Fit the clutch…

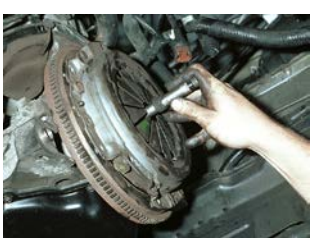
To the flywheel…

And secure the bolts

Testing Refit all the transmission components in a reverse of the removal process. Set the clutch freeplay to the manufacturer's recommended value. Test the clutch operation in the workshop and then on a road test.

264. **Worksheet** Remove and refit transmission gearbox (transaxle type).

The procedure outlined here is generic and relates to a front-wheel drive vehicle. You should refer to specific manufacturer's data as required. The first task is to support the vehicle on a suitable hoist. Fit a car protection kit as required and disconnect the battery. Remember to hook up a memory keeper if necessary. Drain the gearbox oil.

Disconnect the battery ground

Gearbox Removal Remove any ancillary components as necessary. This will allow easier access to the gearbox. For example, the exhaust may need to be removed. Mark the gear change linkage and then remove parts as required. Remove the minimum number of parts or remove the linkage as a complete unit where possible. This makes reinstalling a lot easier. On some vehicles, it is necessary to remove the suspension on one side to allow access to the gearbox, and for removal of the driveshafts. Remove the driveshafts from the final drive.

Gear change linkage

Removing the driveshafts

Engine Support Remove the speedometer cable or speed sensor. Remove the reverse (back-up) light switch wires. Tie these components out of the way. Remove the starter motor if necessary. Use an engine support bar as required; remove mountings, and cross members. Support the gearbox on a transmission jack if necessary and remove the gearbox or bell-housing bolts. Move the gearbox straight out of the clutch assembly, away from the vehicle and place on a suitable bench.

Speedometer connection

Mountings

Bell housing bolts

Gearbox being removed…

Refitting the Gearbox As usual – reinstallation is a reversal of the removal process! However, it is normal to strip and check the clutch assembly if the gearbox is removed. When the clutch assembly is refitted, make sure it is aligned correctly. This makes refitting the gearbox much easier. Remember to refill the gearbox with the correct lubricant and check that all fixings are tightened correctly. A road test is recommended to ensure correct operation when the job is completed.

Clutch aligned position

Refitting the gearbox

Securing the mounting bolts

Top off the oil

265. **Worksheet** Remove and refit gear change mechanism.

This is a generic procedure for a rear-wheel drive vehicle. Refer to specific manufacturer's data as required. Disconnect the ground cable from the battery. On some cars, it will be necessary to remove the passenger's seat or driver's seat to gain access.

Removing the covers

Gear Linkage Removal Remove the knob at the top of the gearshift. Most will unscrew but some are held with a small screw. Remove console covers, gaiters and panels as necessary to gain access. Disconnect the shift-rod levers or unscrew the ball-joint cover as appropriate. Disconnect the electrical wiring for the overdrive switch (if fitted) and remove the gearshift.

Gear change mechanism

Refitting the Linkage Place the gearshift in position and install the ball-joint cover or shift-rod levers. Adjust the linkage if necessary. Connect the overdrive electrical switch wiring (if fitted). Finally, reinstall the covers, panels and other components as appropriate.

Refitting the gaiters

266. **Worksheet** Remove and refit wheel bearings.

Apply the parking brake and loosen the road wheel nuts. Raise the front or rear of the vehicle as required, support it on stands and remove the road wheel. The methods outlined here are generic. Refer to manufacturers' data for specific instructions.

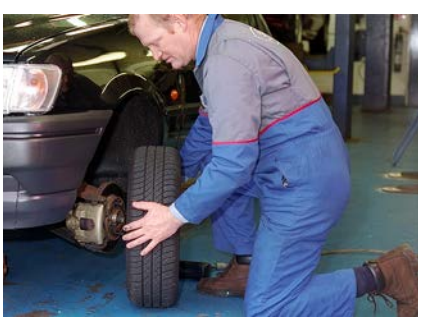
Wheel being removed ready for repair work

Front Hub Assembly Remove the drive shaft nut split pin. Use an assistant to apply firm pressure to the brake pedal and, while the brake is applied, unscrew the driveshaft nut. Remove the brake caliper and the disc. Using a ball-joint breaker tool, disconnect the joint from the steering arm. Unscrew the nuts and remove the bolts to release the strut from the hub assembly. Unscrew the nut and remove the clamp bolt securing the lower ball joint to the hub assembly. Place a suitable lever between the lower arm and the anti-roll bar. Push downward to release the ball joint from the hub. Finally, remove the hub from the drive shaft.

Removing the hub nut

Bearings and Seals Extract the inner oil seal, spacer and outer oil seal. Drive out one of the bearings, invert the hub and drive out the remaining bearing. Inspect the bearings for signs of wear and damage; replace as necessary. Pack the new bearings with suitable grease and press them into the hub. Fit the oil seals and spacer. Locate the hub on the drive shaft. Fit the flat washer and drive shaft nut.

Front hub components

Refitting the Hub Extract the inner oil seal, spacer and outer oil seal. Drive out one of the bearings, invert the hub and drive out the remaining bearing. Inspect the bearings for signs of wear and damage; replace as necessary. Pack the new bearings with suitable grease and press them into the hub. Fit the oil seals and spacer. Locate the hub on the drive shaft. Fit the flat washer and drive shaft nut.

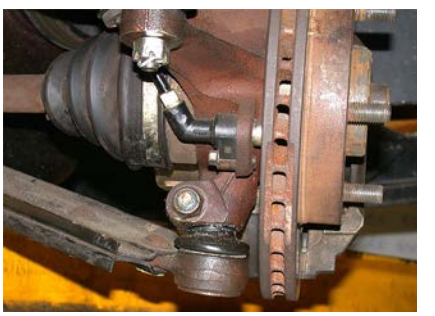
Lower ball joint

Rear Hub Assembly Withdraw the grease retainer cap from the center of the hub and extract the split pin from the stub shaft. Unscrew the hub nut, remove the flat washer and withdraw the hub and brake drum assembly. Extract the hub oil seal, drive the inner bearing out and collect the spacer. Invert the hub and brake drum assembly and drive out the outer bearing. Inspect the bearings for signs of wear and damage; replace as necessary.

Rear hub components

Bearings Pack the bearings with suitable grease and press the outer bearing into the hub with the side marked THRUST facing outward. Invert the hub, fit the spacer and press the inner bearing with the side marked THRUST outward into the hub. Dip the new oil seal in oil and press it into the hub (sealing lip facing inward). Fit the hub and brake drum assembly to the stub shaft, fit the flat washer and fit and tighten the hub nut to the correct torque. Lock the nut with a new split pin. Fit the grease retainer cap, and then fit the road wheel and nuts.

Packing bearings with grease

267. **Worksheet** Remove and refit driveshaft.

Apply the parking brake and loosen the road wheel nuts. Raise the front of the vehicle, support it on stands and remove the road wheel. Remove the driveshaft nut split pin or lock tab. Use an assistant to apply the foot brake and then remove the driveshaft nut and washer.

Driveshaft

Driveshaft Removal Split the steering track rod end from the steering arm and remove it. Remove the bolts securing the hub to the suspension strut. Pivot the hub outward to the limit of its movement, but be careful not to strain the brake hose. Maneuver the drive shaft from the hub. Carefully pry between the driveshaft inner joint and the differential housing to release the spring ring. Withdraw the driveshaft.

Splitting the track rod end joint

Driveshaft Refitting Split the steering track rod end from the steering arm and remove it. Remove the bolts securing the hub to the suspension strut. Pivot the hub outward to the limit of its movement, but be careful not to strain the brake hose. Maneuver the drive shaft from the hub. Carefully pry between the driveshaft inner joint and the differential housing to release the spring ring. Withdraw the driveshaft.

Refitting the strut

268. **Worksheet Remove and refit differential oil seals (FWD)**

Raise the front of the vehicle and support it on stands. Place a receptacle under the differential to catch oil when the drive shaft is removed, or alternatively, drain sufficient oil from the gearbox to reduce the level below the differential oil seals.

Differential oil seal in position

Remove Differential Oil Seals Remove the road wheel, release the tie rod from the steering arm, and disconnect the swivel hub from the front strut. Disengage the drive shaft from the differential and remove the differential oil seal.

Radial lip type oil seal

Refit Differential Oil Seals Fit a new differential oil seal, with the seal lips towards the differential. Use special press tools as required. Lubricate the seal lips and insert the driveshafts. Connect the swivel hub and tie rod and fit the road wheel. Lower the vehicle, check the gearbox oil level and top off as necessary.

Removing the seal

Refitting the seal

269. **Worksheet** Remove and refit final drive and differential (FWD & RWD).

Draining the gearbox oil

Drain the oil from the gearbox and refit the drain plug. Remove the gearbox from the vehicle (this is a separate worksheet). Position the gearbox on its bell housing face and remove the gear case, selector shafts and forks, the mainshaft, and countershaft. Lift out the final drive gear and differential assembly.

Remove Final Drive – FWD Remove the roller bearing from the bell housing. Remove the carrier bearings. Remove the differential oil seals. Remove the bolts securing the final drive gear to the differential housing and withdraw the final drive gear. Remove the roll pin securing the differential pinion shaft and remove the pinion shaft. Remove the planet gears, thrust washers and the sun gears. Clean all components and examine for wear and damage.

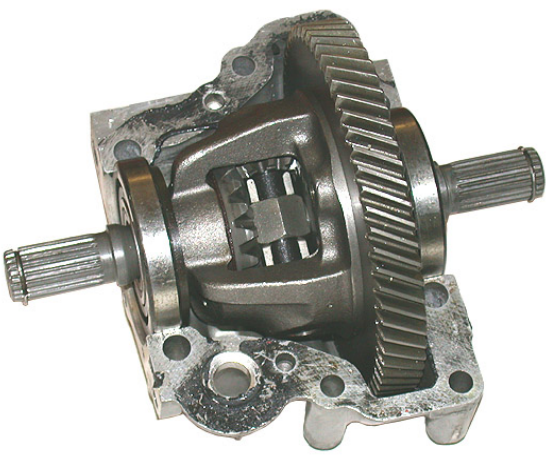
Final drive assembly

Refit Final Drive – FWD Fit the pinion roller bearing to the bell housing. Lubricate and fit the sun gears, planet gears, and the differential pinion shaft. Ensure that the roll pinhole is aligned with the differential housing and fit a new roll pin. Select a thrust washer, which will provide the correct backlash. Thrust washer dimensions must be equal in both gears. Backlash may be checked using the vehicle drive shaft inner couplings to centralize the sun gears.

Lubricating the sun gears

Final Drive and Differential Assembly Ensure that the mating faces of the final drive gear and the differential housing are clean and free of burrs. Fit the final drive gear and secure the bolts to the correct torque. Fit the carrier bearings. Fit the final drive and differential assembly to the bell housing.

Gasket surfaces of the final drive assembly must be clean

Gaskets and Seals Fit the differential oil seals using special tools as required. Lubricate the seal lips. Fit the gearbox components. Apply sealant to the gear case face and fit the gear case. Fit the gearbox to the vehicle and fill with the correct grade and quantity of oil.

Drain plug and differential oil seal

Remove Final Drive – RWD Jack up and support on stands. Remove the wheels and then undo, and remove the brake drums. Unscrew the bolts holding the bearing clamp and pull out the halfshafts. A slide hammer may be required. Remove the propshaft. Drain oil from the unit if possible – or use a tray to catch the oil as the whole unit is removed. Undo the ring of bolts around the final drive housing. Remove the final drive assembly – with assistance if necessary.

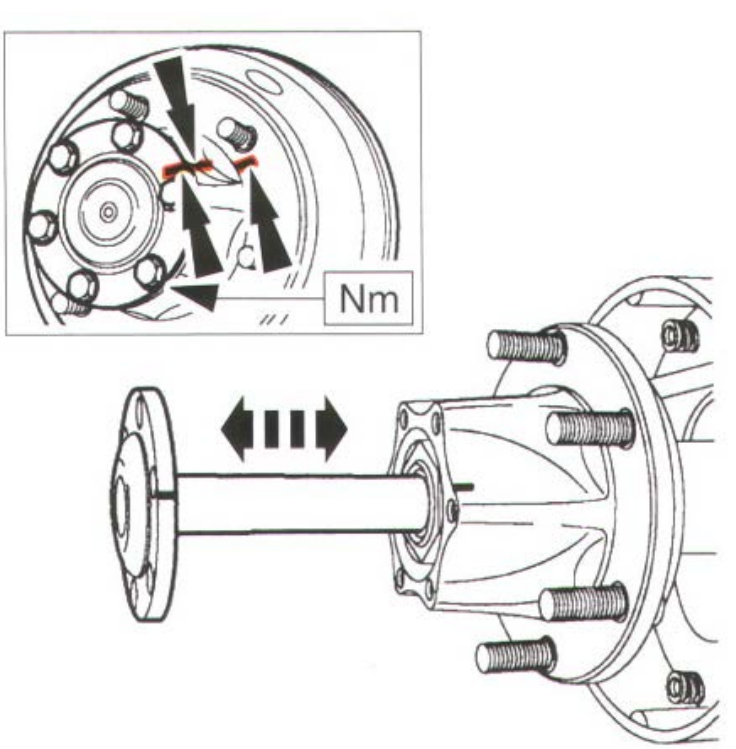

Removing a halfshaft[1]

Refit Final Drive – RWD Clean off any old gaskets from the mating surfaces. Renew gaskets and use sealant as required. Refit the RWD final drive unit and torque the bolts in sequence. Refit the halfshafts, secure the halfshaft bearings, and fit the drums and wheels. Refit the propshaft. Finally, fill up with the correct oil.

Topping up the final drive oil

270. **Additional Worksheet** Remove and refit transmission gearbox – transaxle 4x4

271. **Additional Worksheet** Remove and refit propshaft and UJ and center bearing

Read the previous section again and note down some key bullet points here:

-
-
-
-
-

Fault Diagnosis

Checking the System

Introduction System performance checks are routine activities that occur during all servicing work. They start at pre-delivery and continue for all scheduled service intervals.

Clutch systems may need checking[2]

272. **Worksheet** Check clutch for chatter/judder.

Checking for clutch judder

Apply the parking brake, depress the clutch and start the engine. Select first gear and increase the engine speed to about 1,500 rev/min. Slowly release the clutch pedal and note clutch operation as the pressure plate first makes contact. Select reverse gear and repeat the test. If chatter/judder occurs, raise the vehicle on a hoist for further inspection.

Judder or Chatter Check for loose engine mountings, loose or missing bellhousing bolts and for a damaged linkage. Correct any faults found. Lower the vehicle and repeat the test procedure. If no faults are found then the clutch may have to be removed and replaced.

273. **Worksheet** Check for clutch drag.

Apply parking brake, depress the clutch and start the engine. Select first gear but do not release the clutch. Next, select neutral but again do not release the clutch. Wait ten seconds, select reverse and check for a clash.

Drag If a clash is noticed, check the clutch linkage. Correct any faults found with the linkage and repeat the previous tests. If no faults are found then the clutch may have to be removed and components replaced.

Checking the clutch linkage

274. **Worksheet** Check clutch for slippage

Apply the parking brake and chock all wheels. Run the engine until it reaches normal operating temperature. Select a high gear (e.g. fourth) and run engine at about 2,000 rev/min. Release clutch pedal slowly until, if possible, it is fully engaged.

Chock the wheels securely

Slippage The engine should stall when the previous test is carried out. If not, raise vehicle on a lift and check clutch linkage. Correct any problems found. If linkage was at fault, repeat the previous tests. If the linkage is in order, then the clutch will have to be removed for repair.

Testing for clutch slippage

275. **Worksheet** Check for clutch pedal pulsation.

Apply the parking brake and start the engine. Slowly depress the clutch until it just begins to disengage. Note any pedal pulsations (some minor pulsations are to be expected). Depress further and again, note any pedal pulsations.

Pulsation If pulsations are noted during the test, check the crankshaft damper and other engine ancillaries. Correct any faults and repeat the above tests. If all is in order, then the clutch will have to be removed for repair.

Crankshaft damper pulley

Ancillaries drive belts

276. **Worksheet** Check transmission operation.

Transmission components

As a preliminary procedure, perform a visual inspection as part of the diagnostic routine prior to a road test and note anything that does not look right. Check the tire pressures, look for fluid leaks, loose parts, and bright spots where components may be rubbing against each other. Check the trunk for unusual loads. Finally, check all of the transmission oil levels.

Road Test Establish a route that will be used for all diagnosis road tests. This allows you to get to know what is normal and what is not! The roads selected should have reasonably smooth sections. Road test the vehicle and check any unusual condition by reproducing it several times. Normally the whole transmission system will be road tested. However, just the issues relating to the gearbox will be examined in detail here.

Road Test Conditions Use ALL the gears during the test and recreate the following conditions:

Check for any unusual vibrations from the gear lever

Normal driving speeds of 20 to 80km/h (15 to 50 mph) with light acceleration

Harder acceleration and deceleration

Low speed and high speed

Over run or coast down

Coasting with the clutch pedal down or gear lever in neutral and engine idling.

Road Test Symptoms Under the road test conditions, stated previously, check for the following gearbox symptoms:

Rumbling noises - may indicate worn bearings

Whining noises - may indicate worn or incorrectly set gears

Crunching noises when changing gear - may indicate synchronizer problems

Jumping out of gear - may indicate a detent or synchronizer problem

Knocking at low speed - may indicate that a gear is chipped.

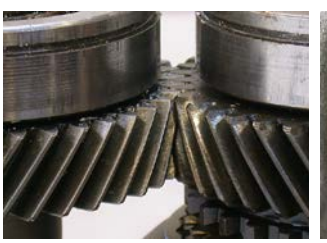
Gear

Bearing

Synchronizer

Detent

Transmission Inspection After the road test, continue to inspect the vehicle after raising it on a hoist. In particular, look for oil leaks and loose mountings. Check the security and condition of the gear-change mechanism. After a thorough test, you may need to tell the customer that the problem is in the gearbox, but that you will have to remove it before a detailed diagnosis is possible. On older vehicles, many workshops will recommend that the gearbox be replaced. This allows accurate pricing for the customer and, assuming quality parts are used, a guarantee of reliability.

277. **Worksheet** Check gear-change operation and adjust linkage.

Raise the vehicle on a hoist or use a jack and stands as required. Check and top off all transmission fluid levels. Linkages vary from a single rod to cable operation.

Gear change linkage

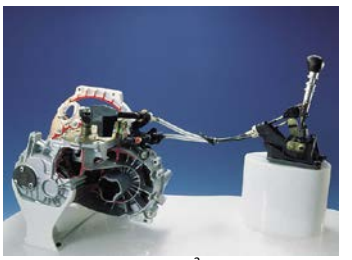
Cable change gearbox[2]

Gear-Change Operation Using a lever, check rubber transmission mountings for excessive movement. Move the gear-change linkage – with help from an assistant, if necessary – and check for damage or wear. Make sure each gear is selected during the checking process.

Gear-Linkage Adjustment If adjustment is required, refer to the manufacturer's specific recommendations. Some require a special tool; others recommend measurements that should be taken and the lengths of threaded rods to be set. If a linkage has to be removed for repair work, mark it carefully first. Use small scratches or dot punch marks. Complete the checks or adjustment routines with a road test.

Adjustment information

278. **Worksheet**

Check driveline components.

The next few screens consider the propshaft used for rear-wheel drive and 4-wheel drive systems. First, select neutral and raise the vehicle on a hoist. Check for oil leaks from the propshaft sliding-joint at the gearbox output and from the differential/final drive input. Also, check for leaks from the universal joints.

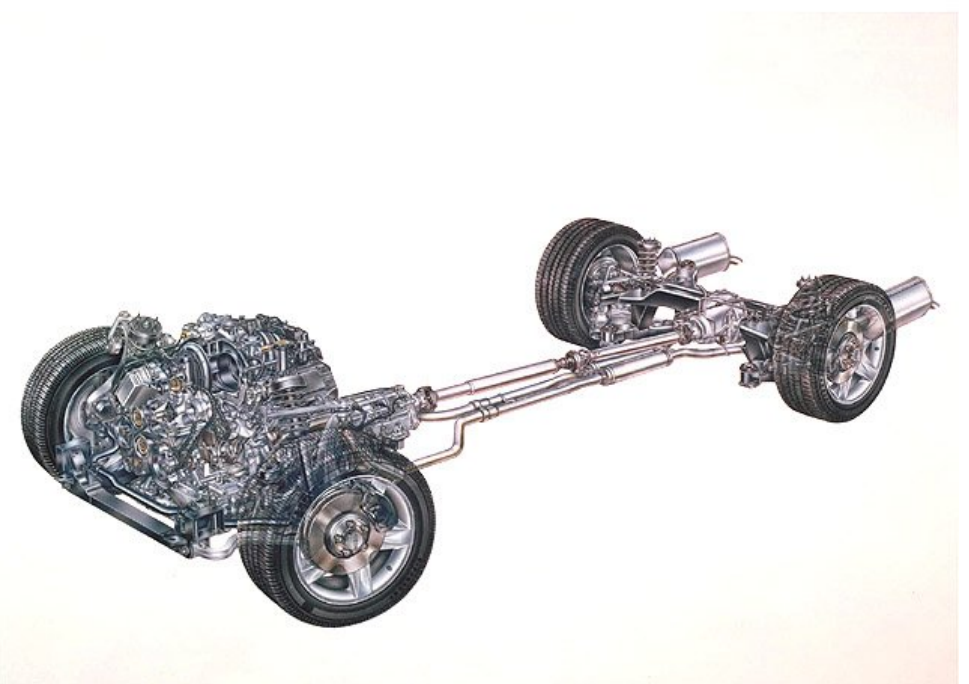
Drive system layout[2]

Propshaft To check the propshaft, start by holding one part of each universal joint in turn and trying to rotate the other part back and forth. Using a wrench, check the security of all fixing bolts. There are usually four at each end. Make sure that any balance weights on the shaft are secure. If a center bearing is fitted, check the bearing by rotating the propshaft (free the wheels for this). Make sure the mountings are secure and that the rubber is in good condition. If a donut drive is fitted, check it for security and condition.

Rear driveshaft or propshaft

Driveshafts The next few screens consider the driveshafts used for front-wheel and 4-wheel drive systems. First, check for leaks from the differential output seals. Watch for leaks from the driveshaft boots/gaiters. Make sure the clips that hold them in place are secure. Check the security of any fixing nuts and bolts. Bolts are used to secure the inner part of some driveshafts to a drive flange.

CV joint gaiter

Driveshaft Movement The driveshaft should have some axial movement (back and forth lengthways). However, there should be no rotational freeplay in the constant-velocity joints. Check this by holding each side of the joints and twisting. Check that any balance weights on the shaft are secure. If fitted, check that the damper is secure. The driveshaft main nut should be secure and be locked in place. This is usually done by a split pin or lock tab.

Driveshaft main nut

279. **Worksheet** Checking for noise, vibration and harshness (NVH).

To check for noise, vibration and harshness, carry out a thorough visual inspection of the vehicle before conducting a road test. Look for leaks and loose nuts or bolts. Also, check for bright spots on drive shafts, which may indicate components rubbing. Check the tire pressures. Establish a drive test route that will be used for all diagnostic road tests. This allows you to get to know what is normal and what is not.

Checking a driveshaft

Road Test Note the following during the road test. Use normal driving speeds of 20 to 80km/h (15 to 50 mph):

Slowly accelerate and decelerate, listening for knocking.

At high speed, a vibration may be felt in the front floor pan or seats with no visible shake.

A vibration may be felt whenever the engine reaches a particular speed. It may disappear when coasting in neutral. Operating the engine at the problem speed while the vehicle is stationary may duplicate the vibration.

Noise and Vibration In particular, check for noise and vibration while turning. Listen for clicking, popping, or grinding noises. These may be due to:

Damaged constant-velocity joints

A loose front wheel

Another component coming in contact with the driveshaft

Worn, damaged, or incorrectly installed wheel bearings

Damaged powertrain or drivetrain mountings.

Damaged wheel bearing

Transmission Problems After the road test, raise and support the vehicle with all of the wheels running free. Explore the speed range of interest, using the road test checks as previously discussed. Carry out a coast down test (overrun) in neutral. If the vehicle is free of vibration when operating at a steady engine speed but behaves very differently in drive and coast, a transmission problem is likely.

Car with wheels free on a hoist

Duplicated Conditions A test on the hoist may produce different vibrations and noises from a road test. It is usual to find a vibration on the hoist that was not noticed during the road test. If the condition found on the road can be duplicated on the lift, carrying out experiments on the lift may save a great deal of time. Check all of the engine and transmission mountings.

280. **Worksheet** Check transmission operation by road testing.

Checking the tires

Make a visual inspection as part of the preliminary diagnosis routine prior to the road test; note anything that does not look right. Check tire pressures, but do not adjust them yet (unless excessive). Look for fluid leaks, loose nuts and bolts, and bright spots where components may be rubbing against each other. Check the trunk for unusual loads.

Road Test Procedure Establish a route that will be used for all diagnosis road tests. This allows you to get to know what is normal and what is not! The roads selected should have sections that are reasonably smooth as well as other conditions. Road test the vehicle and define the condition by reproducing it several times throughout the road test. During the road test, recreate the conditions described over the next screens.

Road test preparation

Normal Driving Speed Normal driving speeds of 15 to 50mph (20 to 80km/h) With light acceleration, a moaning noise may be heard and possibly a vibration is felt in the front floor pan. It may get worse at a certain engine speed or load.

Acceleration/Deceleration With slow acceleration and deceleration, a shake is sometimes noticed through the steering wheel seats, front floor pan, front door trim panels, and so on.

High Speed A vibration may be felt in the front floor pan or seats, with no visible shake, but with an accompanying sound or rumble, buzz, hum, drone or booming noise. Coast with the clutch pedal down or gear lever in neutral and engine idling. If vibration is still evident, it may be related to wheels, tires, front brake discs, wheel hubs, or wheel bearings.

Engine Speed A vibration may be felt whenever the engine reaches a particular speed. Operating the engine at the problem speed while the vehicle is stationary can duplicate the vibration. It can be caused by any component, from the accessory drive belt to the clutch or torque converter, which turns at engine speed when the vehicle is stopped.

Noise and Vibration While Turning Clicking, popping, or grinding noises may be due to the following:

Damaged CV joint

Loose front wheel driveshaft joint boot clamps

Another component contacting the driveshaft

Worn, damaged, or incorrectly installed wheel bearing

Damaged powertrain/drivetrain mounts.

Damaged driveshaft

281. **Worksheet** Workshop task: Checking the viscomatic lock in the rear differential.

Slacken the wheel nuts on one of the rear wheels, and release the handbrake. Jack up the rear of the vehicle and remove the wheel. The front wheels must remain in contact with the ground. Apply a torque wrench to the hub nut and turn the wheel approximately half a turn within one second using the torque wrench. A torque reading of 70 ± 30 Nm should be obtained. Check with the manufacturer's data for specific readings.

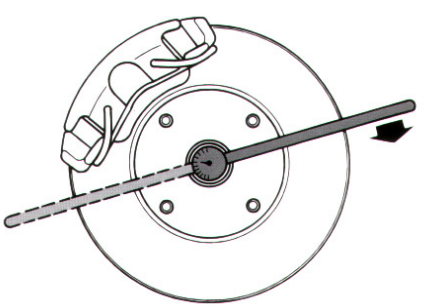

Checking the viscomatic lock[1]

Viscomatic Lock The free wheel must turn in the opposite direction of the wheel turned with the torque wrench. If the driveshaft turns as well, it must be immobilized. If the specified torque reading is not obtained, the complete viscomatic lock must be changed.

Summary **Transmission components make a contribution toward the safety of the vehicle. Therefore, system performance checks are important. Cars are operated at high speeds, and sudden breakdowns can be dangerous. It is important that systems function correctly at all times.**

Read the previous section again and note down some key bullet points here:

-
-
-
-
-

Inspect and Measure Components

Introduction The main inspections and measurements carried on the system are included in this section. Inspections should take place at scheduled service intervals, and anytime problems have been reported.

Inspections and measurements are important[2]

Clutch Adjustment Checking clutch freeplay is easier with an assistant. Look at how far the pedal moves before the clutch lever moves. Adjust to recommended settings where possible. Most systems, however, have an automatic adjuster mechanism. Ensure this is operating correctly.

Checking the clutch lever

Fluid Condition Brake and clutch fluid is hygroscopic. This means that it absorbs water. For this reason, the fluid may need to be changed periodically. Follow manufacturers' recommendations.

Brake/Clutch fluid

282. **Worksheet** Inspect and measure clutch components

It is important to visually check all parts for scoring, burning and other faults before carrying out measurements. If in any doubt, it's a good idea to replace the components.

Clutch cover and pressure plate

Cover Warping Check the flywheel cover for warping by using a straightedge and a set of feelers. Place a straightedge across the pressure plate and check any gaps using the feelers. Compare to specifications and, if excessive, replace the cover.

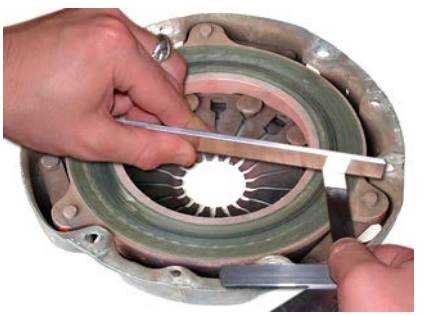

Straight edge and feelers in use

Flywheel Run-Out Check the flywheel cover for warping by using a straightedge and a set of feelers. Place a straightedge across the pressure plate and check any gaps using the feelers. Compare to specifications and, if excessive, replace the cover.

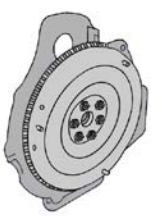

Flywheel

DTI[5]

Spigot Bearing Freeplay The freeplay in the spigot or pilot bearing can be tested by using the correct alignment adaptor. Rock the tool left to right and gauge the movement. Some movement is to be expected; however, if in any doubt, replace the bearing.

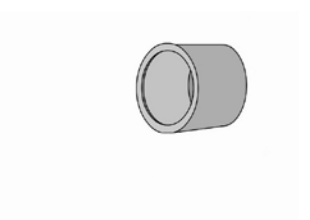

Spigot bearings

Alignment kit

Lining Thickness In most cases, the thickness of the clutch plate friction material can be assessed by eye. However, it may be necessary to make a measurement using a caliper gauge. Compare this to manufacturer's data.

Clutch plate

Lining Condition Linings can become contaminated with oil. The usual cause of this problem is a leak from the rear main crankshaft oil seal. This should be replaced if it is showing any signs of leakage.

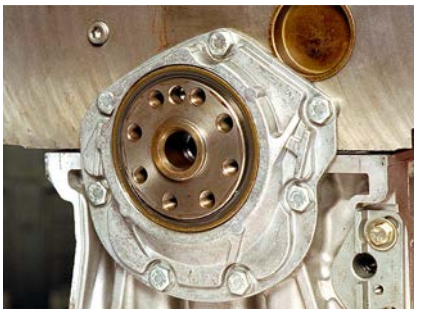
Crankshaft oil seal

283. **Worksheet** Inspect and measure gearbox components.

Stripping the gearbox

Gearbox components and methods of removal vary considerably between manufacturers. This list is a general guide to the process of checking and measuring. For instructions on disassembly, refer to specific manufacturer's data.

Ball and Roller Bearings Wash the bearings in a solvent and dry them. Rotate the inner and outer races. Listen for noises and feel for any tight spots. Replace them if a problem is suspected.

Input shaft bearing

Needle roller bearing

Main Gears and Mainshaft Look for signs of wear and chipped teeth. Use a wire to check any oil passages. Check all areas for wear and damage. The mainshaft bearing surfaces can be measured with a micrometer and compared to data. Remember to check inside the bearings as well as the shaft.

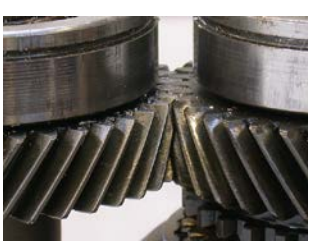
Gear teeth

Layshaft/Counter Gear Assembly On many gearboxes, the layshaft/counter gear is a single assembly. The gears should be checked for wear and chipping; the bearing surfaces should be checked for wear and ovality using a micrometer.

Layshaft

Synchronizers The main parts to check are the synchronizer cone clutches and the dog clutches. Also, check the grooves where the selector forks run for signs of wear. This is a moving component and is more likely to wear.

Selector and synchronizer mechanism

Reverse Gear and Shaft Look for signs of wear and chipped teeth. Use a wire to check any oil passages. Check bearing surfaces on the shaft. Also, check the reverse gear-selector mechanism for signs of wear.

Idler shaft and reverse gear

Input Shaft Assembly Look for signs of wear and chipped teeth. Use a wire to check any oil passages. Check bearing surfaces on the shaft. Also, check the reverse gear-selector mechanism for signs of wear.

Gearbox input shaft

Selector Rods and Forks Check for wear and signs of overheating, which may occur if the forks have been rubbing. This may occur if the driver holds the gearshift after a gear is selected.

Selectors

Detent and Interlock Mechanism Check for wear and signs of overheating, which may occur if the forks have been rubbing. This may occur if the driver holds the gearshift after a gear is selected.

Interlock components

Detent mechanism

Gearbox Casing and Other Components Check the casing for cracks and porosity. Use new gaskets and seals when rebuilding. Any other parts such as the speedometer drive gear and the reverse light switch should be checked for security and correct operation.

Output oil seals

Speedometer drive gears

284. **Worksheet** Measure propshaft/driveshaft run out.

Raise the vehicle on a hoist and free the driven wheels. Clean the three bands around the propshaft/driveshaft at the front, center and rear. Mount a dial gauge on a magnetic stand and attach the stand to a solid part of the vehicle body.

Propshaft

Run Out Readings Take run-out readings at the front, center and rear of the shaft. If necessary, unbolt and disconnect the shaft at one end, turn it half a turn and reconnect. Take run-out readings at the front, center and rear of the propshaft/driveshaft once again. Compare readings to the manufacturer's specifications. If necessary, replace the propshaft/driveshaft.

Dial gauge in position

285. **Worksheet** Strip down CV joint and assess its condition.

Remove the driveshaft from the vehicle as described in the appropriate worksheet. Release the two clips securing the outer joint gaiter/boot.

CV joint gaiter

CV Joint Removal Peel back the boot to expose the joint and use a hide mallet to drive the joint from the shaft. Remove the spring ring from the shaft and remove the gaiter/boot. Examine the shaft, gaiters/boots and joints for wear and damage. Replace as required. On many systems, the complete shaft must be replaced if the inner joint is damaged because it forms part of the main shaft.

Removing the CV joint

CV Joint Rebuild To rebuild, fit the gaiter and a new spring ring. Compress the ring so the outer joint can be fitted onto the shaft. Use a hide mallet to drift the joint in to place over the spring ring. Pack the joints with grease as specified by the manufacturer and secure the gaiters. Refit the driveshaft to the vehicle as described in the appropriate worksheet.

Securing the gaiter

286. **Worksheet** Inspect and measure differential bevel gears.

Note, self-locking differentials are normally factory set and must be changed as a complete unit. Check the specific manufacturer's recommendations. Remove the final drive unit and then strip out the crown wheel and differential. On many systems, halfshaft gears (sun gears) can be examined for excessive play using a feeler gauge.

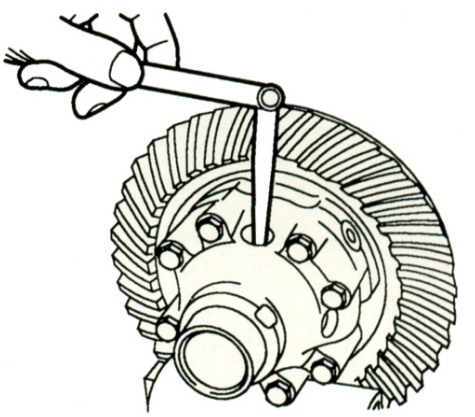
Checking the freeplay[1]

Halfshaft Gear Freeplay If the reading is above the recommended value (often about 0.15mm, but check data), thrust plates must be renewed. Before separating the two halves of the differential, mark their relative positions. Examine all the components for wear and damage. Renew the thrust plates and check that the halfshaft bevels run smoothly. Use Loctite, or similar thread locking material, and tighten the bolts in sequence to the specified torque. Rebuild final drive unit. Refit to vehicle and top off with oil.

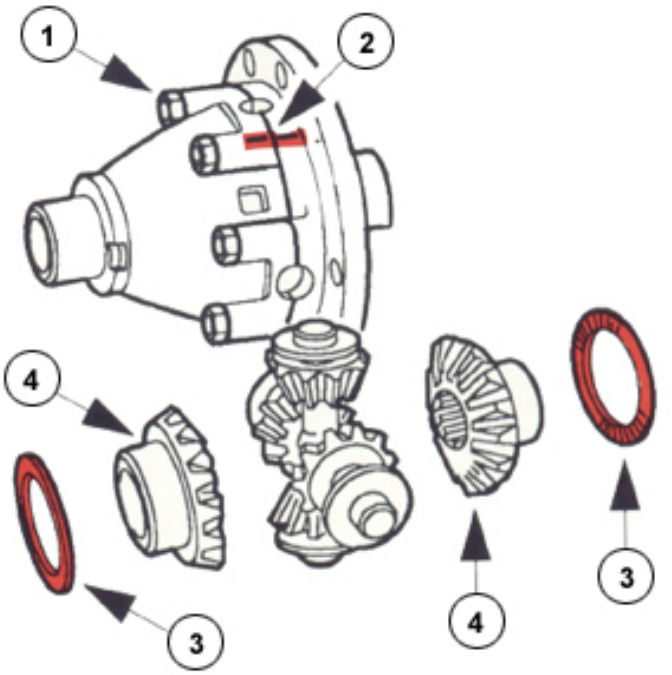

Differential bevel gears and thrust plates[1]

287. **Worksheet** Inspect and measure crown wheel backlash, final drive tooth wear and pinion turning torque.

Remove final drive and differential assembly from the vehicle. Note that the figures listed here are typical but always refer to data specific to the vehicle. Backlash describes the movement of the crown wheel before it contacts and moves the pinion. It is adjusted by setting the position of the two main bearings. Tighten bearing cap bolts and slacken off again. Then tighten the cap bolts finger tight.

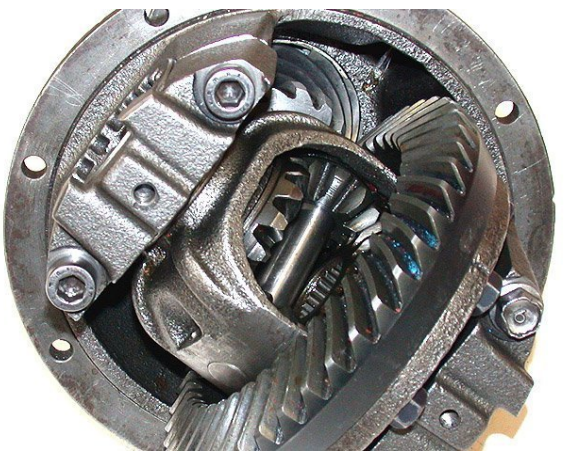
Final drive and differential assembly

Crown Wheel Backlash Screw the two adjusting nuts, with a special tool if necessary, lightly against the bearings. Set a dial gauge on a magnetic stand and against one tooth of the crown wheel. Tighten the adjusting nut on the crown wheel side until a backlash of 0.01mm is obtained. Next, preload the bearing on the differential side. Measure the backlash at four opposing points and adjust the nut until a reading of 0.1 to 0.2mm is obtained. Spin the pinion gear several times, then recheck and tighten the bearing caps to the prescribed torque.

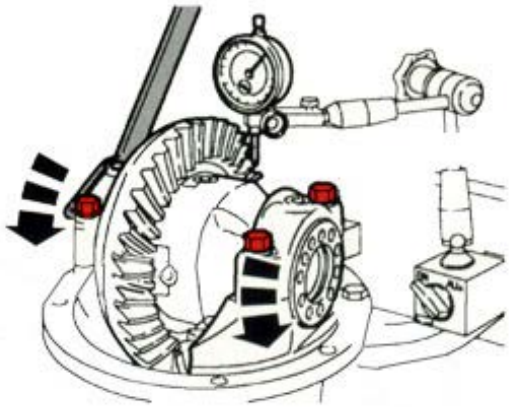

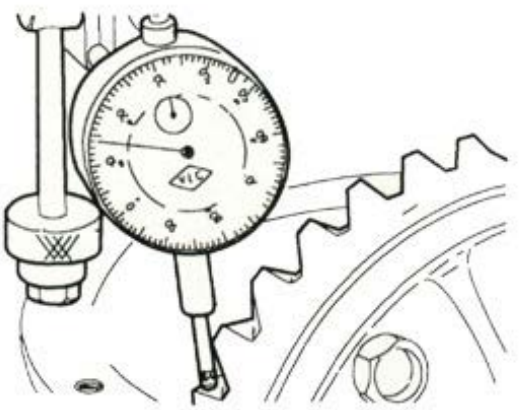

Turning the adjusting nut / Checking the backlash[1]

Tooth Wear Pattern Coat the crown wheel teeth with touch-up paint or 'engineer's blue'. Spin the drive flange several times while braking the crown wheel with a hardwood wedge. Check the wear pattern and adjust the backlash as required within the specified limits as necessary. Fit lock tabs to the main adjusting nuts.

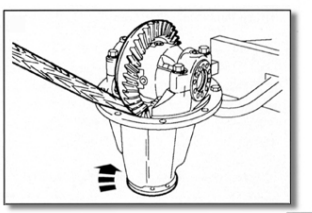

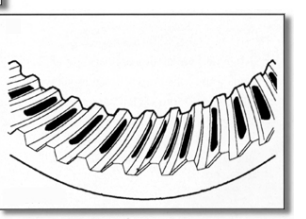

Braking the crown wheel / Ideal contact pattern[1]

Drive Pinion Turning Torque Measure the drive pinion turning torque using a special torque meter. If the reading is incorrect, a new collapsible spacer must be fitted and the pinion nut torque set. Alternatively, shims are used to set the pinion. Refer to the manufacturer's data for specific instructions. Refit the unit to the vehicle and top off with oil. Use new gaskets as required.

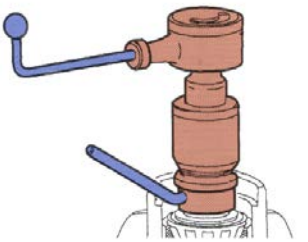

Setting the pinion preload and turning torque[1]

Summary Some repairs require a lot of work. However, do not make any compromises. Keep your customers, and yourself, happy and safe.

Read the previous section again and note down some key bullet points here:

-
-
-
-
-

Faultfinding and Inspections

Introduction The secret to finding faults is to have a good knowledge of the system and to work in a logical way. Use manufacturer's data and recommended procedures. This section includes general faultfinding procedures, and specific ones for clutches.

Check data before starting work

Symptoms and Faults Remember: a symptom is the observed result of a fault. The following four screens each state a common symptom and possible faults.

Clutch Slipping Possible causes of this symptom are:

Clutch worn out.

Clutch adjustment is incorrect.

Oil contamination on the linings.

Consider these and other possibilities when carrying out faultfinding work on a slipping clutch.

Worn clutch disc

Difficult to Change Gear Possible causes of this symptom are:

Clutch out of adjustment.

Clutch hydraulic fault, such as a leak.

Gearbox selectors worn.

Consider these and other possibilities when carrying out faultfinding work on a clutch, which may not be disengaging correctly.

Slave cylinder

Clutch Drag Possible causes of this symptom are:

Clutch out of adjustment.

Pressure plate springs and/or fingers are worn.

Consider these and other possibilities, when carrying out faultfinding work on a clutch, which may be dragging.

Worn clutch fingers

Systematic Testing 💻 Working through a logical and planned systematic procedure for testing a system is the only reliable way to diagnose a problem. Use these six stages of faultfinding as a guide.

Verify the fault

Collect further information

Evaluate the evidence

Carry out further tests in a logical sequence

Fix the problem

Check all systems.

Faultfinding Procedure As an example of how the stages are applied, assume the reported symptom is that the clutch is slipping. The recommended method would be to carry out the procedures outlined on the next five screens.

Check the latest data

Verify the Fault Road test to confirm when the symptoms occur. Alternatively, test the vehicle in the workshop. This procedure is described in the Checking System Performance section. It is important to develop a good idea of exactly what the problem is.

Collect Further Information Look for oil leaking from the bell housing or general area of the clutch. However, external oil leaks would not necessarily affect the clutch. Check the clutch for correct adjustment. If an automatic adjuster is fitted, make sure this is operating correctly.

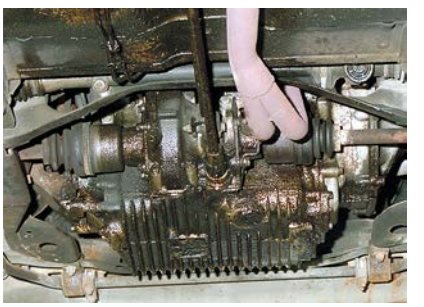
This oil leak is cause for concern!

Evaluate the Evidence At this stage, stop and consider what you know. For example, if no oil leaks are apparent, and if adjustment is correct, the clutch must be examined. If this is the case, the transmission will have to be removed.

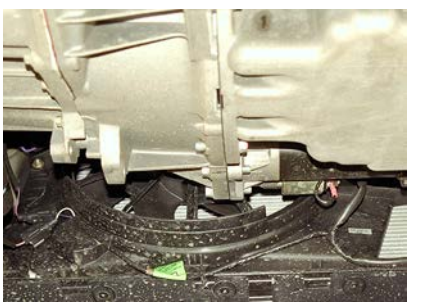
Transmission components

Carry out Further Tests Once the clutch is exposed, further tests can be carried out. If the adjustment was incorrect or oil was noted, check these aspects in more detail. However, following the given example, the clutch assembly must now be removed. A simple visual examination may be all that is required.

Flywheel

Clutch disc

Pressure plate

Release bearing

Rectify the Problem At this stage, parts should be replaced or repaired as necessary. If replacement is required, this is often done with a kit that consists of the clutch plate, cover and a bearing. The transmission system can now be rebuilt.

Clutch repair kit

Check All Systems It is very important, when work has been completed, to check that all systems are operating correctly. It is also important to check that no other problems have been created! Road test and check the operation of the clutch and complete transmission system to make sure everything is in good working order.

Summary Faultfinding work is rewarding – when you find the fault! Remember to always work in a logical way. The stages of faultfinding can be applied to all systems, and that includes the clutch.

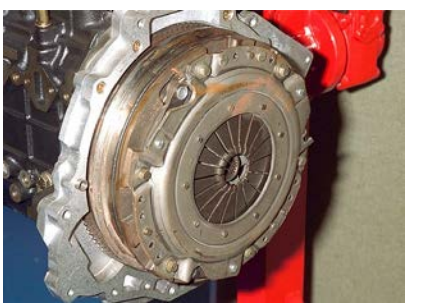
Clutch in position

Noise in a Particular Gear (With Engine Running) Faults that are possible causes of this symptom are:

Damaged gear teeth

Worn bearing

Incorrectly adjusted selection mechanism.

Chipped gear tooth

Noise in Neutral (With Engine Running) Faults that are possible causes of this symptom are:

Gearbox input-shaft bearings are worn (goes away when clutch is pushed down)

Lack of lubricating oil

Clutch-release bearing worn (gets worse when clutch is pushed down).

Input shaft bearing

Difficult to Engage Gears
Faults that are possible causes of this symptom are:

Clutch not releasing correctly

Gear linkage worn or not adjusted correctly

Work synchromesh units

Lack of lubrication.

Gear A selected

Neutral

Gear B selected

Jumps Out Of Gear Faults that are possible causes of this symptom are:

Gear linkage worn or not adjusted correctly

Worn selector forks

Detent not working

Weak synchromesh units.

Detent…

Mechanism

Vibration Faults that are possible causes of this symptom are:

Lack of lubrication

Worn bearings

Mountings loose.

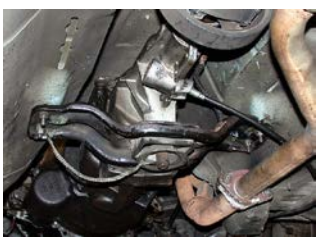
Gearbox mounting

Oil Leaks Faults that are possible causes of this symptom are:

Gaskets leaking

Worn oil seals.

Oil seal

Systematic Testing 💻 Working through a logical and systematic procedure for testing a system is the only reliable way to diagnose a problem. Use these six stages of faultfinding as a guide.

Faultfinding Procedure Working through a logical and systematic procedure for testing a system is the only reliable way to diagnose a problem. Use these six stages of faultfinding as a guide.

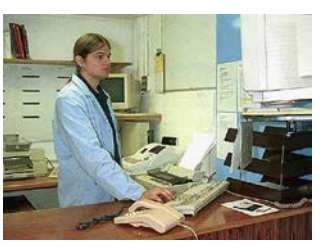
Check the latest data

Verify the Fault Road test the car, with the customer if possible, to recreate the symptoms. Remember, it is not that you don't believe the customer! It is often difficult for a driver to describe symptoms without technical knowledge. It is particularly difficult to narrow down sources of noise! Jumping out of gear usually occurs on acceleration or deceleration.

Collect Further Information Make sure, during the road test, that you drive the car through a variety of conditions. Talk to the customer. Ask, for example, if the problem started suddenly or gradually. Check the feel of the gearshift as it is moved. Look under the car for oil leaks.

A quick check under the car

Evaluate the Evidence Make sure, during the road test, that you drive the car through a variety of conditions. Talk to the customer. Ask, for example, if the problem started suddenly or gradually. Check the feel of the gearshift as it is moved. Look under the car for oil leaks.

Stop and think!

Carry Out Further Tests After a road test, you should have an idea of what is causing the symptoms. Most faults of this type are internal to the gearbox. However, you should be sure before reporting this to the customer. Check the linkage and mountings as described earlier.

Checking the linkage

Fixing the Problem After a road test, you should have an idea of what is causing the symptoms. Most faults of this type are internal to the gearbox. However, you should be sure before reporting this to the customer. Check the linkage and mountings as described earlier.

A new gearbox being fitted!

Only a new spring needed!

Check All Systems It is possible, when fixing one fault, to accidentally cause a new problem. It is also possible that another fault exists, and it may appear to the customer that you have caused it! For both of these reasons, check that ALL systems work correctly after any repairs have been carried out.

A quick check of all systems

Vibration Possible problems that could produce this symptom are:

Incorrect alignment of propshaft joints
Worn universal or constant-velocity joints
Bent shaft
Driveshaft out of balance

Mountings worn.

Propshaft center bearing mounting

Grease Leaking Possible problems that could produce this symptom are:

Gaiters split
Clips loose

Universal joints overheating.

CV gaiter

Knocking Noises Possible problems that could produce this symptom are:

Dry universal or constant-velocity joints.

Worn constant-velocity joints (gets worse on tight turns).

Universal joint

No Drive Possible problems that could produce this symptom are:

Broken driveshaft or propshaft
A problem with the transfer box selector or gear

Splined joint rounded off.

Splines on a driveshaft

Systematic Testing 💻 Working through a logical and systematic procedure for testing a system is the only reliable way to diagnose a problem. Use these six stages of faultfinding as a guide.

Verify the fault
Collect further information
Evaluate the evidence
Carry out further tests in a logical sequence
Fix the problem

Check all systems.

Faultfinding Procedure As an example of how the stages are applied, assume the reported symptom is a rumbling noise. Carrying out the procedures, outlined over the next five screens, would be a recommended method.

Check the latest data

Verify the Fault Road test the car, with the customer if possible, to check the symptoms. Remember, it is not that you don't believe customers. Instead, it is often difficult for them to describe symptoms without technical knowledge.

Collect Further Information Make sure, during the road test, that you drive the car through a variety of conditions. For example, make sharp and long turns in both directions. Drive at low speeds and at high speeds. Also talk to the customer, for example, ask if the noise started suddenly or gradually.

Talk to the customer if possible

Evaluate the Evidence Remember at this point to stop and think! If the noise has developed slowly, it may suggest a component such as a wheel bearing is wearing out. If the noise is noticeable all the time but worse on turning, it may help you to decide which bearing is at fault. Note however, that noisy bearings sometimes run quietly, when loaded on turns.

Stop and think!

Carry out Further Tests Jack up the car and support it on stands or use a wheel-free hoist if available. Spin each wheel in turn and listen for noise. Rock the wheel in and out at the top to check for bearing movement. It may also be necessary to run the wheels.

Checking the bearing freeplay

Fix the Problem Once the suspect bearing has been identified, it must be replaced. Follow manufacturers' instructions for this task. Make sure that the new parts used are of good quality.

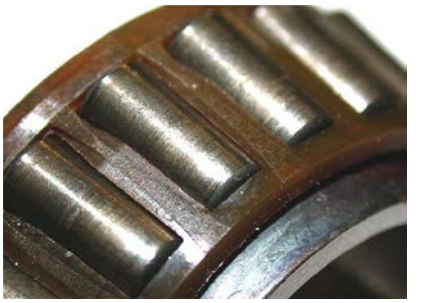

Damaged wheel bearing

Check All Systems It is possible, when fixing one fault, to accidentally cause a new problem. It is also possible that another fault exists, and it may appear to the customer that you have caused it! For both of these reasons, check that ALL systems work correctly after any repairs have been carried out.

CV gaiter

Rumbling or Whining Noise Faults that are possible causes of this symptom are:

Low oil level

Incorrect pre-load adjustment

Bearings worn

Worn differential gears.

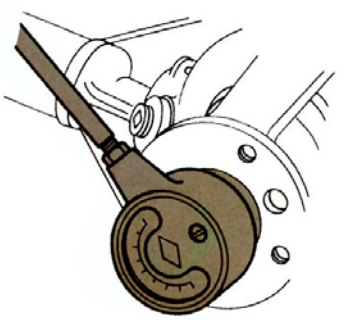

Checking the torque required to move the pinion[1]

Oil Loss Faults that are possible causes of this symptom are:

Gaskets split

Drive shaft oil seals

Final drive output bearings worn (drive shafts can drop and cause leaks).

Checking the final drive output bearings and seals

Poor Handling Faults that are possible causes of this symptom are:

Traction control not operating

Limited slip differential not allowing enough slip

Bearings seized.

Traction control throttle actuator

Systematic Testing Working through a logical and planned systematic procedure for testing a system is the only reliable way to diagnose a problem. Use these six stages of fault finding as a guide.

Verify the fault

Collect further information

Evaluate the evidence

Carry out further tests in a logical sequence

Rectify the problem

Check all systems.

Faultfinding Procedure As an example of how the stages are applied, assume the reported symptom is a humming noise from the rear of the vehicle. Carrying out the procedures, outlined over the next five screens, would be a recommended method.

Check the latest data

Verify the Fault Road test the car, with the customer if possible, to check the symptoms. Remember, it is not that you don't believe the customer! It is often difficult for them to describe symptoms without technical knowledge. It is particularly difficult to narrow down sources of noise!

Collect Further Information Make sure that you drive the car through a variety of conditions. Sharp and long turns in both directions for example. Drive at low speeds and high speeds. Also, talk to the customer; for example, ask if the noise started suddenly or gradually.

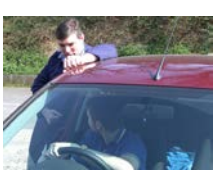

Talk to the customer if possible

Evaluate the Evidence Remember at this point to stop and think! If the noise has developed slowly, it may suggest a component such as a wheel bearing is wearing out. If the noise is noticeable all the time but worse on cornering, it may help you decide if a wheel bearing is at fault. Alternatively if cornering does not make any difference the bearings in the final drive or the crown wheel and pinion may be worn.

Stop and think!

Carry out Further Tests Jack up the car and support it on stands, or use a wheel-free hoist if available. Spin each wheel in turn and listen for noise. Run the vehicle on a wheel-free ramp and listen for noises. Check for oil leaks, as this may be an indicator of other problems. In some cases, removing the propshaft and running the transmission is a useful test.

Rectify the Problem Once the suspect component has been identified, it must be replaced. Follow manufacturers' instructions for this task. Make sure that the new parts used are of good quality.

Crown wheel/Ring gear and differential

Check All Systems It is possible, when fixing one fault, to accidentally knock something and cause a new problem. It is also possible that another fault exists, and it may appear to the customer that you have caused it! For both of these reasons, check that ALL systems work correctly when any repairs have been carried out.

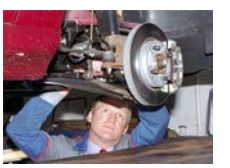

Inspect all of the transmission system

Summary Faultfinding work is rewarding – when you find the fault! Remember to always work in a logical way. The stages of faultfinding can be applied to all systems.

288. **Additional Worksheet** Inspect and reinstall limited slip differential clutch components

Read the previous section again and note down some key bullet points here:

-
-
-
-
-

Additional Automotive Materials

Introduction to Low Carbon Technologies

Low carbon technologies

Introduction This section is about low carbon technologies and the environment. We will cover driving styles, how carbon emissions can be reduced, different exhaust emissions, and parts of a vehicle that can be recycled. Later sections will examine electric vehicles and other modern ways of producing less environmental damage.

The term 'carbon' is used because all fossil fuels such as petrol and diesel are made of hydrogen and carbon, which is also why they are often called hydrocarbon fuels.

Figure 0-1 An exhaust gas oxygen sensor is one way to reduce emissions

Figure 0-2 A Catalytic converter helps to reduce emissions

Driving styles Examples of driving styles that harm the environment are:

- Excessive acceleration
- Excessive deceleration
- Driving at high speed
- Idling engine whilst stopped
- Incorrect gear selection
- Use of auxiliary equipment e.g. air conditioning

If you improve your driving in this way you not only protect the environment, you will save a fortune on fuel! Watch the road test video presented here and note where the driving style could be improved to save fuel.

How to reduce carbon emissions Here are some further ways in which carbon emissions can be reduced when travelling:

- Carefully planned routes
- Use motor transport less- walk, cycle
- Car sharing
- Use public transport
- More efficient vehicles- lower engine size, alternative fuel vehicles
- Correctly inflated tyres
- Properly serviced and maintained vehicles
- Do not carry excessive loads e.g. empty vehicle boot
- Keep windows closed to reduce drag

If you take the time to put these into practice you will save on fuel and help reduce your carbon emissions.

Figure 0-3 New Routemaster bus

Figure 0-4 Old Routemaster bus

Carbon Footprint The carbon footprint relating to a motor vehicle can be defined as:

The amount of greenhouse gases, most commonly carbon dioxide and methane, produced over the life time of a vehicle. This includes the vehicle's manufacture, running time and disposal at the end of its working life.

Our personal carbon footprint is a measure of the impact our activities have on the environment, and in particular climate change. It relates to the amount of greenhouse gases produced in our day-to-day lives through burning fossil fuels for electricity, heating and transportation etc.

The carbon footprint is a measurement of all greenhouse gases we individually produce and is usually given in tonnes (or kg) of carbon dioxide equivalent.

Figure 0-5 Carbon footprint

Recycling Recycling is an important way of reducing waste and emissions. The common vehicle parts that may be recycled are:

- Metals
- Plastics
- Oils
- Other fluids e.g. brake fluid and antifreeze
- Batteries
- Refrigerant from air conditioning systems
- Glass
- Tyres

Ensure you follow the procedures set out by your company as well as local and national regulations.

Figure 0-6 The three R's

New types of propulsion There are many new types of propulsion system that are already in use, or will be used in future vehicles. They each have a number of benefits as shown on each image of this screen. These systems will be examined in more detail in later sections.

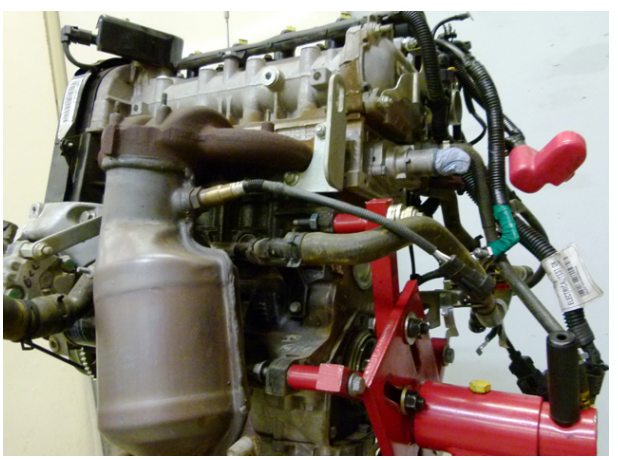

Figure 0-7 Low emission conventional engine e.g. lean burn or reduced capacity turbocharged - improvement on normal engines but not vastly

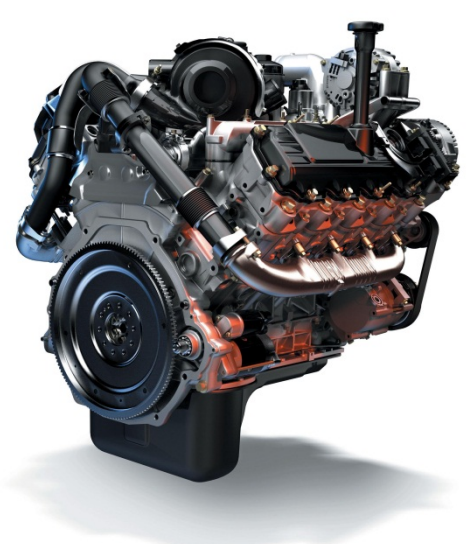

Figure 0-8 Alternative fuels including LPG and bio-fuel engines - normally uses a mixture of normal fuels and gas, or fuels produced from vegetable or plant extracts resulting in reduced engine emissions, renewable, and less processing required than crude oil

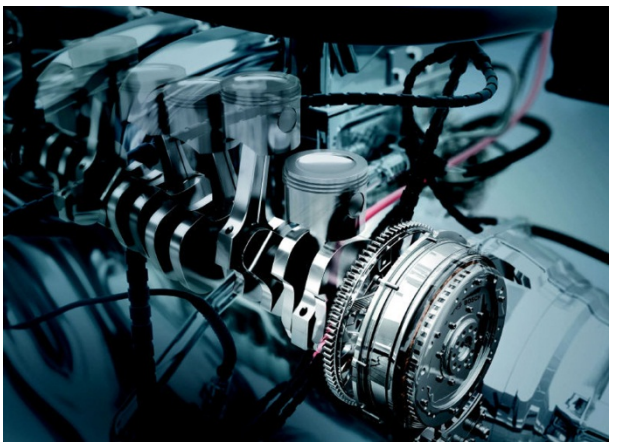

Figure 0-9 Hybrid vehicles using a combination of power sources such as conventional engine and electric motors - resulting in reduced emissions, improved fuel consumption

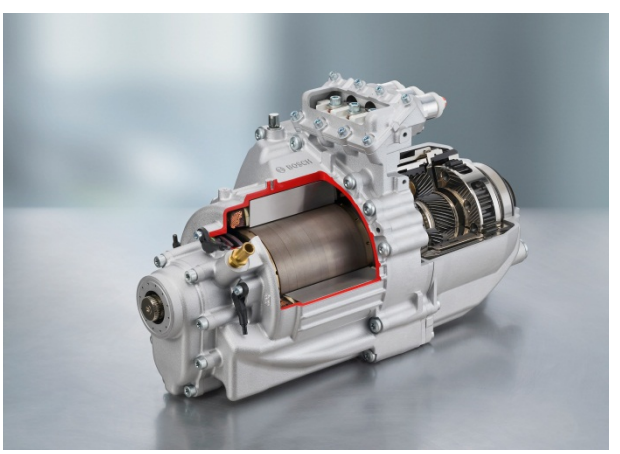

Figure 0-10 Electric vehicles using solely electric motors to propel the vehicle - zero emissions and low running cost but expensive at present and some have limited range. Expected to increase in numbers considerably over the next few years

Look back over the previous section and write out a list of the key bullet points here:

Air Pollution from motor vehicles

Introduction Atmospheric pollution has become a serious problem to the health of people and to the environment. Many urban areas are now heavily polluted, with people suffering medically from the effects of vehicle exhaust pollution.

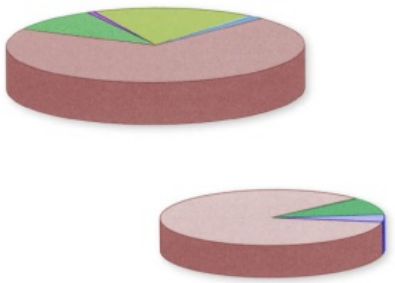

Figure 0-11 Composition of exhaust – add the figures

Fossil Fuels There have been many changes in climatic conditions in the world. Many of these have occurred over a long period and animals and plants have adapted to the changes naturally. However, the rapid burning of fossil fuels during this century has increased carbon-dioxide levels in the atmosphere.

Vehicle designs are concentrating on weight reduction, aerodynamics, reducing rolling resistance, and on fuel-efficient engines. Alternative fuel sources to reduce fossil-fuel usage and to conserve the world's stock of these fuels have also been developed.

Figure 0-11 Ford Prodigy - Hybrid vehicle

Carbon Dioxide Carbon dioxide allows the sun's heat in, but reduces the ability of the heat to radiate outward, causing the Earth to warm up. Many studies of the warming process indicate that the rate of Earth warming is increasing too quickly and preventing animals and plants from adapting. During the history of the Earth, rapid changes like this have caused the extinction of some species of animals and plants.

Weather Patterns As a result of warming, weather patterns change. Arid areas become wet and wet areas become dry. Drought conditions become common in heavily populated areas and other areas suffer severe flooding. Because the distribution of populations and agricultural production are linked, they end up in the wrong climatic conditions. The consequences are severe shortages of water and poor agricultural production.

Ozone Layer A layer of ozone in the stratosphere filters harmful radiation. Ozone, or trioxygen (O_3), is a form of oxygen with 3 oxygen atoms. Vehicle emissions and other industrial chemicals, such as the CFCs used in refrigeration, air-conditioning and aerosols, rise up into the stratosphere and chemically combine with the ozone. This causes it to break down into less beneficial substances. The deterioration of the ozone layer allows an increase in the harmful radiation that reaches the Earth's surface, which can cause skin and other cancers.

Environmental Regulations Environmental regulations are now in place to find safer alternatives, or to reduce the production and use of the most harmful pollutants. Other regulations and agreements are seeking to reduce the production

of carbon dioxide by improving the efficiency of fossil-fuel burners. For retaining the energy produced, improvements will also be introduced, such as the use of insulation and other methods.

Lead Lead has, until recently, been used as an additive in petrol in order to slow down the combustion process. This was to eliminate knocking or pinking in the engine. It made engines more efficient but the lead did not burn and was, instead, passed into the atmosphere from the exhaust and produced airborne concentrations that were capable of causing many physical disabilities, including brain damage.

For this reason, lead additives are no longer used and modern engines are now designed to run on lead-free fuel. There may be a small portion of naturally occurring lead in some fuels but, because this is very low, the description 'lead-free' is more precisely a statement that lead additives have not been used.

Sulphur Another naturally occurring substance in fossil fuels, particularly diesel, is sulphur. This does not burn but, during combustion, chemically reacts with oxygen in the air to form sulphur dioxide (SO_2). This passes from the engine exhaust into the atmosphere where it combines with water to form sulphuric acid (H_2SO_4) and falls back to earth as acid rain, which destroys trees, plants, other vegetation and aquatic life in streams, rivers and lakes. Fuel suppliers remove, or reduce, the amount of sulphur during the refining process.

Nitrogen Oxides Air consists of approximately 80% nitrogen which, under normal circumstances, is an inert gas. An inert substance is one that has very little chemical reaction and does not burn, or mix easily, with other chemicals. Nitrogen, however, will mix with oxygen in high temperatures to form nitrogen oxides (NO_x). These combine in exceptional geographical and meteorological conditions to form smog, acids and increases in low-level ozone. This serves to make a very unpleasant atmosphere in which to live. Many respiratory and asthmatic fatalities occur under these conditions.

Combustion The combustion of fuel inside the engine is a chemical process that combines the carbon and hydrogen in the fuel with oxygen in order to release energy. Slightly less than 20% of air is made up from oxygen. Complete combustion produces carbon dioxide (CO_2) and water (H_2O). Neither of these is directly harmful. Both are naturally occurring substances in large concentrations in the atmosphere. However, carbon-dioxide concentrations are increasing and contributing to the greenhouse effect.

Incomplete Combustion Incomplete combustion leaves some of the carbon and oxygen not fully combined. The product of this is carbon monoxide (CO), which is toxic. Small quantities of carbon monoxide molecules are dangerous because they attach themselves to red blood cells. This reduces the oxygen that the cells normally carry around the body. The result is oxygen deprivation, brain damage and fatality.

Unburnt Fuel Another product of incomplete combustion is particles of fuel that have not been burnt. These are carried, with the exhaust gases, into the atmosphere and are called unburnt hydrocarbons (HC). Very small amounts of hydrocarbons in the atmosphere can cause respiratory problems.

Engine Oil Engine oil drawn into the combustion chamber, either from the inlet valve stem, or by bypassing the pistons, can also be sources of hydrocarbon pollution. Oil vapours form in the engine crankcase and can escape into the atmosphere. A positive crankcase ventilation system is now used to draw the vapours into the engine so that they are burnt to form water and carbon dioxide.

Evaporative Emissions Previously, vapour in the tank was directly vented to the atmosphere. This is no longer the case, but the fuel tank must still be vented to the atmosphere to allow air to flow into the tank as fuel is used. A charcoal filter is now used to prevent the loss of fuel vapour and for the expansion of the fuel when the weather is hot. The fuel vapour in the charcoal canister is drawn into the engine and burnt.

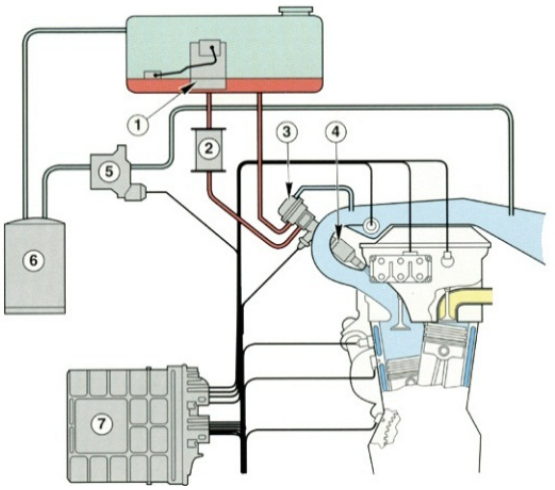

Figure 0-12 Emission-control system

Air-Fuel Ratio Good fuel economy is obtained with a lean air-to-fuel mixture. However, this mixture produces higher combustion temperatures and greater risks of nitrogen oxides being formed. In order to prevent, or reduce to a minimum, the formation of nitrogen oxides, the combustion temperature has to be kept as cool as possible and the amount of oxygen limited to match the quantity of fuel delivered.

Exhaust Gas In order to reduce the amount of oxygen in the air charge, a gas that is low in oxygen can be introduced. This maintains the total air-charge mass to give good compression pressures and efficient operation of the engine. The available gas is the exhaust gas that has already used up its oxygen content during combustion. The addition of a regulated charge of exhaust gas reduces the oxygen content of the new charge to suit the amount of fuel delivered. This in turn reduces the combustion temperature and limits the formation of nitrogen oxides. The catalytic conversion of any remaining harmful gases can give a clean exhaust gas.

Look back over the previous section and write out a list of the key bullet points here:

Electric vehicles (EVs)

Introduction I have chosen the Tesla Roadster EV as a case study because of its world-class acceleration, handling, and design. It is a cool sports car that also happens to be an electric car – which is a major step forward in perception. It is also a pure EV in that it uses rechargeable batteries (i.e. not methanol or hydrogen fuel cells).

I am grateful to Tesla Motors, for permission to use their materials.

Figure 0-13 Tesla Roadster – available in several colours including racing green! (Source: Tesla Motors)

Motor The Roadster is powered by a 3-phase AC induction motor. Small, but strong, the motor weighs just over 52 kg (115 lbs). The batteries produce 375 V to push up to 900 A of current into the motor to create magnetic fields. It delivers 288 peak hp and 400 Nm (295 lbs-ft) of torque at the driver's command. At top speed, the motor is spinning at 14,000 rpm.

The motor is directly coupled to a single speed gearbox, above the rear axle. The simplicity of a single gear ratio reduces weight and eliminates the need for complicated shifting and clutch work. The car does not need a complicated reverse gear - the motor simply spins in the opposite direction.

Figure 0-14 Tesla's AC induction motor (Source: Tesla Motors)

Efficiency The internal combustion (IC) engine is a complex, amazing machine. Unfortunately, this complexity results in wasted energy. At best, only about 30% of the energy stored in fuel is converted to forward motion. The rest is wasted as heat and noise. When the engine is not spinning, there is no torque available. In fact, the engine must turn at several hundred rpm (idle speed) before it can generate enough power to overcome its own internal losses.

An IC engine does not develop peak torque until many thousand rpm. Once peak torque is reached, it starts to drop-off quickly. To overcome this narrow torque range, multi-speed transmissions are employed to create gear ratios that keep the engine spinning where it is most effective.

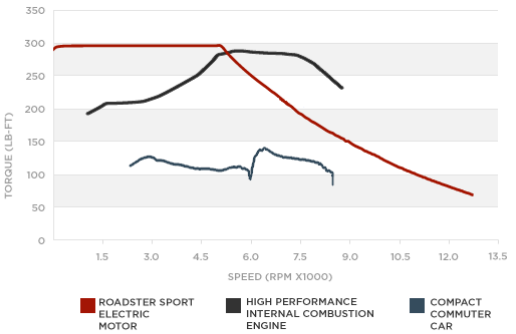

Figure 0-15 IC engine torque vs. and electric motor

Motor control When the accelerator pedal is pressed, the power electronics module (PEM) interprets a request for torque. Flooring the pedal means a request for 100% of the available torque. Half-way is a request for partial torque and so on. Letting off the accelerator pedal means a request for re-generation. The PEM interprets the accelerator pedal input and sends the appropriate amount of alternating current to the stator. Torque is created in the motor and the car accelerates.

Figure 0-16 Power electronics module

Battery The battery pack in the Tesla Roadster is the result of innovative systems engineering and 20 years of advances in Lithium-ion battery technology. The pack contains 6,831 lithium ion cells and is the most energy dense pack in the industry, storing 56 kWh of energy. It weighs 990 lbs and delivers up to 215 kW of electric power. The car will charge from almost any 120 V or 240 V outlet. Most Roadster owners find they rarely use a complete charge, and charging each night means their car is ready to drive 245 miles each morning.

The pack enclosure is designed to withstand substantial abuse in the vehicle, while maintaining the integrity of the internal components.

Figure 0-17 Battery pack in production (Source: Tesla Motors)

Charging The battery charger is located on-board the car. This means the Roadster can be plugged into any outlet, anywhere in the world. Charge times vary based on the outlet voltage and amperage. With the Tesla high power wall connector, a Roadster charges in as little as 4 hours from empty. Most owners however simply charge overnight.

Figure 0-18 Charging port and coloured indicator

Vehicle management system The vehicle management system (VMS) compiles information from many other processors to coordinate the necessary actions for driving. When the key is inserted into the car, the VMS turns on the touchscreen. When the key is switched to the ON position, it readies the car for driving by instructing other processors to initiate their functions. It computes available range and prepares the PEM to send power to the motor from the battery. The VMS manages the driving modes (performance, standard, or range) and works with the battery processor to charge and discharge appropriately. It computes ideal and actual range using a complex algorithm that considers battery age, capacity, driving style, and energy consumption rate.

Figure 0-19 Central control touch screen (Source: Tesla Motors)

Summary All in all, a super sports car with a range that makes it completely useable under 'normal' conditions. Even the colours are good; personally I prefer the Racing Green version. Dear Tesla Motors, please send me a free car in this colour in return for this publicity…

More information about Tesla Motors from: http://www.teslamotors.com/

Figure 0-20 Tesla Roadster (Source: Tesla Motors)

Hydrogen electric vehicles (HEVs)

Introduction I have picked the Honda FCX Clarity zero-emissions hydrogen fuel cell electric vehicle (EV) as a case study because it has been in development for a while, and it is now at a mature technological level. Some innovate techniques are used and the result is a very useable ZEV.

I am grateful to Honda, for permission to use their materials.

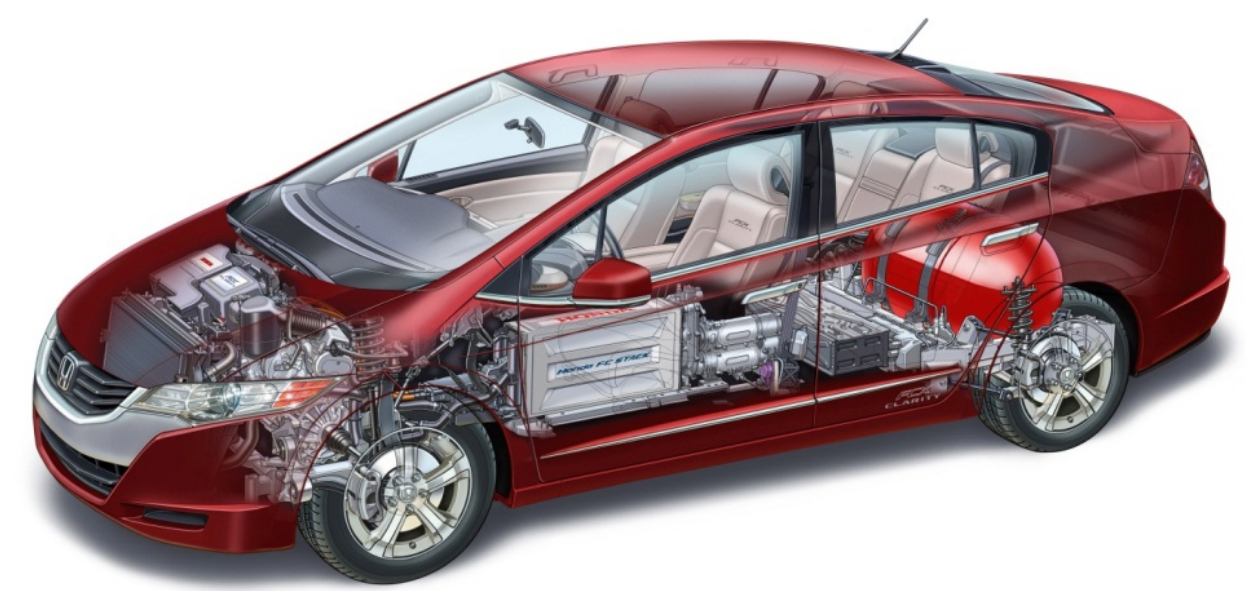

Figure 0-21 Honda FCS Clarity 2011 (Source: Honda Media)

Main features To give an overview of the vehicle, some of the main features are shown here:

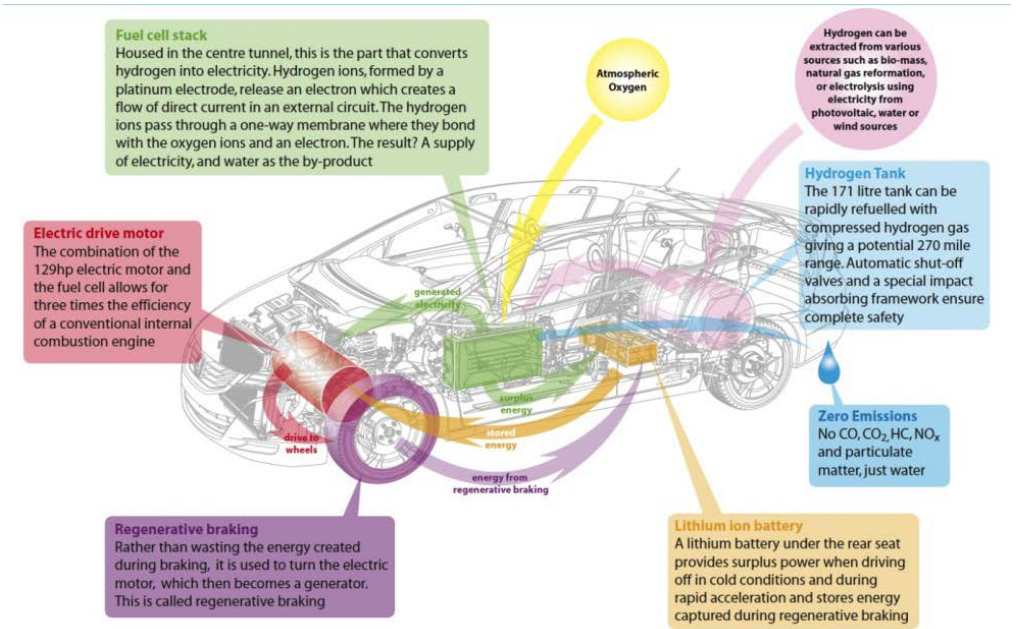

Figure 0-22 Honda FCX Clarity features and operation (Source: Honda Media)

Fuel cell vehicles A fuel cell vehicle has a hydrogen tank instead of a petrol/gasoline tank. In the fuel cell, hydrogen is combined with atmospheric oxygen to generate electricity. The fuel cell is really a tiny electric power station, and generates its own electricity on-board rather than through a plug-in system.

Since the electricity required to power the vehicle's motor is generated on-board using hydrogen and oxygen, no CO_2 or other pollutants are emitted in this process. The only emission is the water produced as a by-product of electricity generation.

A compact and efficient lithium ion battery stores electricity generated during braking and deceleration by regenerative braking (just like a mild hybrid). The battery works with the fuel cell stack to power the vehicle.

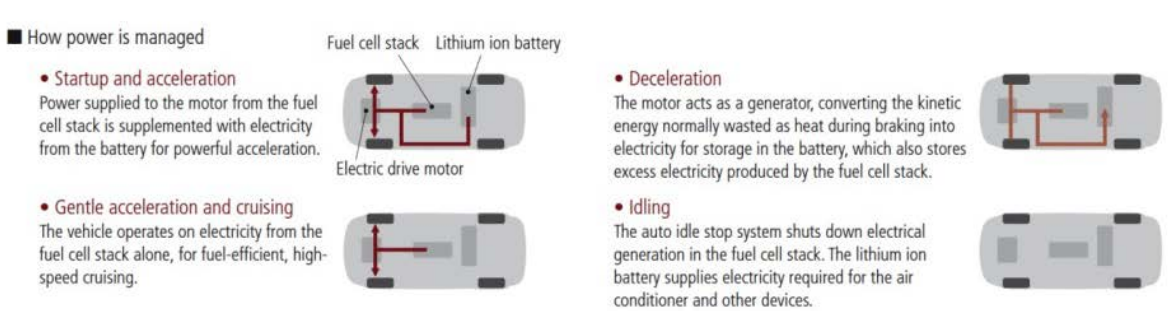

Figure 0-23 Power management (Source: Honda Media)

Figure 0-24 Power management (Source: Honda Media)

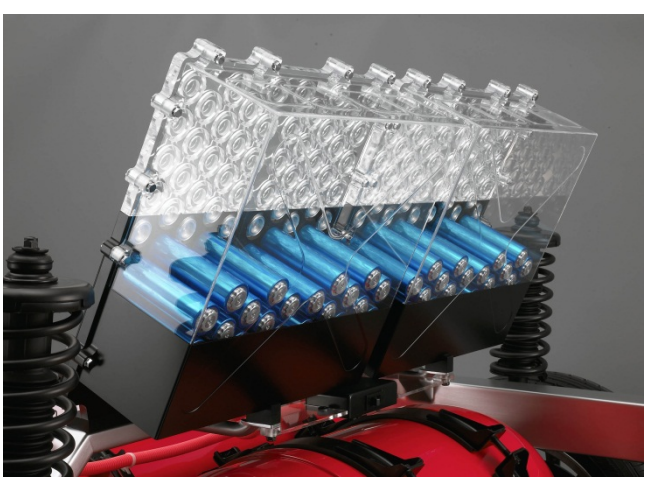

Figure 0-25 Power management (Source: Honda Media)

Other advantages As well emitting no harmful exhaust gases, fuel cell electric vehicles offer good driving range, short refuelling time and a flexible layout and design:

- Short refuelling time of 3-5 minutes
- Vehicle range of 270 miles, comparable to that of a conventional car
- Performance similar to a current mid-size car
- Zero harmful emissions or pollutants

Figure 0-26 FCX instruments

Hydrogen Hydrogen can be produced from renewable sources such as solar, wind or hydroelectric power (using electrolysis to extract hydrogen from water). Certain production methods are better suited in different areas of the world, but nevertheless it is possible to achieve a stable supply of hydrogen from renewable energy sources.

Currently, the most common way of producing hydrogen is steam reforming from natural gas. There is an environmental cost of extracting hydrogen in this way, but it is the most widely available approach. However, the same issue applies to battery electric vehicles (BEV). There is clearly an environmental cost of a BEV running on electricity made from a coal- or gas-fired power station.

Figure 0-27 Hydrogen station

Hydrogen storage Honda uses hydrogen as a compressed gas because, in simple terms, more gas will fit in the tank that way. However, the tanks have to be able to cope with the pressure and it does require energy to compress the gas in the first place. Some critics say this compression process reduces the margin on zero-emission driving. However, Honda has made a number of developments in this area to ensure the car is still as efficient as possible.

The high-capacity hydrogen tanks use a newly-developed absorption material to increase the amount of hydrogen they can store. This means it is not necessary to compress it to such a high degree to fit it in the tank,

again saving energy at the compression stage. The high-capacity hydrogen tanks are so effective that the hydrogen can be compressed to 350bar, compared to other fuel cell cars that use hydrogen compressed to 750bar.

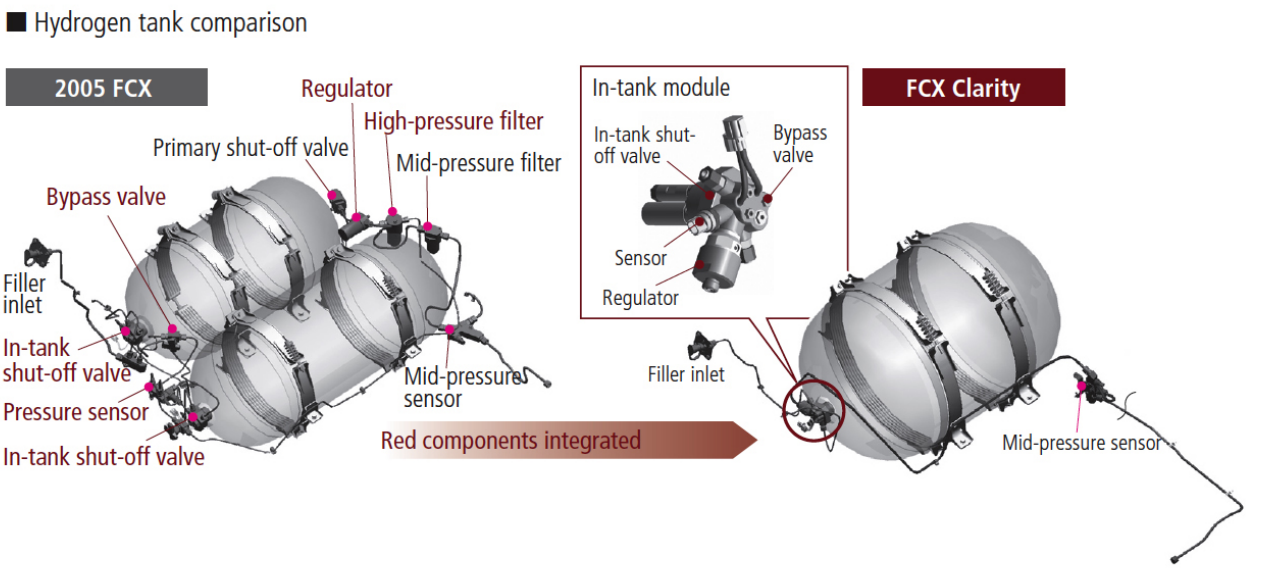

Figure 0-28 Hydrogen tanks

Figure 0-29 Under the 'hood'

Energy efficiency and the environment Because the FCX Clarity has an efficient powerplant and energy management it has an efficiency rating of around 60%. The image on this screen shows a comparison between different types of car in this respect.

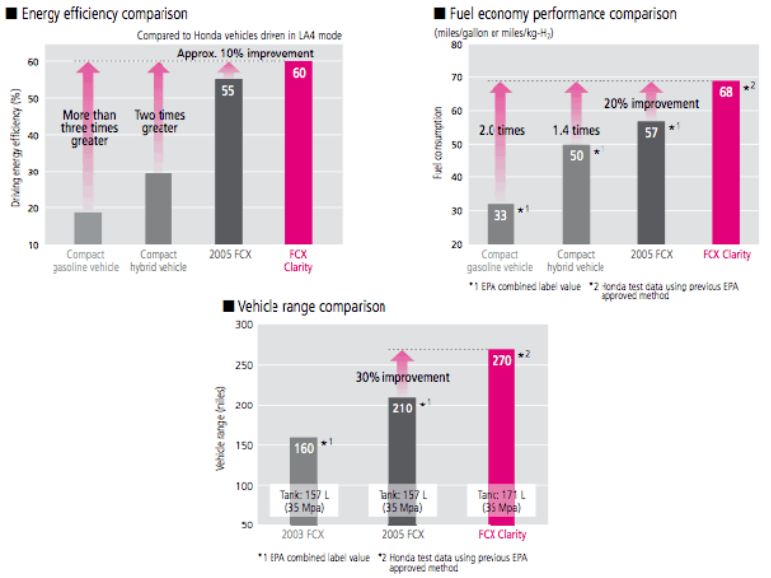

Figure 0-30 Energy efficiency comparison (Source: Honda Media)

Hydrogen cycle The ideal hydrogen cycle uses renewable energy sources, such as solar, wind or hydro, to extract hydrogen from water via electrolysis. The water produced as a by-product of the fuel cell process would then return to the rivers and oceans before once again being converted into hydrogen via electrolysis.

In a fuel cell, hydrogen is converted into electricity on demand, so just the right amount of electricity is produced. Using hydrogen to create electricity removes the challenge of storing it in large quantities in batteries.

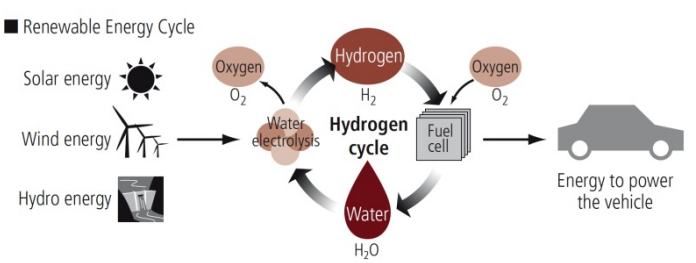

Figure 0-31 Renewable energy cycle (Source: Honda Media)

Drive motor The drive motor configuration delivers powerful acceleration and a high top speed, along with a quieter, more luxurious ride. The new rotor and stator (stationary permanent magnets) feature a combined reluctance torque, low-loss magnetic circuit and full-range, full-digital vector control to achieve high efficiency and high output over a wide speed range.

The innovative shape and layout of the magnets in the rotor result in high-output, high-torque, high-rpm performance. These innovations deliver a maximum output of 100 kW along with impressive torque and power output density. At the same time, resonance points in the high-frequency range have been eliminated for quieter operation.

Figure 0-32 induction drive motor, differential and final drive components (Source: Honda Media)

Safety Sensors are located throughout the vehicle to provide a warning in the unlikely event of a hydrogen leak. If a leak occurs, a ventilation system is activated and an automatic system closes the main cut-off valves on the hydrogen tanks or supply lines.

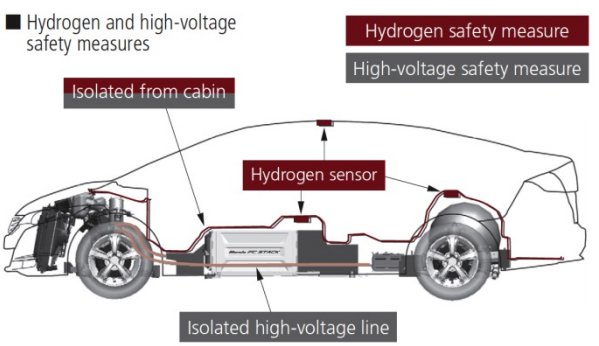

Figure 0-33 Hydrogen and high voltage safety measures (Source: Honda Media)

Refuelling During refuelling, to prevent reverse flow from the tank, the hydrogen filler inlet has an integrated check valve. The fuel intake mechanism is also designed to prevent contamination by other gases or the connection of nozzles designed for hydrogen at incompatible pressure levels.

Figure 0-34 Fuelling pipe connection (Source: Honda Media)

Look back over the previous section and write out a list of the key bullet points here:

Hybrid vehicles (HVs)

Overview A hybrid power system for an automobile can have a series, parallel or power split configuration. With a series system, an engine drives a generator, which in turn powers a motor. The motor propels the vehicle. With a parallel system, the engine and motor can both be used to propel the vehicle. Most hybrids in current use employ a parallel system known as Integrated Motor Assist (IMA). The power split has additional advantages but is also more complex.

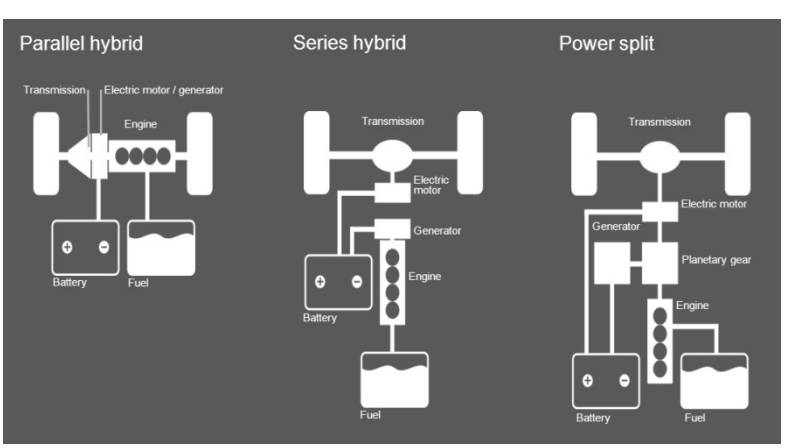

Figure 0-35 Three types of hybrid vehicles

Integrated Motor Assist (IMA) The IMA method is a technologically advanced parallel hybrid power system. By employing techniques such as brake-energy regeneration to maximize the efficiency with which energy is used, it

combines low-pollution, low-cost operation with high levels of safety and running performance. The main components of the system are:

- IMI motor
- Battery module
- Power drive unit (PDU)
- Motor control module (MCM)
- DC-DC converter

✍ Sketch the component layout here

Power split The Toyota Prius, for example, uses a splitting device that effectively allows a combination of series and parallel systems. The three main operating conditions are:

- The high voltage battery provides power to motor 2 to drive the wheels.
- When the wheels are driven by the engine via the power splitting device, generator 1 is also driven via the planetary gears to supply electricity to motor 2 to drive the wheels.
- When the vehicle is decelerating, kinetic energy from the wheels is recovered, converted into electrical energy and used to recharge the battery by means of motor/generator 2.

✍ The Toyota Prius system

Power splitter This device is an epicyclic gearbox that transmits mechanical power between the Engine-Motor-Generator system.

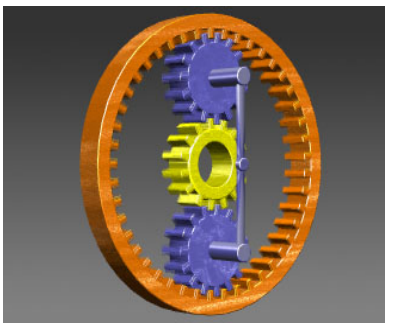

Figure 0-36 The splitter is a epicyclic gearbox

Operating modes There are five main IMA operating modes:

- Start-up
- Acceleration
- Cruising
- Deceleration
- Idling

The diagram shown here as image 1 and the chart shown as image 2, gives an overview of each mode.

The following screens explain each mode in more detail.

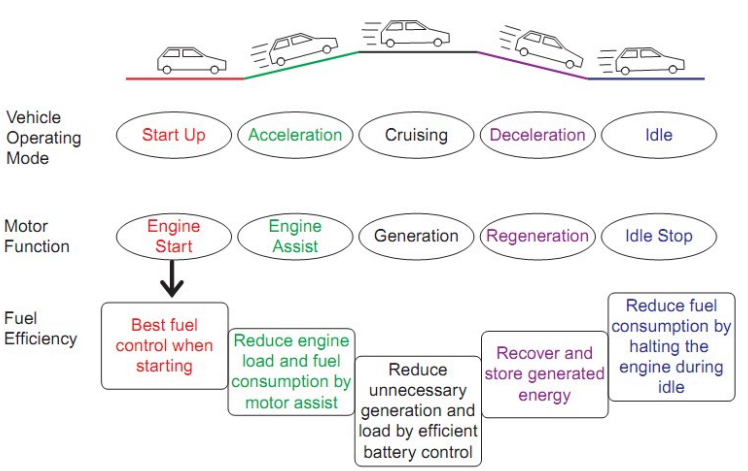

Figure 0-37 Operating conditions

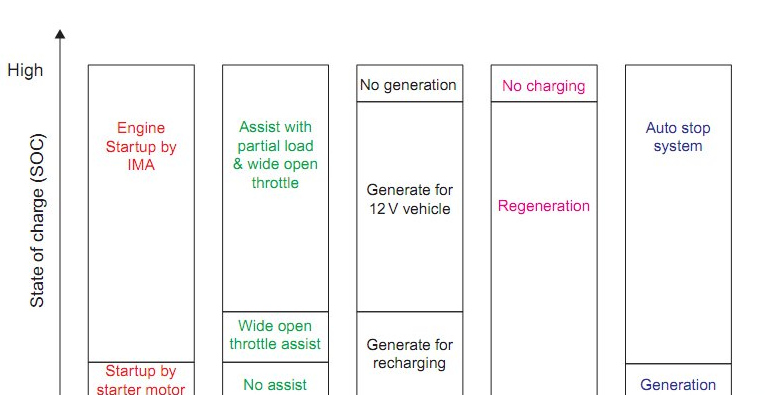

Figure 0-38 IMA operating details

Engine start-up Under normal conditions, the IMA Motor will immediately start the engine at a speed of 1000 rev/min. When the state of charge (SOC) of the high voltage battery module is too low, when the temperature is too low, or if there is a failure of the IMA system, the engine will be cranked by the normal 12V starter motor.

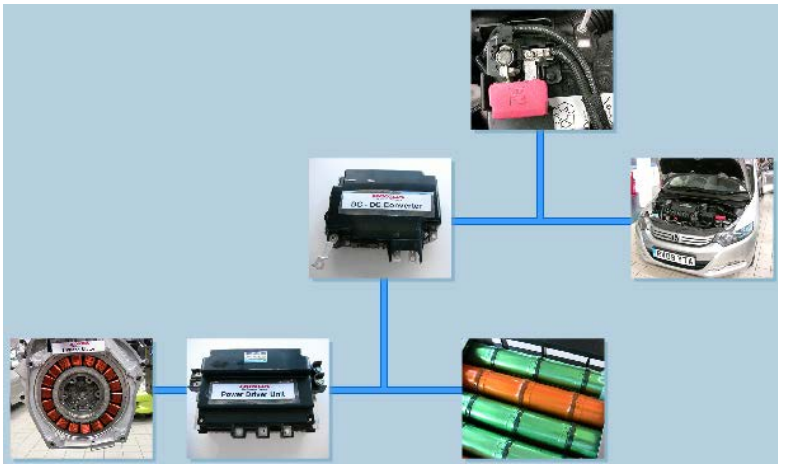

Figure 0-39 Current flow – engine start up

✍ Add arrows to show direction of current flow

Acceleration During acceleration, current from the battery module is converted to AC by the power drive unit (PDU) and supplied to the IMA motor, which functions as a motor. The IMA motor output is used to supplement the engine output so that power available for acceleration is maximized. Current from the battery module is also converted to 12V DC for supply to the vehicle electrical system. This reduces the load that would have been caused by a normal alternator and so improves acceleration.

When the remaining battery module state of charge is too low, but not at the minimum level, assist will only be available during wide open throttle (WOT) acceleration.

When the remaining state of charge is reduced to the minimum level, no assist will be provided. The IMA system will generate energy only to supply the vehicles 12V system.

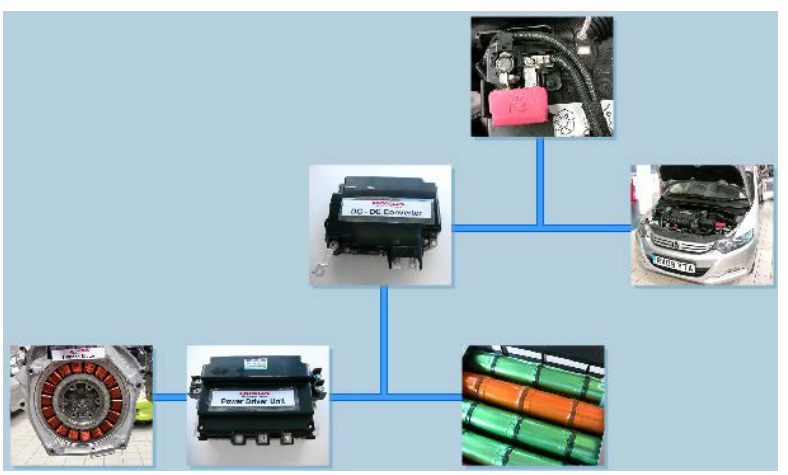

Figure 0-40 Current flow – accelerating

✍ Add arrows to show direction of current flow

Cruising When the vehicle is cruising and the battery module requires charging, the engine drives the IMA Motor, which now acts as a generator. The resulting output current is used to charge the battery module and is converted to 12V DC to supply the vehicle electrical system.

When the vehicle is cruising and the high-voltage battery is sufficiently charged, the engine drives the IMA motor. The generated current is converted to 12V DC and only used to supply the vehicle electrical system.

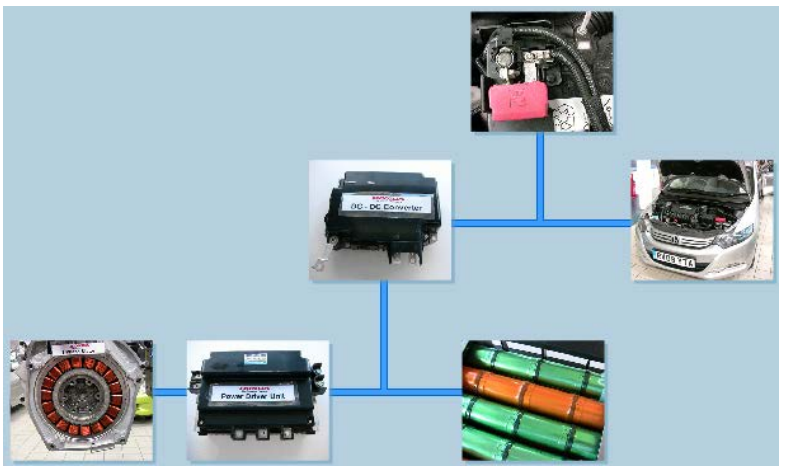

Figure 0-41 Current flow - cruising

✍ Add arrows to show direction of current flow

Deceleration During deceleration (during fuel cut), the IMA motor is driven by the wheels such that regeneration takes place. The generated AC is converted by the power drive unit (PDU) into DC and used to charge the battery module. The DC output of the PDU is also applied to the DC-DC converter which reduces the voltage to 12V, which is supplied to the vehicle electrical system. It is further used to charge the 12V battery as necessary.

During braking (brake switch on), a higher amount of regeneration will be allowed. This will increase the deceleration force so the driver will automatically adjust the force on the brake pedal. In this mode, more charge is sent to the battery module. If the ABS system is controlling the locking of the wheels, an 'ABS-busy' signal is sent to the motor control module. This will immediately stop generation to prevent interference with the ABS system. When the high voltage battery is fully charged, there will only be generation for the vehicle's 12V system.

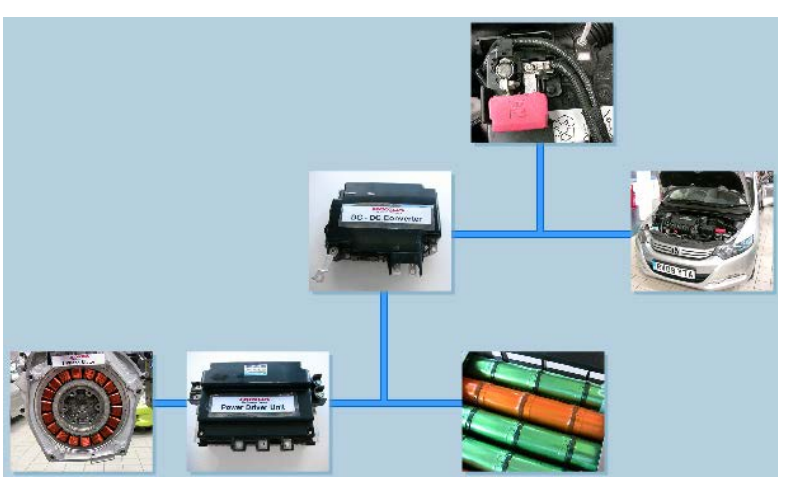

Figure 0-42 Current flow – deceleration

✍ Add arrows to show direction of current flow

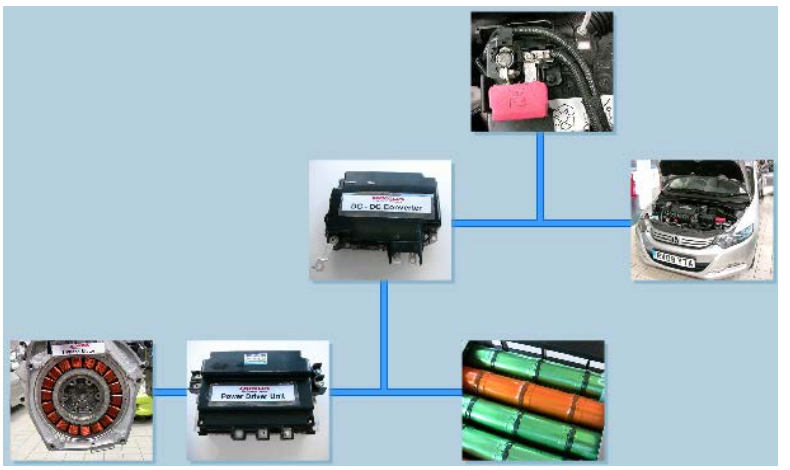

Figure 0-43 Current flow - braking

✍ Add arrows to show direction of current flow

Idling During idling, the flow of energy is similar to that for cruising. If the state of charge of the battery module is very low, the motor control module (MCM) will signal the engine control module (ECM) to raise the idle speed to approximately 1100 rev/min.

Summary the IMA technique used by most hybrid cars can be thought of as a kinetic energy recovery system (KERS). This is because instead of wasting heat energy from the brakes as the vehicle is slowed down, some is converted to electrical energy and stored in the battery as chemical energy. This is then used to drive the wheels so saving chemical energy from the fuel!

📖 Look back over the previous section and write out a list of the key bullet points here:

Alternative fuels

Introduction The use of an alternative fuel can lessen dependence upon oil and reduce greenhouse gas emissions. There are a number of alternative fuels and each of these is outlined briefly in this section.

Figure 0-44 NASCAR flex-fuel (Source: Ford Media)

Ethanol Ethanol is an alcohol-based fuel made by fermenting and distilling starch crops, such as corn. It can also be made from plants such as trees and grasses.

- E10 is a blend of 10% ethanol and 90% petrol/gasoline. Almost all manufacturers approve the use of E10 in their vehicles.
- E85 is a blend of 85% ethanol and 15% petrol/gasoline and can be used in flexible fuel vehicles (FFVs). FFVs are specially designed to run on petrol/gasoline, E85, or any mixture of the two. These vehicles are offered by several manufacturers.

There is no noticeable difference in vehicle performance when E85 is used. However, FFVs operating on E85 usually experience a 20-30% drop in miles per gallon due to ethanol's lower energy content.

Figure 0-45 E85 Vehicle

Advantages and disadvantages This screen lists some advantages and disadvantages of this alternative fuel:

Advantages

- Lower emissions of air pollutants
- More resistant to engine knock
- Added vehicle cost is very small

Disadvantages

- Can only be used in flex-fuel vehicles
- Lower energy content, resulting in fewer miles per gallon

- Limited availability

Biodiesel Biodiesel is a form of diesel fuel manufactured from vegetable oils, animal fats, or recycled restaurant oils. It is safe, biodegradable, and produces less air pollutants than petroleum-based diesel.

Biodiesel can be used in its pure form (B100) or blended with petroleum diesel. Common blends include B2 (2% biodiesel), B5, and B20. B2 and B5 can be used safely in most diesel engines. However, most vehicle manufacturers do not recommend using blends greater than B5, and engine damage caused by higher blends is not covered by some manufacturer warranties.

Figure 0-46 Biodiesel engine

Advantages and disadvantages This screen lists some advantages and disadvantages of this alternative fuel:

BIODIESEL

Advantages

- Can be used in most diesel engines, especially newer ones
- Less air pollutants (other than NOx) and less greenhouse gases
- Biodegradable
- Non-toxic
- Safer to handle

Disadvantages

- Use of blends above B5 may not yet be approved by manufacturers
- Lower fuel economy and power (10% lower for B100, 2% for B20)
- More nitrogen oxide emissions
- B100 generally not suitable for use in low temperatures
- Concerns about B100's impact on engine durability

Natural gas Natural gas is a fossil fuel made up mostly of methane. It is one of the cleanest burning alternative fuels. It can be used in the form of compressed natural gas (CNG) or liquefied natural gas (LNG) to fuel cars and trucks.

Dedicated natural gas vehicles are designed to run on natural gas only, while dual-fuel or bi-fuel vehicles can also run on petrol/gasoline or diesel. Dual-fuel vehicles take advantage of the wide-spread availability of conventional fuels but use a cleaner, more economical alternative when natural gas is available. Natural gas is

stored in high-pressure fuel tanks so dual-fuel vehicles require two separate fuelling systems, which take up extra space.

Natural gas vehicles are not produced commercially in large numbers. However, conventional vehicles can be retrofitted for CNG.

Figure 0-47 Natural gas converted engine

Figure 0-48 Natural gas filler

Advantages and disadvantages This screen lists some advantages and disadvantages of this alternative fuel:

CNG

Advantages

- 60-90% less smog-producing pollutants
- 30-40% less greenhouse gas emissions
- Less expensive than petroleum fuels

Disadvantages

- Limited vehicle availability
- Less readily available
- Fewer miles on a tank of fuel

Propane or liquefied petroleum gas (LPG) Propane or liquefied petroleum gas is a clean-burning fossil fuel that can be used to power internal combustion engines. LPG-fuelled vehicles produce fewer toxic and smog-forming air pollutants.

Petrol/gasoline and diesel vehicles can be retrofitted to run on LPG in addition to conventional fuel. The LPG is stored in high-pressure fuel tanks, so separate fuel systems are needed in vehicles powered by both LPG and a conventional fuel.

Figure 0-49 Propane tank http://www.rasoenterprises.com

Advantages and disadvantages This screen lists some advantages and disadvantages of this alternative fuel:

PROPANE

Advantages

- Fewer toxic and smog-forming air pollutants
- Less expensive than petrol/gasoline

Disadvantages

- No new passenger cars or trucks commercially available but vehicles can be retrofitted for LPG
- Less readily available than conventional fuels
- Fewer miles on a tank of fuel

Hydrogen Hydrogen (H_2) can be produced from fossil fuels (such as coal), nuclear power, or renewable resources, such as hydropower. Fuel cell vehicles powered by pure hydrogen emit no harmful air pollutants.

Hydrogen is being aggressively explored as a fuel for passenger vehicles. It can be used in fuel cells to power electric motors or burned in internal combustion engines.

It is an environmentally friendly fuel that has the potential to dramatically reduce dependence on oil, but several significant challenges must be overcome before it can be widely used.

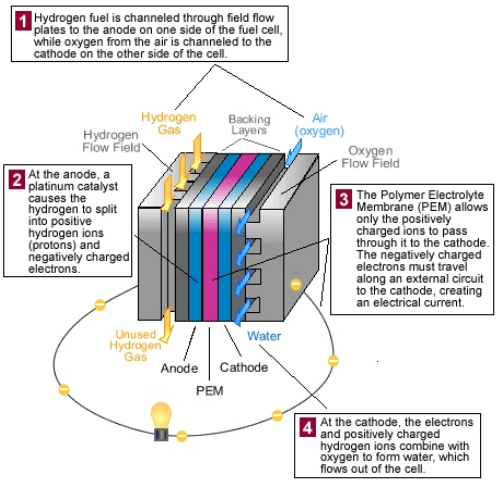

Figure 0-50 Fuel cell operation

Advantages and disadvantages This screen lists some advantages and disadvantages of this alternative fuel:

Advantages

- Can be produced from several sources, reducing dependence on petroleum
- No air pollutants or greenhouse gases when used in fuel cells
- It produces only NOx when burned in internal combustion engines

Disadvantages

- Expensive to produce and is only available at a few locations
- Fuel cell vehicles are currently too expensive for most consumers
- Hydrogen has a lower energy density than conventional petroleum fuels. For this reason it is difficult to store enough hydrogen on a vehicle to travel more than 200 miles

Summary This section has given an overview of some alternative fuels. All of them offer some significant advantages either commercially, environmentally or both. There are also some disadvantages not least of which is that the cost of production is high. This is likely to change however as their use becomes more widespread.

Look back over the previous section and write out a list of the key bullet points here:

Diesel Systems

Diesel Introduction

Diesel Fuel Injection Systems Diesel engines have the fuel injected into the combustion chamber where it is ignited by heat in the air charge. This is known as compression ignition (CI) because no spark is required. The high temperature needed to ignite the fuel is obtained by a high compression of the air charge.

High Pressure Pump Diesel fuel is injected under high pressure from an injector nozzle, into the combustion chambers. The fuel is pressurised in a diesel injection pump. It is supplied and distributed to the injectors through high pressure fuel pipes. Some engines use a unit injector where the pump and injector are combined in a single unit. The high pressure generation is from a direct acting cam or a separate pump.

Air Flow The air flow into a diesel engine is usually unobstructed by a throttle plate so a large air charge is always provided. Throttle plates may be used to provide control for emission devices. Engine speed is controlled by the amount of fuel injected. The engine is stopped by cutting off the fuel delivery. For all engine operating conditions a surplus amount of air is needed for complete combustion of the fuel.

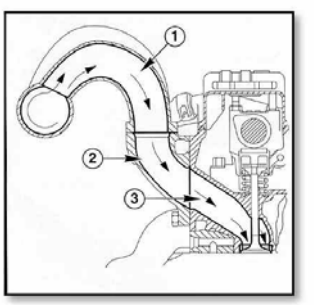

Air intake for diesel engine

Direct and Indirect Injection Small high speed diesel engine compression ratios are from about 19:1 for direct injection (DI) to 24:1 for indirect injection (IDI). These compression ratios are capable of raising the air charge to temperatures of between 500°C and 800°C. Very rapid combustion of the fuel occurs when it is injected into the hot air charge.

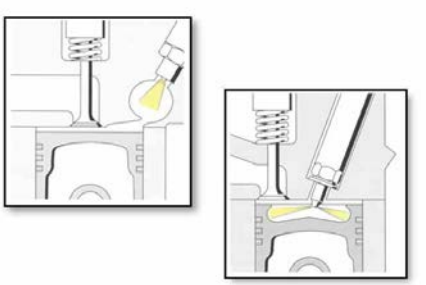

Diesel Combustion Process The combustion process follows three phases. These are the ignition delay, flame spread and controlled combustion phases. In addition, an injection lag occurs in the high pressure pipes as the pressure builds up just before injection.

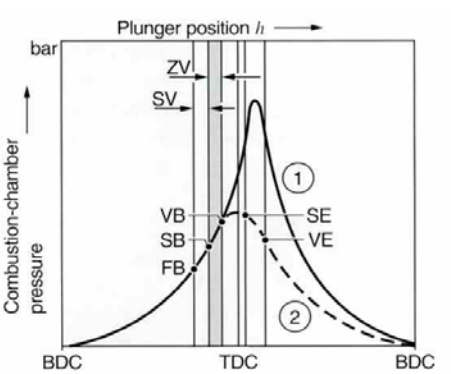

Combustion phases

Phases of Diesel Fuel Combustion The most important phase of controlled combustion is when fuel is being injected into a burning mixture. This must be at a rate that maintains an even combustion pressure onto the piston throughout the critical crankshaft rotational angles. This gives maximum torque and efficient fuel usage, because temperatures remain controlled and the heat lost to the exhaust is minimised. The low temperatures also help to keep nitrogen oxide emissions (NOx) to a minimum.

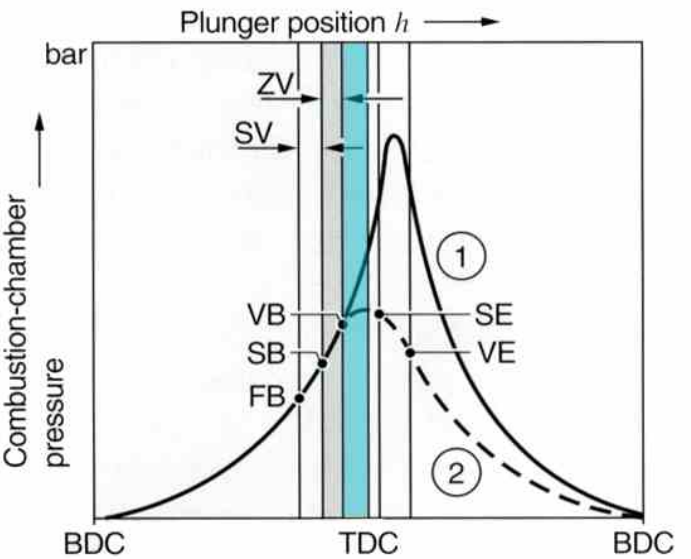

Controlled combustion in cylinder

Flame Spread The speed of flame spread in a diesel engine is affected by the air charge temperature and the atomisation of the fuel. These characteristics are shared with the delay period. A sufficiently high air charge temperature, of at least 450°C, is a minimum requirement for optimum ignition and combustion.

Delay Phase The delay phase or ignition lag for diesel fuel combustion lasts a few milliseconds. It occurs immediately on injection as the fuel is heated up to the self-ignition temperature. The length of the delay is dependent on the compressed air charge temperature and the grade of fuel. The air charge temperature is also affected by the intake air temperature and the engine temperature.

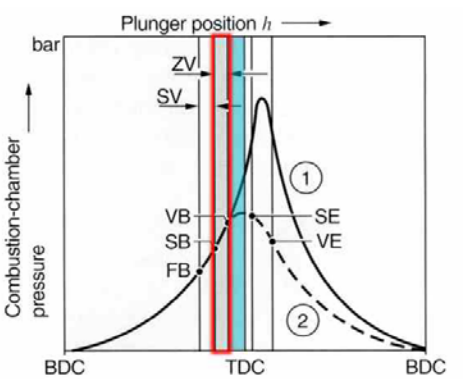

Ignition lag or delay

Diesel Knock A long delay period allows a high volume of fuel to be injected before ignition and flame spread occurs. In this situation diesel knock is at its most severe. When a diesel engine is cold, there may be insufficient heat in the air charge to bring the fuel up to the self-ignition temperature. When ignition is slow, heavy knocking occurs.

Cold Start Devices To aid starting and to reduce diesel knock, cold start devices are used. For indirect injection engines, starting at lower than normal operating temperatures requires additional combustion chamber heating. For direct injection engines, cold start devices are only required in frosty weather.

Glow plug

Initial Delay An initial delay, known as injection lag, occurs in the high pressure fuel lines. This occurs between the start of the pressure rise and the point when pressure is sufficient to overcome the compression spring force in the injectors.

Pipes and injectors

Diesel Fuel Injection Timing Ignition of the fuel occurs in the combustion chamber at the time of injection of fuel into the heated air charge. The injection point and the ignition timing are therefore, for all purposes, the same thing.

Ignition timing mark

Injection Timing Diesel engine injection timing is equivalent to the ignition timing for petrol engines. Injection timing must fall within a narrow angle of crankshaft rotation. It is advanced and retarded for engine speed and load conditions. Injection timing is set by accurate positioning of the fuel injection pump. Incorrect timing leads to power loss. An increase in the production of nitrogen oxides (NOx) when too far advanced or an increase in the hydrocarbon (HC) emissions, when too far retarded also occurs.

Diesel pump being timed on engine

Particulates Another exhaust gas constituent is particulate emissions. These result from incomplete combustion of the fuel. Particulates are seen as black carbon smoke in the exhaust under heavy load or when fuel delivery and/or timing is incorrect. White smoke may also be visible at other times, such as when the injection pump timing is incorrect. It also occurs when compression pressures are low or when coolant has leaked into the combustion chambers.

Direct and Indirect Injection Direct injection (DI) is made into a combustion chamber formed in the piston crown. Indirect injection (IDI) is made into a pre-combustion chamber in the cylinder head. Direct injection engines are generally more efficient but the indirect types are quieter in operation. The internal stresses in the engine are very high. Direct injection produces a higher detonation stress than indirect injection and therefore the smaller engines tended, until recently, to be the indirect type.

Electronic Control Recent developments in electronic diesel fuel injection control have made it possible to produce small direct injection engines. It is probable that all new designs of diesel engine will be of this type. Diesel engines are built to withstand the internal stresses, which are greater than other engines. Diesel engines are particularly suitable for turbocharging. This improves power and torque outputs.

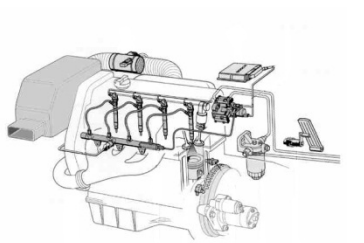
Common rail injection

Exhaust Gas Recirculation Exhaust gas recirculation (EGR) has two advantages for diesel engine operation. EGR is usually used to reduce nitrogen oxide (NOx) emissions and this is true for diesel engines. Additionally, a small quantity of hot exhaust gas in the air charge of a cold engine helps to reduce the delay period and the incidence of cold engine diesel knock.

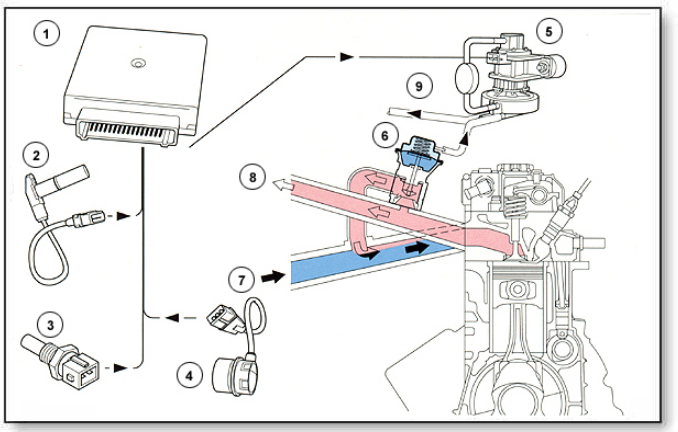

EGR

Catalytic Converters Many modern diesel engined vehicles are fitted with oxidation catalytic converters that work in conjunction with other emission components to reduce hydrocarbon and particulate emissions. Turbo charging, EGR and catalytic converters are described in the Air Supply, Exhaust and Emission Control learning programme.

Inside a catalytic converter

Injection Pressures The fuel systems for direct and indirect injection are similar and vary only in injection pressures and injector types. Until recently, all light high speed diesel engines used rotary diesel fuel injection pumps. These pumps producing injection pressures of over 100 bar for indirect engines. However, these can rise up to 1000 bar at the pump outlet, for turbocharged direct injection engines.

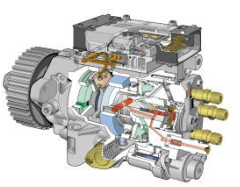

Bosch injection pump

Pressure Differential Injectors operate with a pulsing action at high pressure to break the fuel down into finely atomised parts. Atomisation is critical to good fuel distribution in the compressed air charge. The air charge pressure may be in excess of 60 bar. The pressure differential, between the fuel injection pressure and air charge pressure, must be sufficient to overcome the resistance during injection. This will also give good fuel atomisation and a shorter injection time.

Swirl An aid to good fuel distribution in the air charge is the swirl in the air flow induced in the inlet manifold. This is created by the combustion chamber design. Air flow into and out of the pre-combustion chamber produces a swirl in the chamber. These chambers are often referred to as swirl chambers. The 'bowl in piston' combustion chambers, of direct injection engines, are shaped to maintain the induction air swirl during compression and combustion.

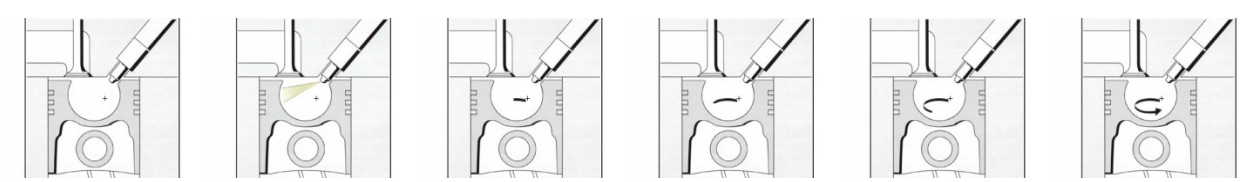

Diesel Fuel Injection Components The main components of a diesel fuel system provide for either the low pressure or the high pressure functions. The low pressure components are the fuel tank, the fuel feed and return pipes and hoses, a renewable fuel filter with a water trap and drain tap, and a priming or lift pump. Fuel heaters may be fitted in the filter housing to reduce the risk of paraffin separation and waxing at freezing temperatures.

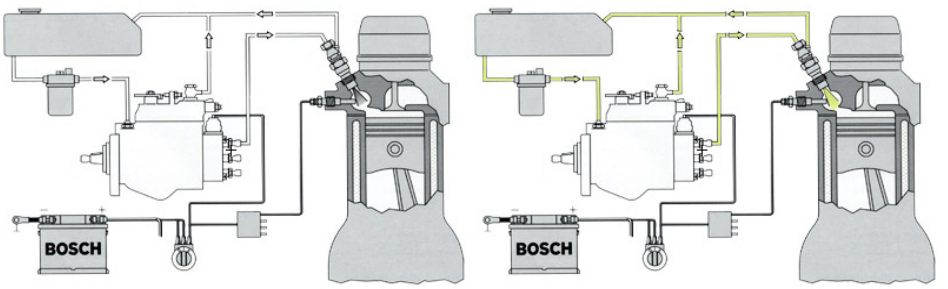

System components

High Pressure Components The high pressure components are the fuel injector pump, the high pressure pipes and the injectors. Other components provide for cold engine starting. Electronically controlled systems include sensors, an electronic diesel control (EDC) module and actuators in the injection pump.

Injection pump, pipes and injectors

Low Pressure Components The fuel tank is a pressed steel sealed unit, treated both inside and out with anti-corrosion paint. The inside is treated in order to resist corrosion from water that accumulates at the bottom of the tank. Some modern tanks are manufactured from a plastic compound that is burst proof in an accident. They are also unaffected by the diesel fuel, which can attack some plastic materials.

Fuel tank

Low Pressure Fuel Lines Low pressure fuel lines are steel or hard plastic and connections made with short hoses clamped at each end. New vehicles are using quick coupling connections for ease of service and assembly operations. The feed lines run from the tank to the filter and then onto the injection pump. A low pressure return line is used to maintain a fuel flow through the injection pump and the fuel injectors for lubrication and cooling. The return carries fuel back to the filter housing or the fuel tank.

Fuel Filter The fuel filter is a micro-porous paper element in a replaceable canister or detached filter bowl. The filter includes a water and sediment trap and tap for draining the water. Many vehicles have a sensor in the water trap. This completes a warning lamp circuit when water is detected above a certain level. All diesel fuel entering the injection pump and injectors must be fully filtered. The internal components of the pump and injectors are manufactured to very fine tolerances. Even very small particles of dirt could be damaging to these components.

Filter and housing

Fuel Heating Fuel heating may be provided from the engine coolant or by an electric heater element in the filter housing. The fuel is lifted from the fuel tank to the injection pump by the transfer pump in the injection pump on some vehicles. This is possible where the distance and height of lift are of small dimensions.

Injection pump

Heated fuel filter housing

Fuel Lift Pump For improved delivery and for priming the injection pump another pump may be necessary. A conventional fuel lift pump driven from the engine camshaft is a common method. These pumps in some instances have an external operating lever. Hand operated priming pumps are fitted for use when the vehicle runs out of fuel. They are also used for service operations such as when the filter is changed. Many modern injector pumps are self-priming.

Fuel priming pump

Injection Pump The injector pump shown is a rotary distributor type pump. These pumps are filled with diesel fuel, which provides not only fuel for the engine, but also for full lubrication and cooling of the pump. These pumps are made from specially manufactured materials with surface treatments. Parts are lapped together to give very fine tolerances. Only clean and filtered fuel should be used to avoid damage to these parts.

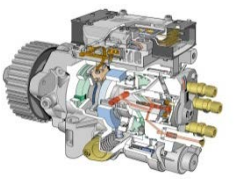
Rotary injector pump

Types of Pump There are two types of pump with different internal operation. Two major original designers make or license the manufacture of these pumps. The Lucas DP and Bosch VR pumps are radial-piston designs. They use opposing pistons or plungers inside a cam ring to produce the high pressure. Bosch V series pumps are axial-piston designs having a roller ring and cam plate attached to an axial piston or plunger in the distributor head to generate the high pressure.

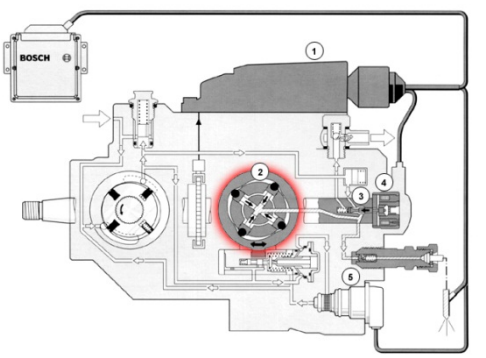

Bosch VR pump radial pistons

Pump Operation The operation of the two types of injector pump are quite different and explained separately further on in this section. Later versions of these pumps have electrical and electronic control. The latest versions have full electronic control.

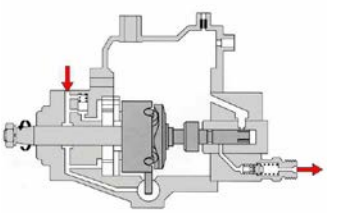
Bosch VE pump cam plate and plunger

High Pressure Outlets All types of pumps have delivery valves or pressure valves fitted to the high pressure outlets, which feed to each cylinder in turn. The delivery valves control the generation of pressure waves in the high pressure pipes. They do this by giving initially a quick pressure drop and then by retaining a lower residual pressure. The delivery valve consists of a conical valve held closed by a compression spring and opened by hydraulic pressure when injection pressures are produced in the injection pump.

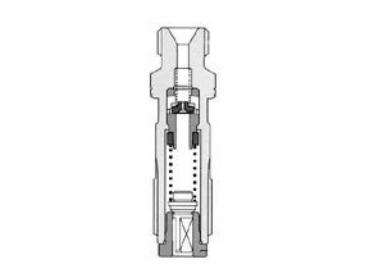

Delivery valves

Delivery Valve Closure of the delivery valve when the injector pump pressure drops, allows a quick pressure drop in the pipe and injector. This means the injectors will close fully. Without the valve, pressure waves would oscillate in the pipe and force the injector to reopen. This would cause unwanted fuel to be injected. The retained low pressure helps to prevent fuel dribble from the injector nozzle during the non-injection period. It also aids lubrication through the leak-off pipes.

High Pressure Pipes The high pressure pipes are of double thickness steel construction and are all of the same length. This is so that the internal pressure rise characteristics are identical for all cylinders. The high pressure connections are made by rolled flanges on the pipe ends and threaded unions securing the rolled flanges to convex, or occasionally concave, seats in the delivery valves and injectors.

Fuel Injectors The fuel injectors are fitted into the cylinder head with the nozzle tip projecting into the pre-combustion (IDI) or combustion chamber (DI). The injectors for indirect combustion are of a pintle or 'pintaux' design and produce a conical spray pattern on injection. The injectors for direct injection (DI) are of a pencil type multi-hole design that produces a broad distribution of fuel on injection.

DI injector

IDI injector

Injector Operation Fuel injectors are held closed by a compression spring. They are opened by hydraulic pressure when it is sufficient to overcome the spring force on the injector needle. The hydraulic pressure is applied to a face on the needle where it sits in a pressure chamber. The fuel pressure needed is in excess of 100 bar (1500 psi). This pressure lifts the needle and opens the nozzle, so that fuel is injected in a fine spray pattern into the combustion chamber.

Injector Spray The pressure drops when fuel is injected and the spring force on the needle closes the injector. This is immediately followed up by a build-up of pressure that again opens the nozzle. This results in a cycle of oscillations of the needle to give a finely atomised and almost continuous spray. The spray continues until the pump pressure is reduced at the end of the delivery stroke.

New Types of Injector The newer types of injector have two springs of different value in order to provide a small initial charge for ignition and then the main charge for controlled burning. These injectors reduce diesel knock on direct injection engines and give a smoother engine performance. Fuel injectors are carefully matched to the type of engine and pump.

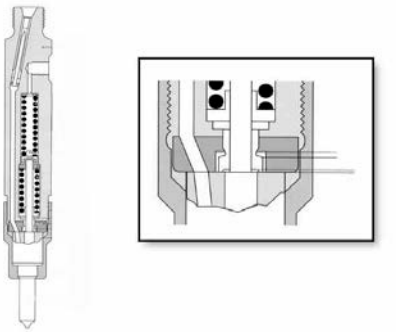

Two spring direct injection injector

Glow Plugs There are two types of cold starting devices used on diesel engines. These are glow plugs and flame start devices. Glow plugs are used mainly on indirect injection engines although they are used on some small direct injection engines. Flame start devices are used on many, but not all, direct injection engines. Glow plugs are fitted in the combustion chamber. Their purpose is to help to ignite the fuel during injection.

Flame Start Devices Flame start devices are fitted in the inlet manifold. They preheat the intake air so that it achieves a high temperature on the compression stroke. This diagram shows the components of a flame start device and the electrical control circuit.

Flame start device

Make a simple sketch to show all the common components of a diesel fuel injection system.

Look back over the previous section and write out a list of the key bullet points here:

Bosch VE Pump System

Bosch Axial-Piston Rotary Injection Pumps The mechanical pumps are the VE series. Those with partial or full electronic control are the VP series. There are a number of variations of these injection pumps. They all start with the basic pump, which can be developed with add-on modules and/or electronic control to meet a wide range of engine applications. The basic unit and add-on modules are matched to the design requirements of the engine.

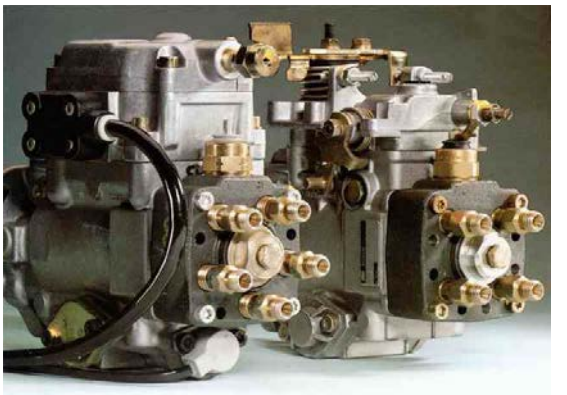

VE pump

Fuel Supply The fuel supply system is similar to all diesel fuel systems with a fuel tank, a filter and water trap and feed and return pipes, to give a continuous flow of fuel through the pump and injectors for lubrication and cooling. Fuel heaters and water-in-filter sensors are fitted when necessary for vehicle usage conditions.

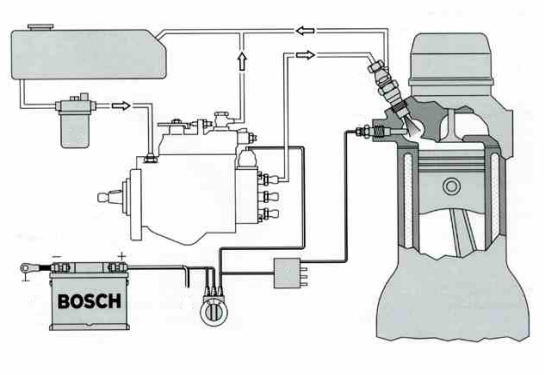

Injection system fuel supply

Hydraulic Circuit This diagram shows the hydraulic circuit inside a basic VE type fuel injection pump. The main functional areas are: pump priming and body cavity pressure, high pressure generation, engine speed governing, fuel shut off, and injection timing control. For most vehicle applications, the basic pump is developed with add-on modules and electronic control.

Basic Pump Operation The injector pump shaft is made up from a number of separate components that are driven by dog drives from each component to the next. The input shaft is driven from the engine crankshaft and geared to half engine speed for four stroke engines. The input shaft carries the hub and vanes for the fuel supply pump and a gear to drive the engine speed governor. The input shaft dogs are connected by a yoke to the cam plate and high pressure distributor plunger.

Pump shaft components

Cam Plate and Distributor Plunger The shaft components all rotate as one but the cam plate and distributor plunger also move axially. The cam plate and plunger form the pump element for high pressure generation when pushed into the distributor head. The cam plate and plunger are moved axially by cam lobe contact with a roller ring for pressure generation. Two return springs maintain the cam plate in contact with the roller ring.

Pump Components The roller ring has limited rotational movement for injection timing control. Sitting on, but not rotating with the distributor plunger, is a control spool or collar for engine speed governing. All these components are fitted into the injector pump body. The body is filled with pressurised fuel for transfer to the high pressure plunger and for hydraulic actuation of the injection timing control plunger. It is filled with fuel from a vane type supply pump driven by the input shaft. The pump chambers are formed in the eccentric ring of the pump bore by centrifugal force on the vanes when the pump is rotating.

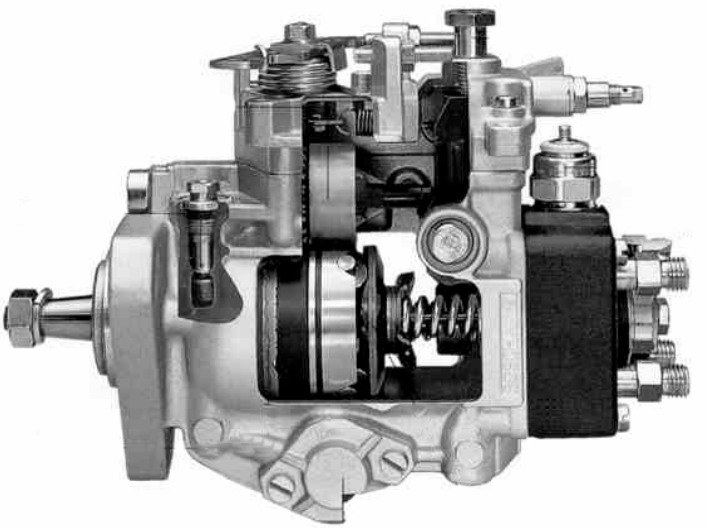

Pump sub-assemblies

Inlet and Outlet Ports The inlet and outlet ports of the vane type supply pump are kidney shaped recesses formed in the pump casing. The inlet port is connected to a feed from the fuel filter and return drillings from a pressure control valve and the injection timing plunger bore. The outlet port feeds to the pump body cavity and a pressure control valve. The pump feed is continuous and fuel is allowed to return to the fuel tank through an overflow restrictor in the pump outlet. The overflow restrictor is matched to the pressure control valve in the pump outlet. Pressure is retained at the desired value for any speed and load conditions.

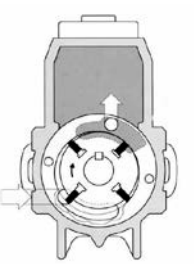

Vane pump and ports

Pump Body Pressure The fuel in the pump body cavity is pressurised in relation to the rise in engine speed. Typical pressures are from 50 kPa (0.5 bar) at idle speeds to 800 kPa (8bar) under maximum fuel delivery conditions. The pump body pressure is used to provide a positive feed to the high pressure plunger and to advance the injection timing in relation to the rise in engine speed.

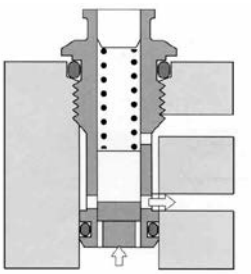

Pressure control valve

Air Purging The Bosch VE pump has a continuous flow circuit and air can be purged by a priming pump or the internal supply pump without the need for a bleed valve. This is required after replacing the fuel filter during service operations. However, high pressure air purging requires opening of the injector high pressure unions. This is needed after removal of any of the high pressure components.

High Pressure Generation The operation of Bosch pumps is based on high pressure generation by an axial distributor plunger in the distributor head. Fuel is delivered to the plunger bore from the pump body through a drilling in the distributor head. The plunger has a machined slot for each cylinder in the engine, which provide for fuel intake when they align with the distributor head intake port. Through the centre of the plunger is a drilling which is connected to a slot at the high pressure outlet. It has transverse pressure venting ports or cut-off bores for fuel metering.

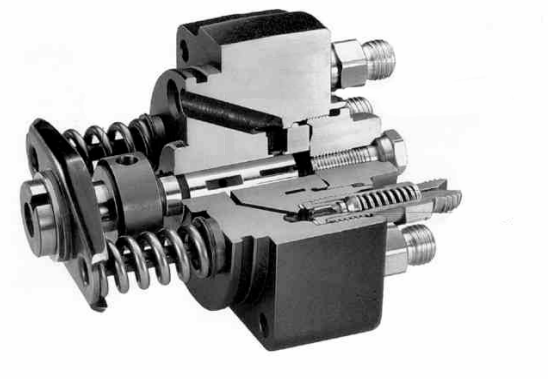

Distributor head

Distributor Plunger and Cam Plate The distributor plunger is connected to the cam plate and these rotate and move axially as one unit. Rotary drive is through a dog and yoke coupling from the distributor inlet shaft. Axial movement for fuel delivery is obtained by cam lobe contact with a roller ring in the pump body. The return for the entry of fuel is made by two compression springs. Fuel entry into the distributor head in front of the plunger occurs when the inlet port and metering slots align. This occurs as the plunger is moved out of the distributor head.

Fuel Delivery As the distributor plunger rotates the cam lobes come into contact with the rollers. This causes the plunger to be forced into the distributor head. This occurs as the delivery slot aligns with a delivery port for one of the cylinders. Fuel is pumped at high pressure through the distributor head, pressure valve, high pressure fuel pipes and the injector into the combustion chamber. Fuel delivery ceases when the transverse pressure venting ports in the plunger move out from the control spool, at which point the pressure is dissipated to the pump body cavity. The control spool position is regulated by the engine speed governor.

Fuel Metering and Engine Speed Governing Engine speed is governed by fuel metering. Fuel is metered by a combination of pump body pressure and the venting of fuel pressure in the high pressure pumping chamber. The venting of the high pressure is made by a control spool, which slides with a very close tolerance on the high pressure plunger. Transverse ports in the plunger form a cut-off bore, which is covered by the control spool during fuel delivery.

Engine Speed Governor As the plunger moves axially on the delivery stroke, the cut-off bore becomes exposed by the movement. This means that the high pressure is dissipated to the pump body cavity. The engine speed governor moves the control spool along the plunger. This increases or decreases the effective distance of plunger travel before the cut-off ports are exposed. In this way, a full range of fuel quantities can be delivered. The lever is moved by the governor assembly, in response to driver demand and an opposing force provided by centrifugal weights acting on a sliding sleeve.

Variable Speed Governor Operation of the variable speed governor is achieved by balancing the forces applied to the tensioning lever. Driver demand pulls against the spring and lever to increase fuel delivery. Centrifugal weights are attached to a geared hub driven from the input shaft. The weights are thrown outwards by centrifugal force and pivot in the hub to exert a force onto a sliding sleeve. The sliding sleeve presses on the starting and tensioning levers of the control spool. The direction of speed control is to reduce the amount of fuel delivered. When a balance between driver demand and speed control is achieved the governor maintains engine speed.

Injection Timing Control Injection timing is automatically adjusted in relation to engine speed by partial rotation of the roller plate, which is fitted in bearings in the pump body. The rollers on the roller plate act on the cam plate lobes for high pressure generation. Rotation of the roller plate towards the cam plate advances the injection timing. The pump body cavity pressure increases in relation to engine speed and this pressure is used to advance the roller plate.

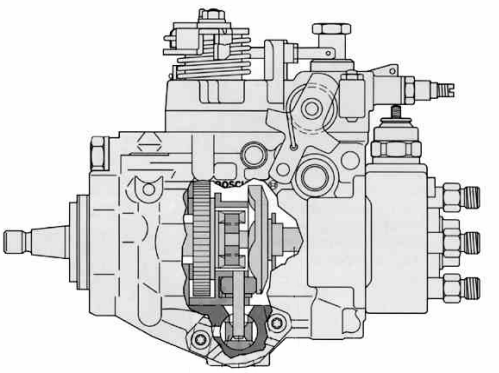

Timing mechanism

Timing Adjusting The roller plate is fitted with an actuating pin that locates in the timing adjusting plunger. The timing adjusting plunger is fitted in the pump body. At one end of the plunger is a compression spring to retard the timing. At the other end is a hydraulic chamber connected by a bore and restriction in the plunger to the pump body cavity.

Timing Advance Chamber Pressure The pump body pressure rises as the speed increases. The timing advance chamber pressure also rises and pushes the plunger against the compression spring. This rotates the roller plate to an advanced position. When the speed reduces, the pressure reduces and the timing moves towards a retarded position.

Add-On Modules The basic pump is usually adapted for individual engine applications by add-on modules. These modules provide improved performance for power, torque, cold starting, idle and emission control. Some of these add-on modules are shown here.

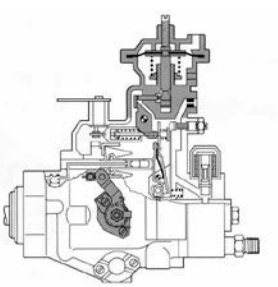

Distributor pump

Pressure Compensator The manifold pressure compensator is used to increase the fuel delivered on turbo charged engines, in relation to the amount of boost pressure in the inlet manifold. These adjusters operate by limiting the full load stop position of the governor tensioning lever. A pivoted stop lever limits the travel of the tensioning lever.

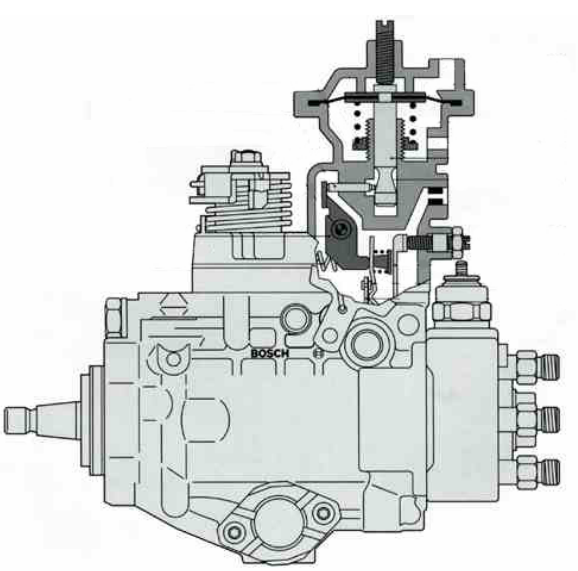

Manifold pressure compensator

High Load Conditions A hydraulic add-on, for increasing the quantity of fuel delivered in low speed high load conditions, operates in a similar manner by adjusting the full load stop with a conical plunger. Pump body cavity pressure is applied to the conical plunger so that it rises in relation to engine speed. This allows the tensioning lever assembly a greater distance of travel to the full load position when the engine speed is low. This add-on is used to produce the power and torque characteristics required for the type of use of the vehicle.

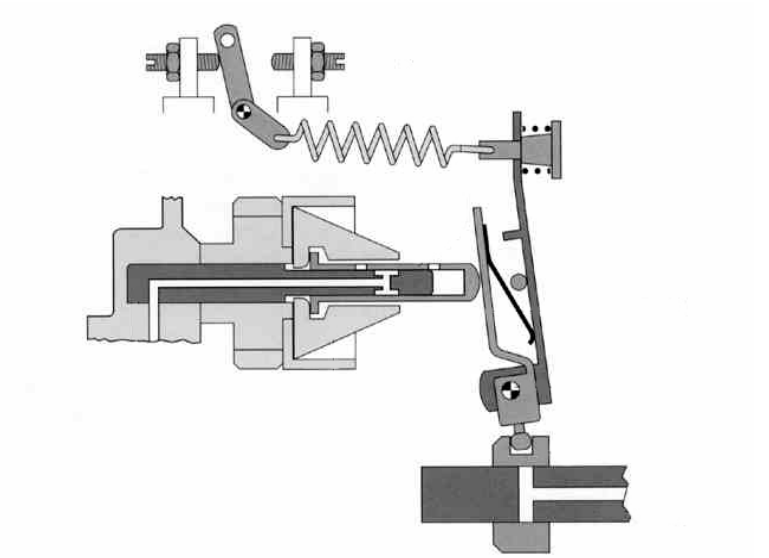

Load dependent start of delivery governor

Load Dependent Injection Timing In order to adjust the injection timing in relation to load as well as speed, the timing requires retardation during high speed low load conditions. The amount of injection advance is determined by pump body cavity pressure. As this is produced in relation to engine speed, a device that can release the pump body pressure is required to retard the injection timing.

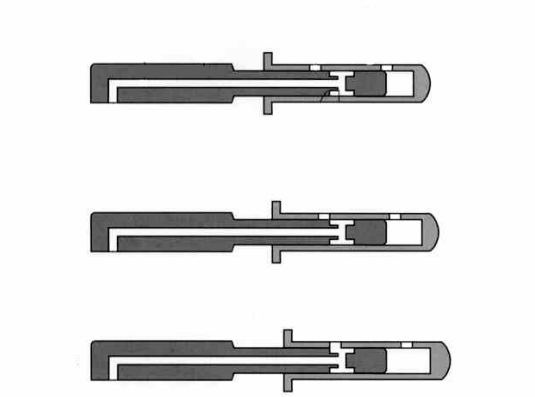

Load dependent valve

Cold Starting and Engine Warm Up A number of add-on modules provide for fast idle and injection advance during cold start and warm up. For cold engine fast idle, an electrically heated 'waxstat' acts on the governor spring by means of a cable and lever. The waxstat is heated to return the governor to the normal idle position when the engine temperature reaches about 50°C. A thermostatic switch fitted in the coolant thermostat housing, cuts of the electrical supply current to the waxstat above this temperature.

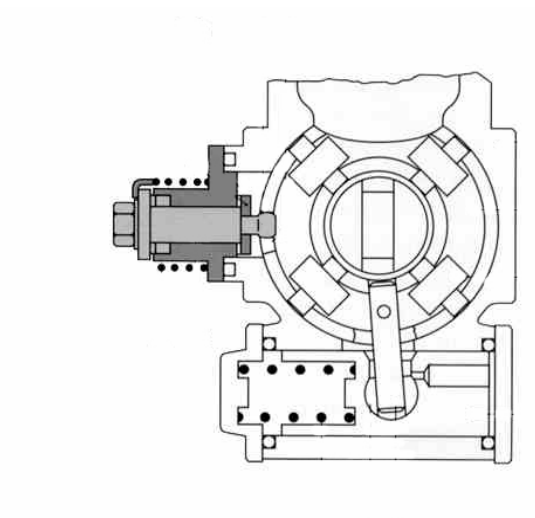

Cold start and warm up modules waxstat

Electrical Shut off Device Most injection pumps have an electrical shut off solenoid. The solenoid is supplied from the ignition switch.

Describe briefly the operation of the Bosch VE injection system.

Look back over the previous section and write out a list of the key bullet points here:

Bosch VR System

VR Pumps with Electronic Control The Bosch VR pumps are used on high-speed direct injection diesel engines for cars and light commercial vehicles. They are radial-piston distributor injection pumps having opposing plungers that are forced inwards by cam lobes on the inside of a cam ring, in order to produce high pressure, which can be up to 1400 bar in some applications. The cam is located in the pump body and the plungers are in the rotor driven by the pump spindle. Four cylinder engines have two plungers and four cam lobes. Six cylinder engines have three plungers and six cam lobes. The pump is driven from the engine at half crankshaft speed.

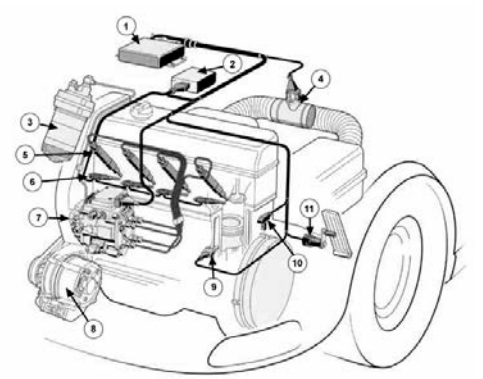

Bosch VR pump system

Low Pressure Feed A low pressure feed to the injection pump is provided by a submerged electrical pump in the fuel tank. This provides for priming and positive pressure in the injection pump. In common with all diesel fuel systems, a fuel filter and water trap is used to ensure that only very clean fuel is delivered to the pump. Return pipes are used for excess fuel leakage, for purging the pump and for lubrication of the injectors.

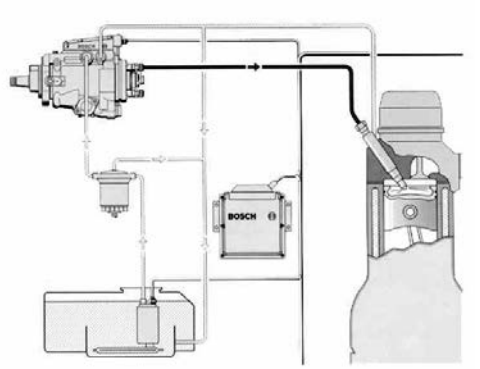

Fuel system

Vane Pump Inside the distributor pump is a vane type pump, which is used to produce the pump body pressure. Pump body pressure is used for charging the high-pressure chamber between the plungers and for injection advance. A pressure control valve is used to prevent excessive pressure. It is a spring loaded plunger that is lifted by hydraulic pressure to expose ports in the valve bore. This will then allow fuel to flow back to the inlet side of the vane type pump.

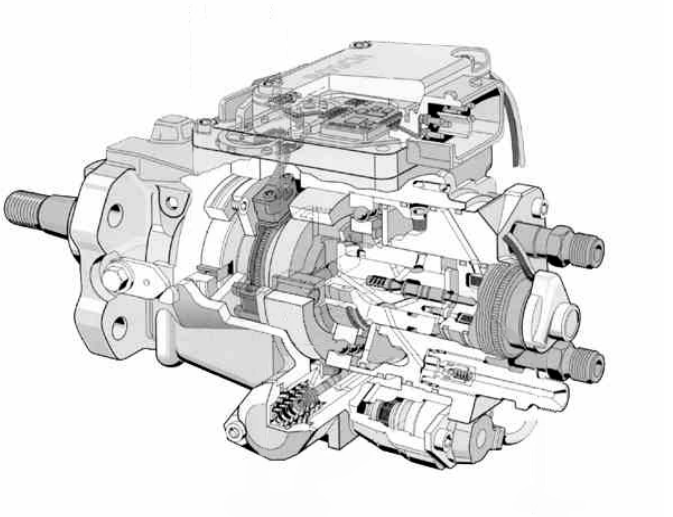

Pump components

Low Pressure Stage An overflow throttle valve, in the pump housing, is used to allow a defined quantity of fuel to flow back to the fuel tank at all times. This provides some cooling in the pump and venting of air during pump priming. A second larger overflow bore in the valve opens at a given pressure to allow a flow of fuel from the distributor head.

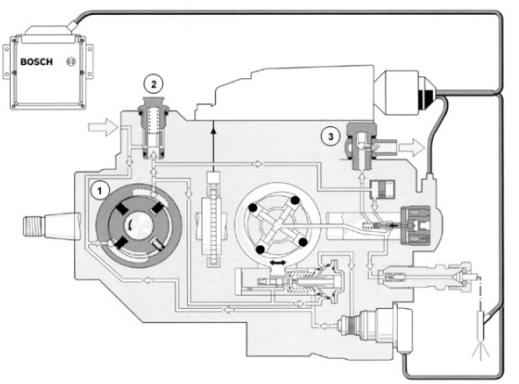

Distributor pump – low pressure stage

Electronic Control The Bosch VR pump has full electronic control for fuel metering and for injection advance. The electronic diesel control unit consists of two electronic control modules to perform the control functions. These two modules are the engine control ECU and the injection-pump ECU. The pump ECU is fitted on top of the pump.

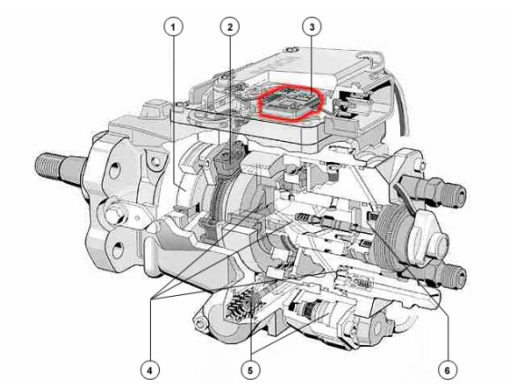

Pump ECU

Fuel Metering Fuel metering is controlled by the high-pressure solenoid valve. This is an electrically actuated valve set centrally inside the distributor rotor. There are connecting bores in the distributor rotor for filling of the high-pressure circuit, through the inlet port at pump body pressure, and for delivery at high pressure to the fuel injectors. These are either connected or separated by the position of the valve.

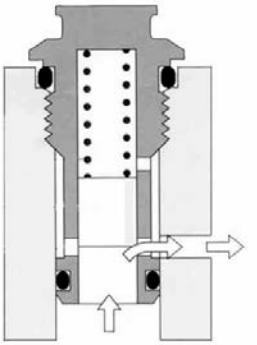

Pressure control valve

Solenoid Valve The high-pressure solenoid valve is closed by an electrical signal from the pump electronic control unit. When the valve is closed, fuel under high-pressure passes from the high-pressure pump chamber, through the bores in the rotor and distributor head, the return-flow throw throttle valve (delivery valve) and out to the injectors. It is then injected into the engine combustion chambers. The few microseconds of time that the valve remains closed is referred to as the delivery or injection period.

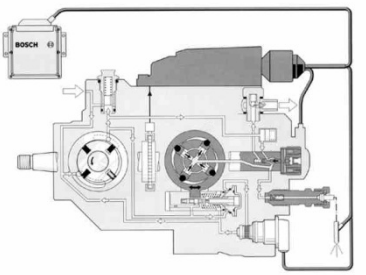

High pressure stage

Injection Period The delivery or injection period starts when the solenoid valve is closed. This occurs at the beginning of the injection period when the high-pressure plungers are at bottom dead centre on the cam lobes. At this point, they are just beginning to be forced inwards for high-pressure generation. Fuel injection continues whilst the valve is closed.

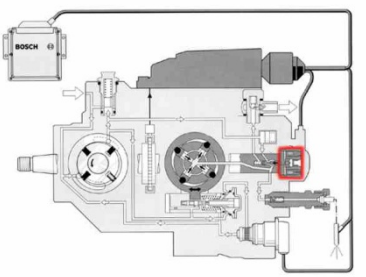

Solenoid valve

End of the Delivery The end of the delivery or injection period occurs when the solenoid valve is opened. A return compression spring in the rotor acts on the valve to open it, when the signal current from the pump electronic control unit is switched off. The pressure in the high-pressure chamber, rotor bores and delivery pipes to the injectors is dissipated to the inlet side of the high-pressure pump. Pressure surges are controlled by an accumulator in the low-pressure inlet.

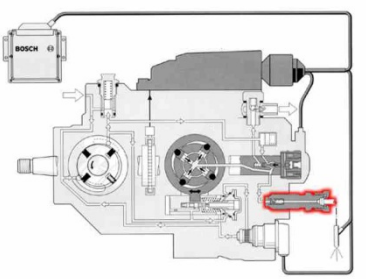

Injection line fitting

Engine ECU and Pump ECU The quantity of fuel that is metered for injection at any time is computed by the engine ECU, which sends signals to the injection-pump ECU for control of the high-pressure solenoid valve. The electrical current for operating this valve is high and the two electronic control units are separated, in order to avoid high current interference, in the more electronically vulnerable engine ECU.

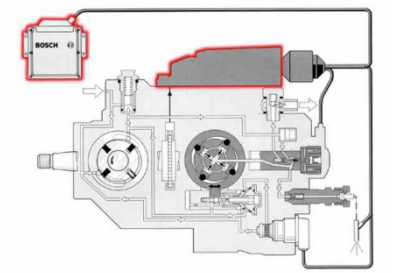

Electronic control units

Electronic Diesel Control Units The electronic diesel control units are provided with data signals from sensors and switches attached to the engine, the pump and other vehicle systems. The sensors are used for comparisons to programmed operating parameters and for calculations for metering the amount of fuel delivered and for controlling the injection advance.

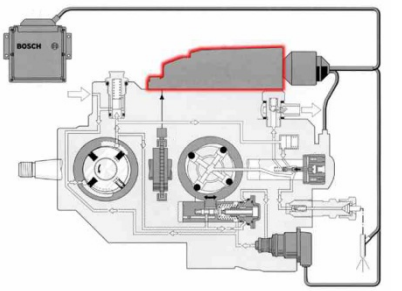

ECU

Injection Advance Mechanism Injection advance is obtained by rotation of the cam ring by pump body pressure in the injection advance mechanism. The injection advance mechanism consists of a transverse timing device piston and control components and an electrical solenoid valve. Maximum advance is 40º of crankshaft rotation.

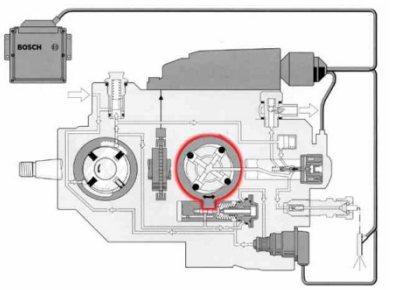

Cam ring

Timing Device Piston The timing device piston has a cut out section that locates a ball pivot on the cam ring. Hydraulic pressure from the vane-type supply pump is used to move and control the movement of the timing-device piston. Transverse movement of the piston causes the cam ring to move radially. The plungers, in the high-pressure pump, now come into contact with the cam lobes at an earlier or later time. This advances or retards the point of injection.

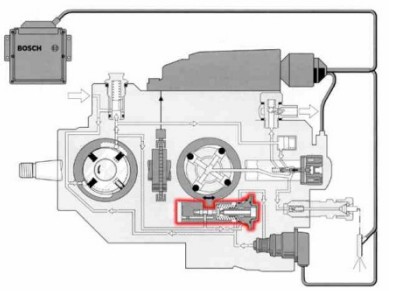

Timing device

Injection Points Movement of the timing-device piston occurs because of the increase in pump body pressure, which occurs with an increase in engine speed. The pressure is applied, as control pressure through a restriction, to the ring chamber of the hydraulic stop. When the solenoid valve is closed, hydraulic pressure is applied to the control plunger, which shifts to push the control collar to a position that allows fuel pressure to be applied to the timing device piston. Movement of the timing device piston is opposed by a return spring. Once this resistance is overcome, the piston moves to advance the point of injection.

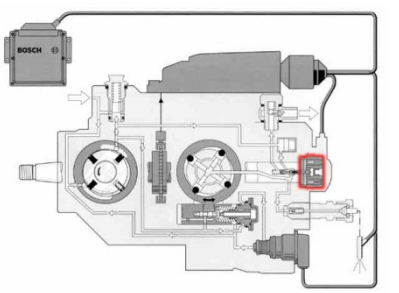

High pressure solenoid valve

Injection Advance Control of the injection advance is made by regulating the hydraulic pressure in the ring chamber of the hydraulic stop. Variation of the pressure, affects the relative position of the control plunger to the spill ports, in the piston control bore. This regulates the amount of pressure available behind the piston to move it in an advance direction.

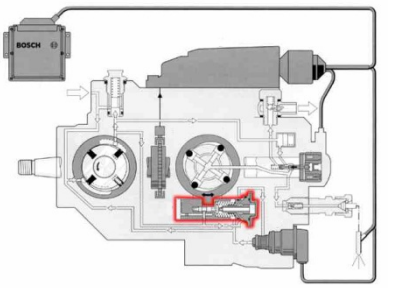

Timing device

Ring Chamber Pressure Control of the ring chamber pressure is made by releasing the pressure through the needle valve of the timing device solenoid valve. This valve opens and closes from actuating electrical pulses from the pump ECU. The signal pulses are calculated in the pump ECU and are based on data received from the system sensors.

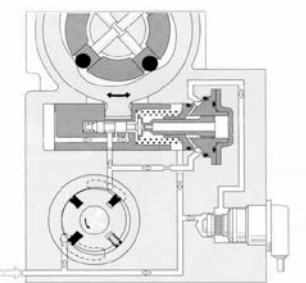

Timing device solenoid valve

Needle Motion Sensor The needle motion sensor sends a signal to the engine ECU at the instant of opening of the injector. This point, relative to the crankshaft rotational angle before top dead centre, is used for load and speed injection timing calculations and for control of the exhaust gas recirculation valve.

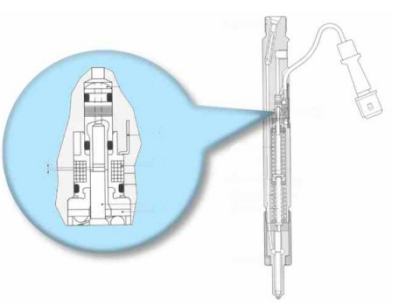

Injector and motion sensor

Angular Position of the Cam Ring The angle-of-rotation sensor is fitted inside the pump. It consists of a finely toothed trigger wheel on the pump spindle and an inductive sensor on the cam ring. The sensor signals are used to define the actual angular position of the cam ring. The large tooth gaps on the trigger wheel are positioned to provide cam lobe to plunger position for start of injection for each cylinder. The inductive pick-up of the angle-of-rotation sensor is fitted to the ring cam, so that the data provided is always specific to the point of injection. Its main function is to control the actuation of the high-pressure solenoid at the start of injection.

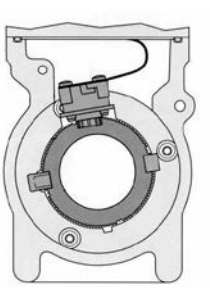

Angle-of-rotation sensor

Summary The Bosch, VR electronic diesel control system, uses a number of sensors and control actuators. This allows it to achieve optimum performance. A range of other sensors and actuators are used.

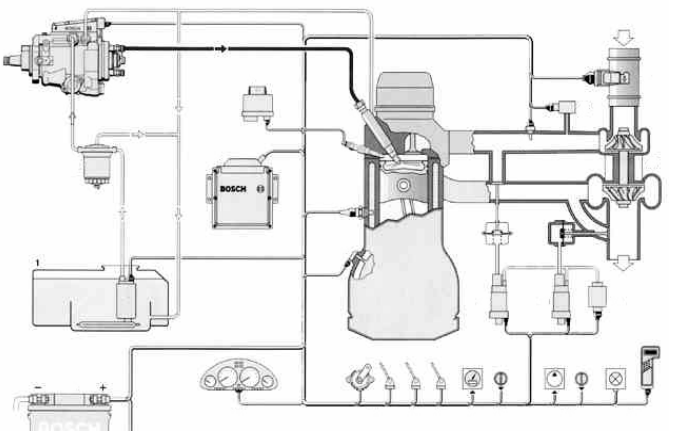

System overview

Describe briefly the operation of the Bosch VR injection system.

Look back over the previous section and write out a list of the key bullet points here:

Bosch CR system

Bosch Common Rail Fuel Injection The development of diesel fuel systems is continuing, with many new electronic changes to the control and injection processes. One of the latest developments is the Bosch CR 'common rail' system, operating at very high injection pressures. It also has piloted and phased injection to reduce noise and vibration.

Common rail system

Common Rail System The common rail system has made it possible, on small high speed diesel engines, to have direct injection when previously they would have been of indirect injection design. These developments are showing improvements in fuel consumption and performance of up to twenty percent over the earlier indirect injection engines of a similar capacity. The common rail injection system can be used on the full range of diesel engine capacities.

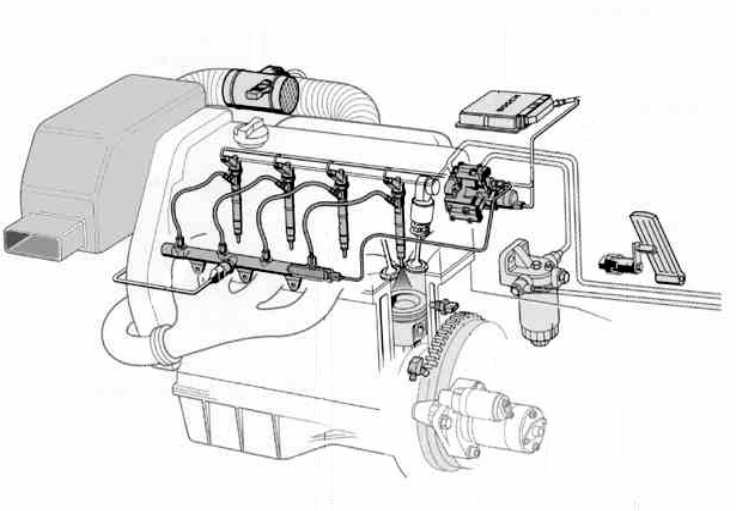

Four cylinder system

Pilot Injection The combustion process, with common rail injection, is improved by a pilot injection of a very small quantity of fuel, at between 40º and 90º btdc. This pilot fuel ignites in the compressing air charge so that the cylinder temperature and pressure are higher than in a conventional diesel injection engine at the start of injection. The higher temperature and pressure reduces ignition lag to a minimum, so that the controlled combustion phase during the main injection period, is softer and more efficient.

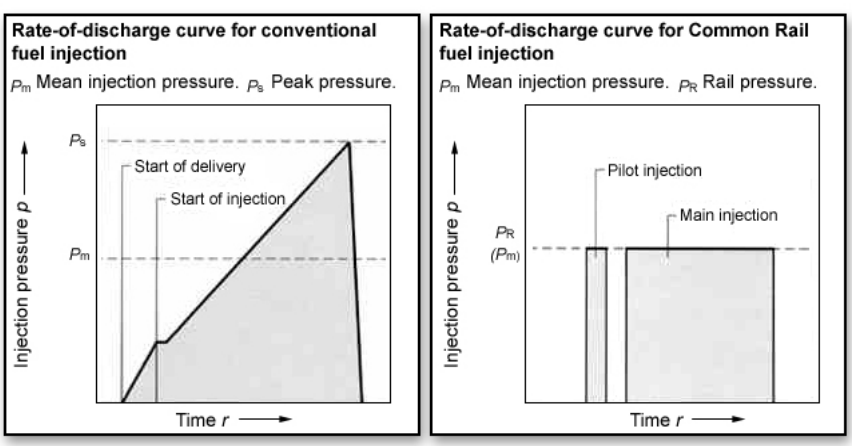

Conventional system Common rail system

Fuel Injection Pressures Fuel injection pressures are varied, throughout the engine speed and load range, to suit the instantaneous conditions of driver demand and engine speed and load conditions. Data input, from other vehicle system ECUs, is used to further adapt the engine output, to suit changing conditions elsewhere on the vehicle. Examples are traction control, cruise control and automatic transmission gearshifts.

Electronic Diesel Control The electronic diesel control (EDC) module carries out calculations to determine the quantity of fuel delivered. It also determines the injection timing based on engine speed and load conditions. The actuation of the injectors, at a specific crankshaft angle (injection advance), and for a specific duration (fuel quantity) is made from signal currents from the EDC module. A further function of the EDC module is to control the accumulator (rail) pressure.

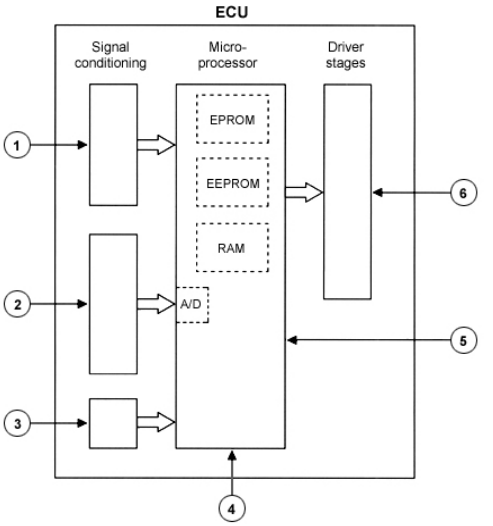

Signal processing in the ECU

List the benefits of electronic diesel control and CR systems in general

Common Rail – Component Groups The Bosch CR common rail diesel fuel injection system, for light vehicles, consists of four main component areas. These are the low pressure delivery, high pressure delivery with a high pressure pump and accumulator (rail), the electronically controlled injectors and electronic control unit and associated sensors and switches.

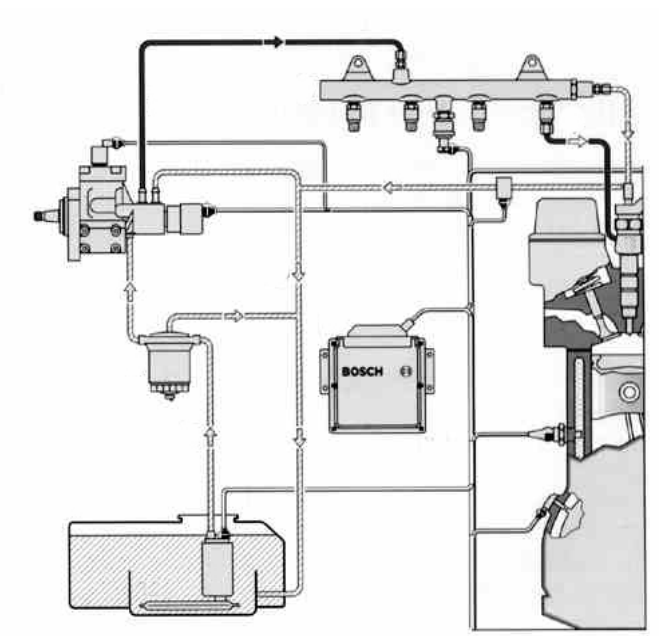

Main components

Low Pressure Delivery The low pressure delivery components are the fuel tank, a pre-filter, pre-supply (low pressure) pump, a fuel filter and the low pressure delivery pipes to the high pressure pump and for excess fuel return. The low pressure pump, depending on application, can be of the roller cell type and be fitted in either the fuel tank, or in-line where it is mounted to the vehicle body close to the fuel tank. Where the pump is fitted in the fuel tank, it includes a pre-filter and has the fuel gauge sender unit attached to the same attachment flange on the side or top of the fuel tank.

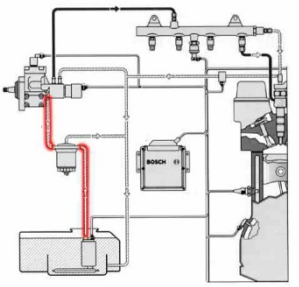

Low pressure components

Fuel Pump The electrical supply to the fuel pump is made, either directly, or through a relay from the electronic diesel control module. An inertia switch is generally used to cut the electrical current to the pump motor in an accident. On some vehicles, a gear type pump may be incorporated into the high pressure pump and be driven from a common drive shaft. It can be a separate pump attached to the engine with a geared drive from the camshaft or crankshaft. The low pressure delivery pipes connect to a fuel filter and water trap. A continuous flow of fuel runs through the filter and primes the high pressure pump or returns to the fuel tank.

High Pressure Pump The high pressure pump is driven from the engine crankshaft through a geared drive at half engine speed and is fitted where a conventional distributor pump would be. It can also be fitted on the end of the camshaft housing and be driven by the camshaft. It is lubricated by the diesel fuel that flows through it.

High Pressure Fuel Injection The pump has to produce all of the high pressure for fuel injection. It is a triple piston radial pump, with a central cam for operation of the pressure direction of the pistons and return springs to maintain the piston rubbing shoes in contact with the cam. The pump has a positive displacement with inlet and outlet valves controlling the direction of flow through the pump.

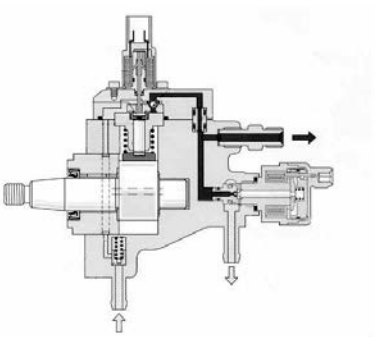
High pressure pump

Pump Delivery Rate The pump delivery rate is proportional to the speed of rotation of the engine so that it meets most engine speed requirements. To meet the engine load requirements the pump has a high volume. To meet the high pressure requirements, for fine atomisation of the fuel on injection, the pump can produce pressures of up to 1350 bar. A pressure control valve returns excess fuel to the fuel tank.

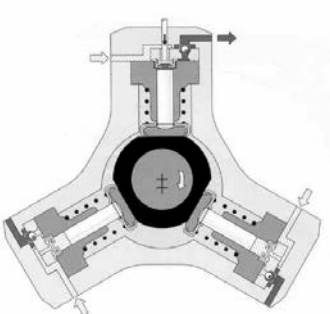
Pumping elements

Controlling Pressure The pressure control valve is a mechanical and electrical unit. It is fitted on the pump or the high pressure accumulator (rail). The mechanical part of the valve consists of a compression spring that acts on a plunger and ball valve. The electrical component is a solenoid that puts additional and variable force to the ball valve. The solenoid is actuated on signal currents from the EDC module. When the solenoid is not actuated, the ball valve opens at 100 bar against the resistance of the compression spring. This spring valve smoothes some of the high frequency pressure fluctuations produced by the pump.

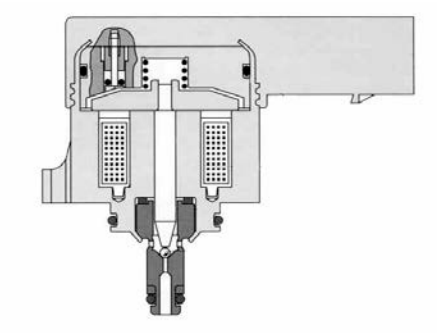

Pressure control valve

Setting a Variable Mean Pressure The solenoid in the pressure control valve is used for setting a variable mean pressure in the high pressure accumulator (rail). The pressure in the rail is measured by a sensor and compared with a stored map in the EDC module for the current engine operating conditions. In order to increase the fuel rail pressure an electrical alternating current is applied to the solenoid. The energising current is varied by the EDC module, so that the additional force on the ball valve produces the required fuel rail pressure.

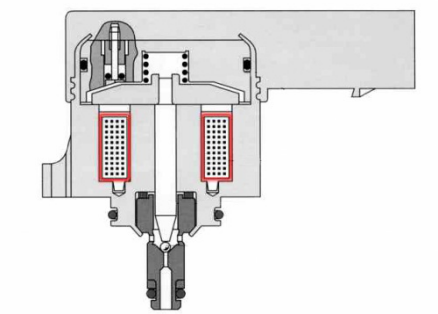

Solenoid

High Pressure Accumulator Rail The high pressure accumulator (rail) is common to all cylinders and derives its name 'common rail' from this. This term is used in preference to fuel rail, which is used for petrol engines. The rail is an accumulator because it holds a large volume of fuel under pressure. The volume of fuel is sufficient to dampen the pressure pulses from the high pressure pump. Fitted to the high pressure accumulator are an inlet from the high pressure pump and flow limiter valves in each of the outlets for the cylinders. A pressure sensor and a pressure-limiter valve that returns fuel to the fuel tank, if excess fuel pressure occurs in the rail, is also fitted.

Preventing Continuous Injection There is a flow limiter valve on the high pressure outlets to the injectors for each of the engine cylinders. The flow limiter valve is needed to ensure that continuous injection cannot occur if an injector nozzle remains open. The flow limiter valve consists of a spring-loaded hollow plunger, with narrow throttle holes between the inlet and outlet ports.

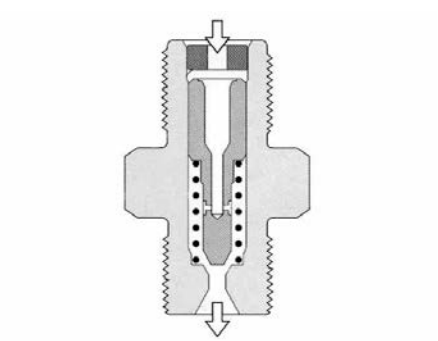

Flow limiter valve

Normal Operation of the Injector During normal operation the injector supply pipe, flow limiter valve and fuel rail are under the same pressure. When the injector opens, the pressure in the injector supply pipe drops, and the rail pressure pushes the flow limiter plunger towards the outlet, and the seat of the valve. At the end of injection, fuel flows through the narrow throttle holes and the pressure equalises, so that the return spring pushes the plunger back to its stop. This cycle continues for normal injection.

Drop in Pressure If a large leak in the high pressure fuel pipe or the injector occurred, the flow limiter valve would operate. The drop in pressure on the outlet side will cause a pressure differential, which is sufficient to push the plunger into the closed position of the valve. It will hold it in this position until the fuel rail pressure is released.

Rail Pressure The rail pressure sensor is a very accurate electronic unit, with an error value of less than 2%. It consists of an integrated electronic element with a diaphragm and evaluation circuit. The diaphragm, which is open to fuel rail pressure, is a layered semiconductor. It distorts when fluid pressure is applied to it. The evaluation circuit measures the resistance changes in the diaphragm. When it distorts it converts the electrical value to a range between 0.5 and 4.5 V. The signal is supplied to the EDC module.

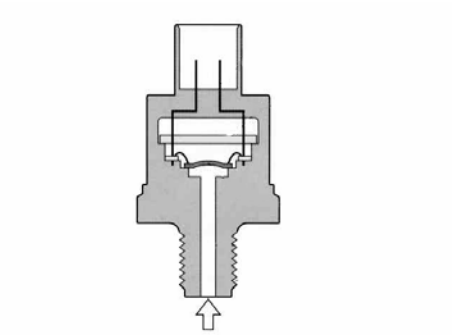

Rail pressure sensor

Monitoring of Rail Pressure The fuel rail pressure is closely monitored in the EDC module. This is because the changes in fuel pressure affect the quantity of fuel delivered within a set time range. The EDC module sends actuating signal currents to the pressure control valve solenoid, to hold the instantaneous pressure at the appropriate map value. The pressure limiter valve is fitted in the end of the fuel rail. It is a spring-loaded plunger type valve and opens, at a pre-determined value, set by the compression of the return spring. Fuel pressure opens the valve so that excess fuel is able to return to the fuel tank through the fuel return pipes.

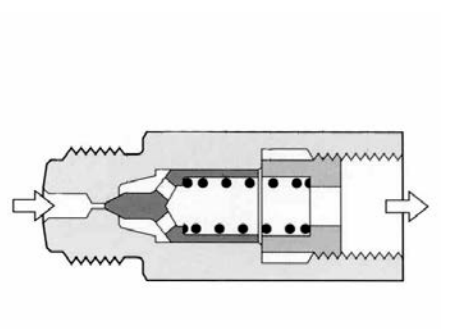

Pressure limiter valve

Electronic Controlled Injectors The injectors on the common rail system have nozzles that are similar to all other diesel injectors for direct injection engines. The nozzle needle seats in the nozzle to obstruct the holes in the tip where the fuel is injected into the combustion chamber. The nozzle needle is held closed by a compression spring and opened by hydraulic pressure. Opening and closing of the injector is controlled, not by high pressure fuel pulse from an injector pump, as in a conventional rotary distributor pump, but by actuation of an electrical solenoid in the injector body. This is controlled by the electronic diesel control module. A permanent high pressure is maintained in the injector at the same pressure as the rail.

Plunger and Nozzle Needle Operation The plunger and nozzle needle are normally held closed by a compression spring. An electrical signal current from the EDC module actuates the solenoid so that the control valve opens. Fuel, under pressure, leaves the valve control chamber and passes through the bleed orifice into a large chamber around the solenoid armature. The pressure in the control chamber drops and the pressure in the pressure chamber below the control plunger is now greater. This lifts the plunger and needle. The injector nozzle opens and fuel is injected into the combustion chamber. As soon as the electrical signal current from the EDC module ceases, the control valve closes. Operation of the injector is controllable for very small intervals of time.

Summary The electronic control of the common rail diesel injection system has three main component groups. These are the sensors and switches and other system ECUs that provide data, the EDC module that analyses and calculates the system requirements, and the actuators for diesel fuel delivery and emission control functions. The main sensors for calculation of the fuel quantity and injection advance requirements are the accelerator pedal sensor, crankshaft speed and position sensor, air-mass meter and the engine coolant temperature sensor. This diagram shows a system overview for the Bosch common rail system.

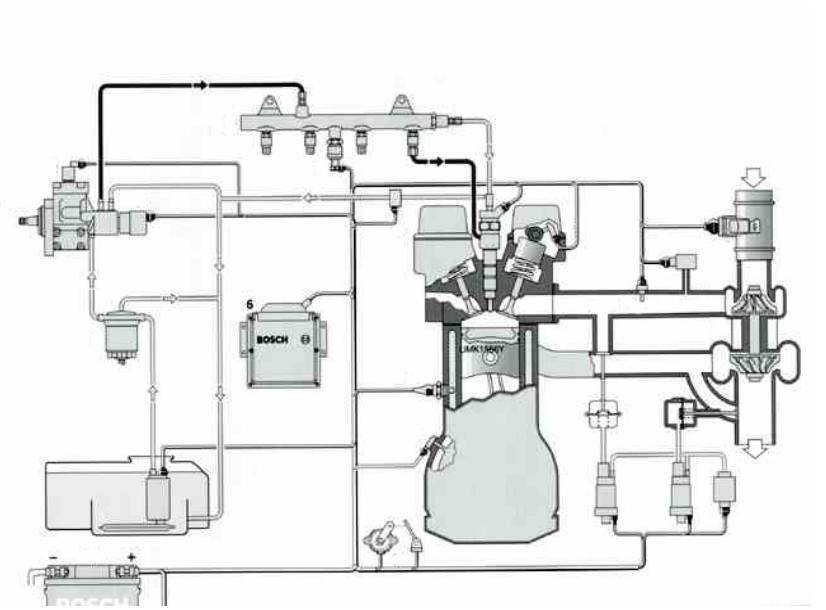

System overview

Describe briefly the operation of the Bosch CR injection system.

Look back over the previous section and write out a list of the key bullet points here:

Lucas EPIC system

Lucas Distributor Fuel Injection Pumps – EPIC

EPIC stands for Electronically Programmed Injection Control. The EPIC rotary distributor type injection pump has fewer mechanical parts than the older types. All data inputs to the EDC module, including driver demand via a potentiometer connected to the accelerator pedal, are made from a series of switches and sensors. The EDC module computes the optimum fuel requirement and injection timing for all engine operating conditions and controls the exhaust gas recirculation system.

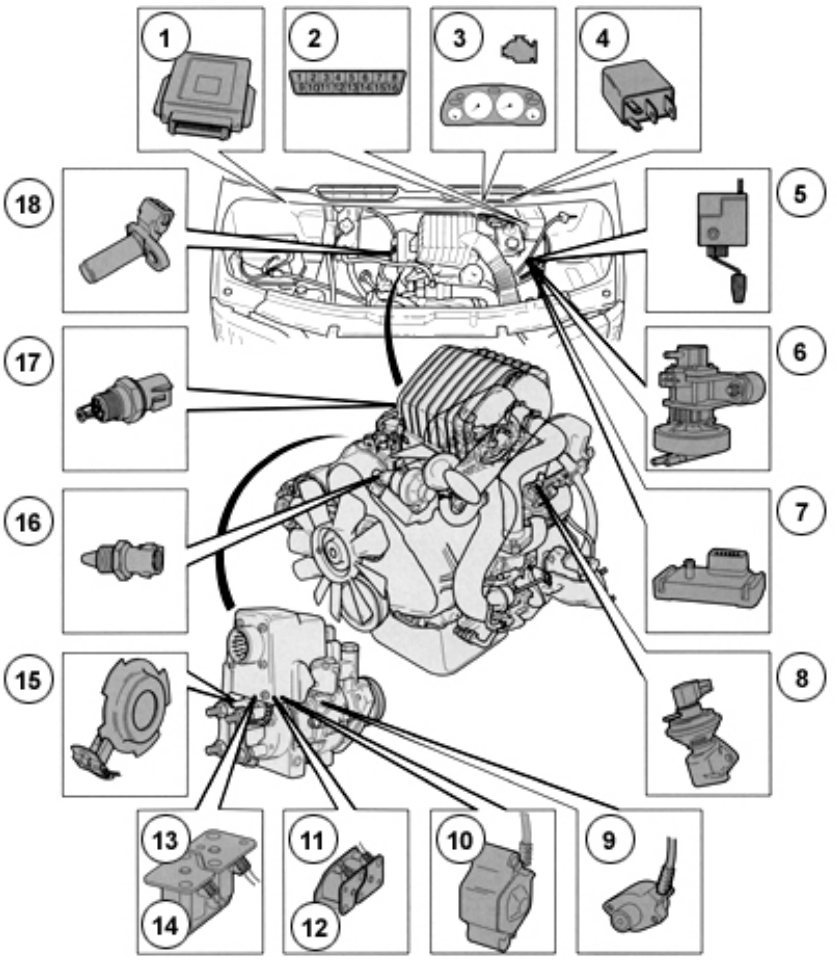

Pump, sensors and EDC

Pump Operation Transfer pressure is produced with a vane pump and regulated by a speed proportional pressure regulating valve. A positive pump body pressure of about 50 kPa (0.5 bar) is obtained with a pressure holding valve in the fuel return outlet of the pump. High pressure is produced by two pairs of opposing plungers. Fuel metering and timing control is made by pulsed signals to electromagnetic regulating solenoids. The solenoids are similar in construction for both operations. They consist of a winding and an armature fitted with the valve plunger.

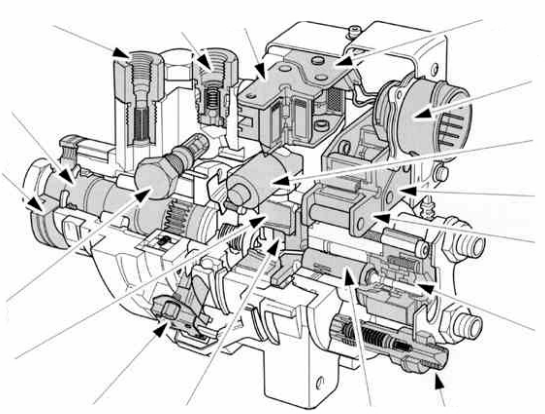

EPIC pump

Hydraulic Pressure The solenoids regulate hydraulic pressure by closing the valves when actuated by signal currents from the EDC module. Hydraulic pressure opens the valves when the signal current ceases. The solenoids operate with pulsed signals or pulses of variable duration depending on application. An electromagnetic shut-off valve is used to stop the engine by sealing the passage of fuel to the high pressure plungers.

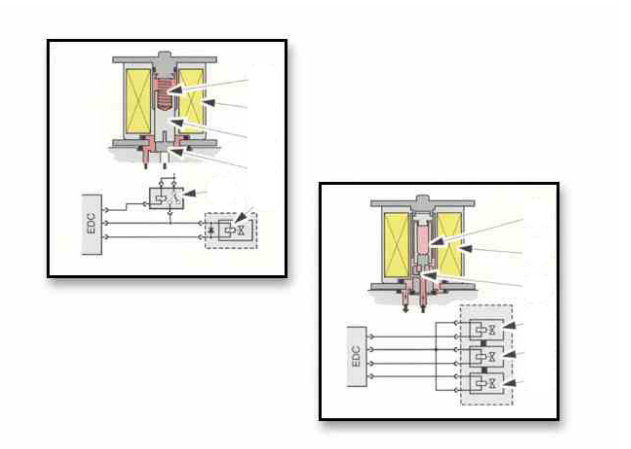

Regulating valve and Electromagnetic shut off valve

Main Functional Areas This diagram shows the hydraulic circuit inside the EPIC fuel injection pump. It is possible to identify the main functional areas. These are the low pressure pump priming and transfer pressure, high pressure generation, fuel metering and injection timing control. Additional control is provided by the high pressure rotor position sensor for fuel metering and by the cam ring position sensor for injection timing.

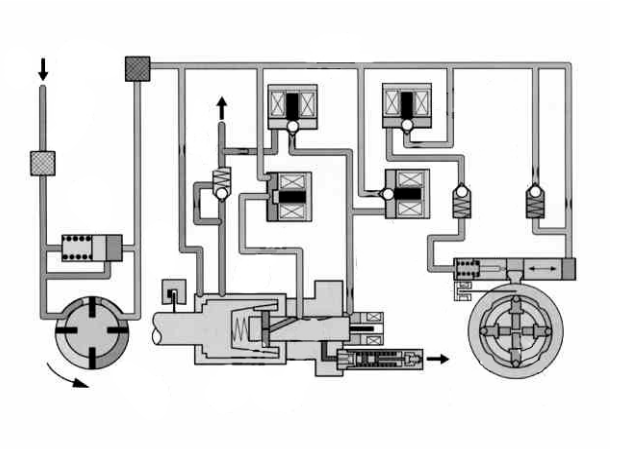

Injection pump

Fuel Metering The high pressure for fuel injection is produced by the closing of opposing plungers, when their roller shoes are pressed inward by the internal face of the cam ring. The plungers sit in bores in the distributor rotor and are connected with drillings to the transfer pressure feed and high pressure outlets in the distributor head. The rotor is driven by the driving shaft through four slots, into which the roller shoes on the rotor are positioned. The inner bore of the driving shaft is tapered, as are the roller shoes. The taper limits the amount of plunger movement from the maximum position at the wide end to minimum at the narrow end.

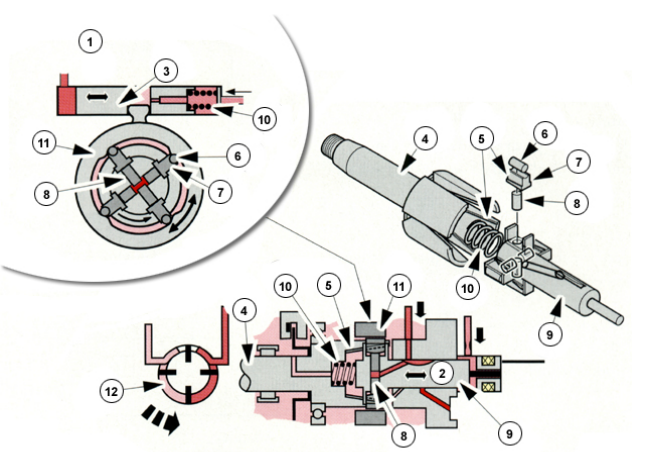

High pressure production

Control of Fuel Quantity The rotor is moved into and out of the driving shaft taper by hydraulic pressure at one end and a compression spring at the other. The compression spring is fitted between the driving shaft and the rotor, so that the maximum delivery position is achieved when no pressure is applied to the rotor. This provides maximum fuel delivery for engine starting. As soon as the engine starts, transfer pressure is applied directly to the rotor, which moves to the minimum fuel position for engine idle.

High Pressure Plungers Metering of the fuel is made by varying the opening value of the high pressure plungers. The internal taper in the driving shaft and the taper on the roller shoes provide the full range of plunger travel values. By moving the rotor axially into and out of the taper, precise fuel quantities can be metered. A compression spring is used to push the rotor away from the driving shaft towards the maximum plunger travel position. Hydraulic pressure in opposition to the compression spring is used to push the rotor towards the minimum plunger travel position.

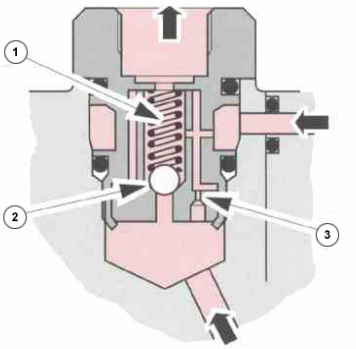

Pressure holding valve

Fuel Metering Control Control of the hydraulic pressure acting axially on the rotor is made by filling or discharging the hydraulic chamber at the end of the rotor. Two electromagnetic valves are used for this. The two valves are actuated by signals from the EDC module. Only one of the valves is operating at any one time. Hydraulic flow through the fuel metering control solenoid valves is made from the transfer pump to the feed valve and into the pressure chamber at the end of the rotor. It then flows out through the discharge valve and drilling to the pump outlet in the pressure holding valve. Damping of this hydraulic circuit is achieved with restriction inserts in front of the regulating valves.

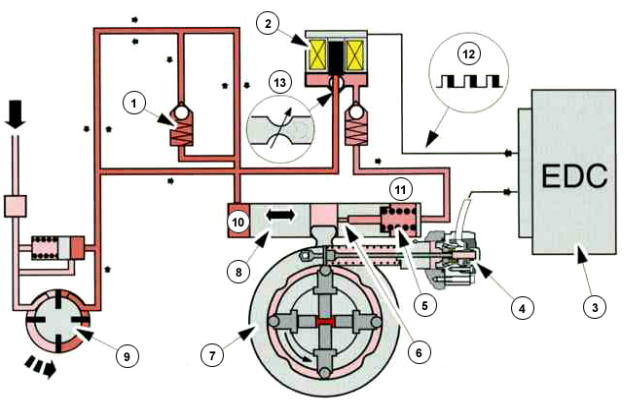

Control pressure

Rotor Position The rotor position is monitored by the EDC module from electrical signals returned by a rotor position sensor. The rotor is fitted with an armature that moves into and out of an electrical coil winding forming an inductive sensor. The armature axial travel, in the inductive coil, produces a range of electrical values for all rotor positions. These are compared in the EDC module to the engine speed and load requirements from driver demand and a map of calculated settings.

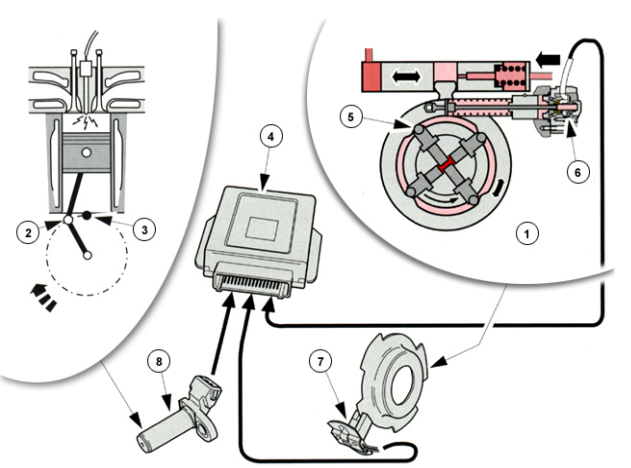

Rotor position sensor

Monitoring of Engine Performance The EDC monitors the engine performance. It calculates, for any variations in the rotor position, whether to increase or decrease the metered fuel delivery. Metered fuel delivery changes are made by actuation of the feed and discharge valves to vary the quantity of fuel in the rotor chamber. These valves are opened by a pulse signal from the EDC module, so that adjustments are made when the rotor is not in a high pressure generating position. The rotor can be moved from the maximum to the minimum position within two engine revolutions when running at idle. The idle speed can be controlled to avoid uneven running.

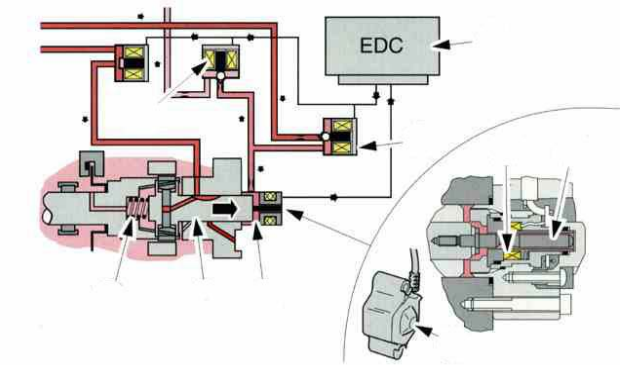

Electronic control

Injection Timing Control The fuel injection timing is adjusted hydraulically by rotation of the cam ring. The cam ring is fitted with a ball pin that sits between two plungers in the automatic timing control unit. Transfer pressure is applied to the adjusting plunger so that the cam ring rotates to advance the timing. Acting in opposition to the adjusting plunger, is another plunger, which is moved to retard the timing by a compression spring and a control pressure, derived from transfer pressure. Non-return valves and restriction inserts in the feed and return circuits to the two plunger chambers, prevent the cam ring being pushed round, when the roller shoes come into contact with the cam lobes.

Electro-magnetic Regulating Valve The electromagnetic regulating valve is opened by signal pulses from the EDC module. Calculation of the optimum injection timing position is made by comparison with a programmed map for sensor signal values for engine speed and load, engine and fuel temperature and feedback for closed loop control by a cam ring position sensor.

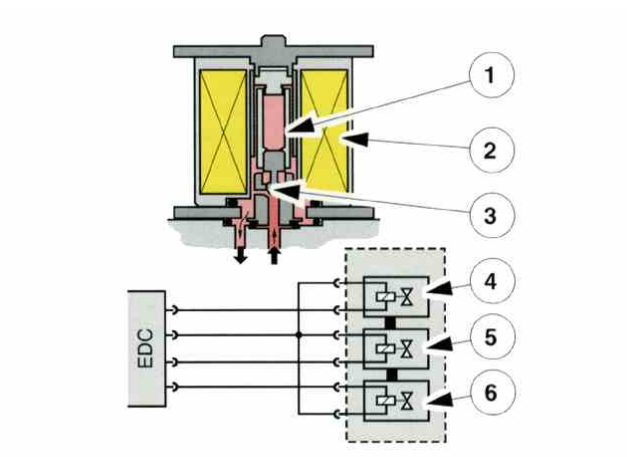

Summary When the engine is switched on with the ignition switch, the EDC module actuates the power holding relay to supply power for the actuators. When the engine and ignition is switched off, the EDC module runs through test routines and stops the engine by switching off the power holding relay. When the engine is running the EDC module receives a continuous stream of data signals from the sensors and compares these with programmed data. The EDC module calculates and sends the required signal currents to the actuators.

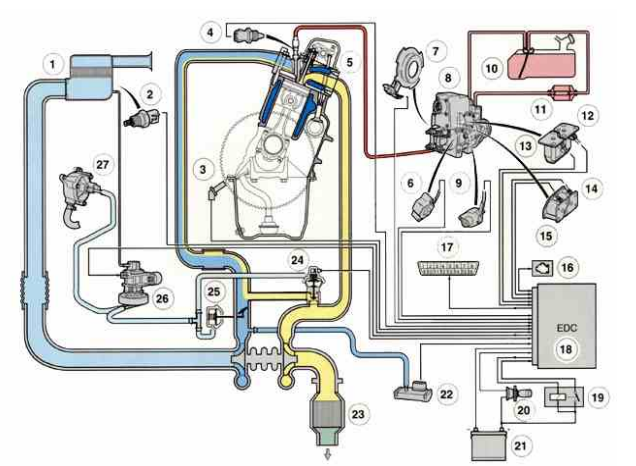

Overview of the EPIC system

Describe briefly the operation of the Lucas EPIC injection system.

Look back over the previous section and write out a list of the key bullet points here:

Unit injection system

Unit Injector System Unit injectors are like individual injection pumps. They are operated by an engine driven cam. The Bosch PDE system uses unit injectors. The injectors are electronically controlled by an electrical solenoid. This allows control of injection advance and fuel quantity.

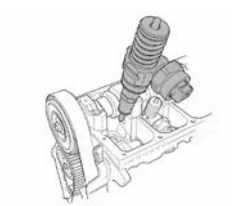

Injector and system

Fuel Pressure Generation The fuel pressure is generated inside the injector by a pump driven from an overhead cam and rocker. The injector is installed in the cylinder head with the injector nozzle in the combustion chamber. The electronic control is similar to the Bosch common rail system. It uses phased injection by signal currents in a duty cycle from the EDC module to a solenoid valve. This valve controls the high pressure above and below the nozzle needle and plunger.

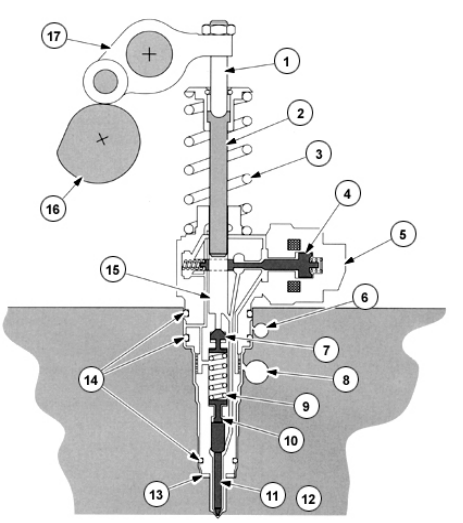

Design of the unit injector

Fuel System The fuel system comprises the fuel feed and return pipes, a low pressure fuel delivery pump, the unit injectors and the electronic components. These are sensors, switches, the EDC module and the actuators.

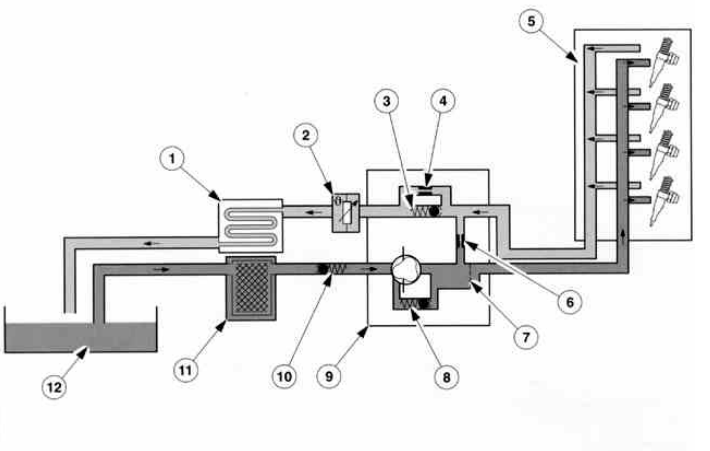

System overview

Fuel Pump The fuel pump is fitted to the cylinder head and is driven from the end of the camshaft. The vacuum pump is attached to the fuel delivery pump and shares the same drive from the camshaft. The fuel pump incorporates two pressure-limiting valves to maintain the fuel feed to the unit injectors at 7.5 bar.

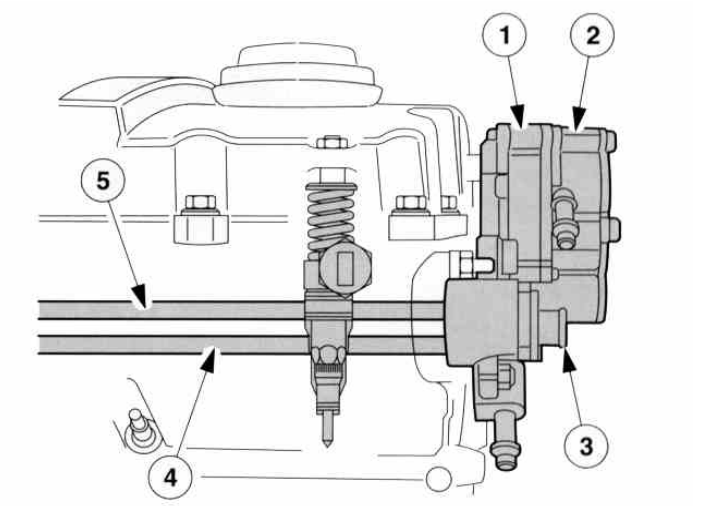

Pump position

Pump Operation The pump has two opposing pumping plungers operated by a three-lobe cam, so that it provides continuous and smooth delivery of fuel. The fuel feed from the fuel tank includes a non-return valve and a fuel filter with water trap. One of the pressure-limiting valves controls the delivery supply pressure by providing a return flow for excess fuel to the inlet side of the pump. The second pressure-limiting valve is in the fuel return bore in the pump. The fuel delivered from the pump passes into a fuel rail in the cylinder head for delivery to the unit injectors.

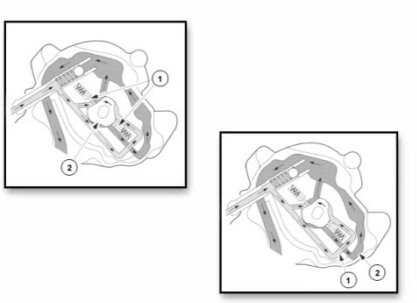

Fuel induction and delivery

Return Fuel Return fuel from the fuel rail for the unit injectors passes through the return bores in the fuel pump. It passes through the pressure-limiting valve or a by-pass throttling bore and then a fuel cooler before returning to the fuel tank. Additionally, a throttling bore, between the feed and return sides of the pump and the return side throttle timing valve by-pass, allow a constant return of fuel to the tank for cooling purposes. A fuel temperature sensor is fitted in the fuel return. The fuel rail is constructed to keep fuel temperatures as low as possible and to supply each injector with fuel at the pressure and temperature.

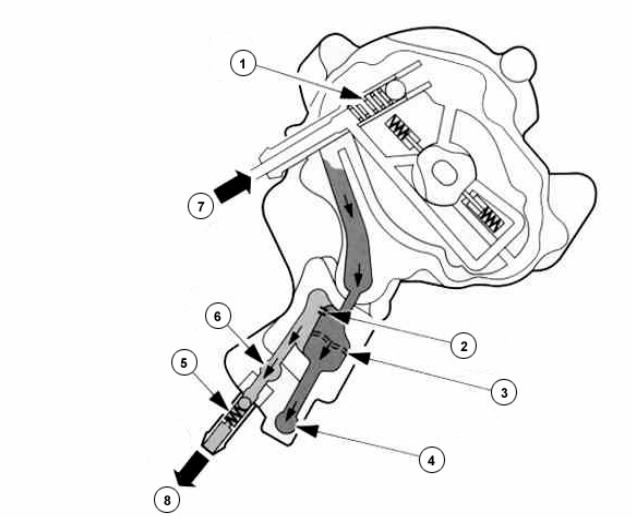

Return of fuel from cylinder head

Injection Process The injectors consist of the high-pressure pump, the injector nozzle and the needle assembly and the solenoid valve. The electronic control gives a pre-injection of a very small quantity of fuel to pre-heat the air charge. This results in smoother and more efficient combustion during the controlled phase of injection and combustion.

Pump Element The pump element consists of a plunger in the pump bore of the high-pressure chamber. The pump plunger is lifted by a return compression spring and pressed into the pump for high pressure generation by an eccentric cam, on a camshaft driven at half-engine speed. The pump chamber is charged by the pressure in the fuel rail. The supply of fuel from the fuel rail and the return of excess fuel to the fuel rail are controlled by a solenoid valve. The valve seat closes a port between the fuel rail and the pump chamber. An open port feeds the injector nozzle needle high-pressure chamber.

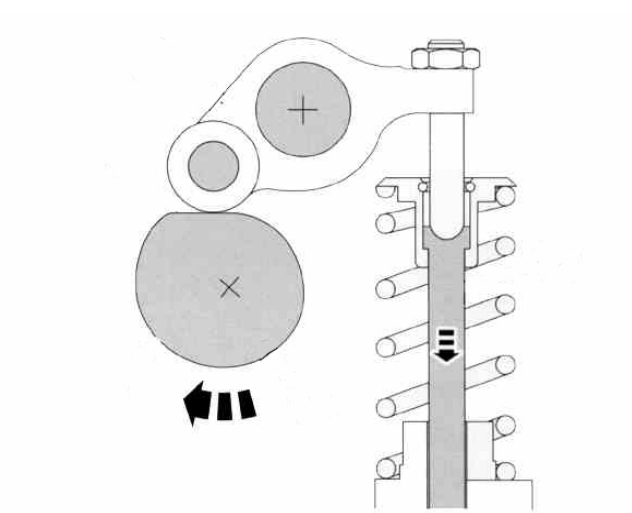
Drive of the unit injector

Fuel Under High-Pressure When the solenoid valve is closed fuel under high-pressure is applied to the pressure chamber and acts on the needle to lift it from its seat, so that fuel is injected into the combustion chamber. A compression spring holds the needle in the closed position until sufficient hydraulic pressure is applied to open the nozzle. A damper is used to control the lift of the needle during pre-injection. The injection pressures vary from 150 to 2050 bar, depending on the engine operating conditions.

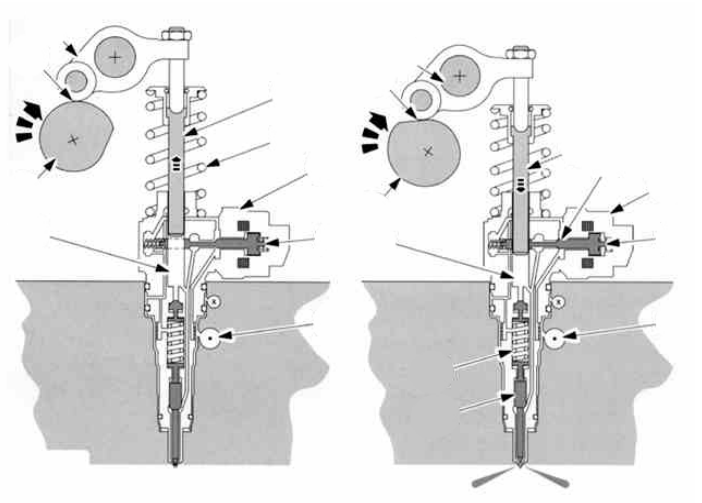

Filling and start of pre-injection

End of Injection As soon as the solenoid valve is opened, the high pressure dissipated back to the fuel rail and injection ends. The opening and closing of the solenoid valve controls the injection advance and the quantity of fuel delivered, depending on the time that the solenoid valve remains closed. Fuel is returned through return bores in order to provide cooling for the injectors, to carry away leakage from the pump plunger and injector, and to remove any vapour bubbles that may have formed in the fuel supply.

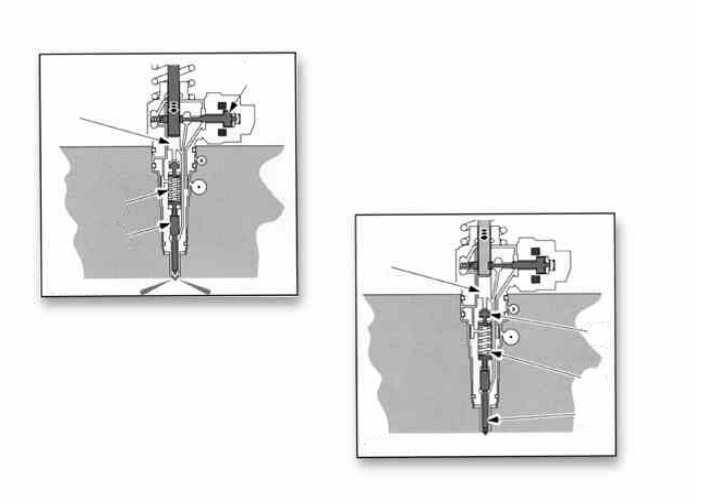

End of pre-injection and start of main injection

EDC Module The EDC module calculates the opening and closing positions of the unit injector solenoid valve from data supplied from a range of sensors, switches and inputs from other system ECUs. These sensors, switches and inputs from other systems are similar to other electronic diesel systems. The calculations in the EDC module are used to operate actuators for the unit injector solenoid valve, for the cold start glow plugs, for the EGR valve and manifold flap, and for turbocharger boost pressure control.

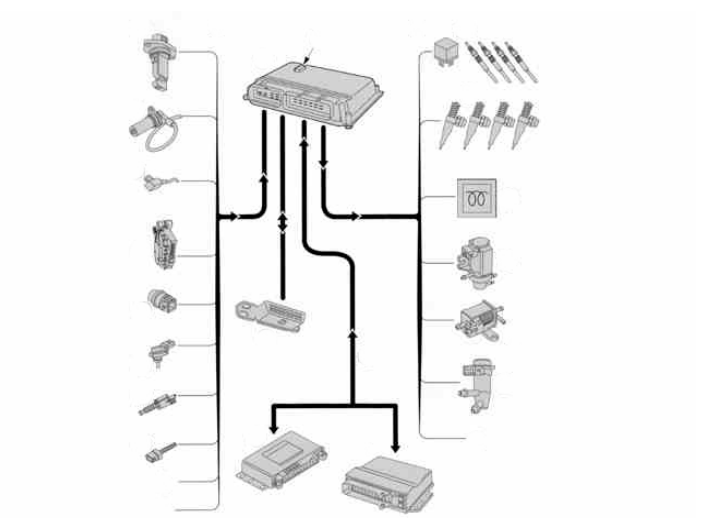

System overview

Describe briefly the operation of a unit injection system.

Look back over the previous section and write out a list of the key bullet points here:

Hybrid Vehicles – Integrated Motor Assist (IMA)

Introduction

Safety

Introduction Integrated motor assist (IMA) hybrid vehicles use high voltage batteries so that energy can be delivered to a drive motor or returned to a battery pack in a very short time.

The Honda Insight system, for example, uses a 144V battery module to store re-generated energy. This energy is then be used to drive the IMA motor. This decreases the load on the fuel engine, resulting in reduced emissions and increased efficiency.

The Toyota Prius originally used a 273.6V battery pack but this was changed in 2004 to a 201.6V pack, which reduced weight by 26%.

Clearly, there are safety issues when working with hybrid vehicles.

Danger Hybrid vehicle batteries and motors have high electrical and magnetic potential that can severely injure or kill if not handled correctly.

It is essential that you take note of all the warnings and recommended safety measures outlined by manufacturers and in this resource.

Any person with a heart pacemaker or any other electronic medical devices should not work on an integrated motor assist (IMA) system since the magnetic effects could be dangerous.

Honda Hybrid

It is essential that you take note of all the warnings and recommended safety measures outlined by manufacturers and in this resource.

Component location Most of the hybrid components are combined in the power unit (or integrated power unit, IPU). This is located behind the rear seats or under the luggage compartment floor. The unit is a metal box that is completely closed with bolts. A battery module switch is usually located under a small secure cover on the power unit. The electric motor is located between the engine and the transmission or as part of the transmission.

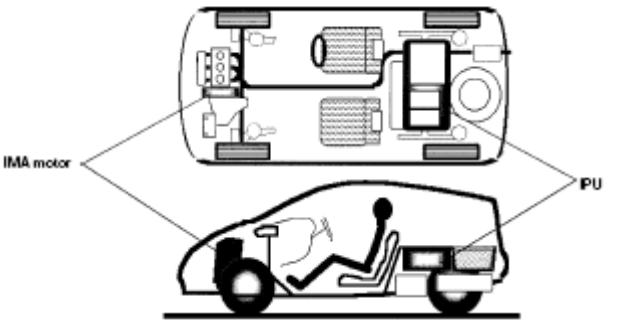

Motor and power pack locations

High voltage locations All high voltage components (except the motor) are located in the power unit. The electrical energy is conducted to or from the motor via three thick orange wires. Whenever these wires have to be disconnected, **SWITCH OFF** the battery module switch. This will prevent the risk of electric shock or short circuit of the high voltage system. High voltage wires are always orange.

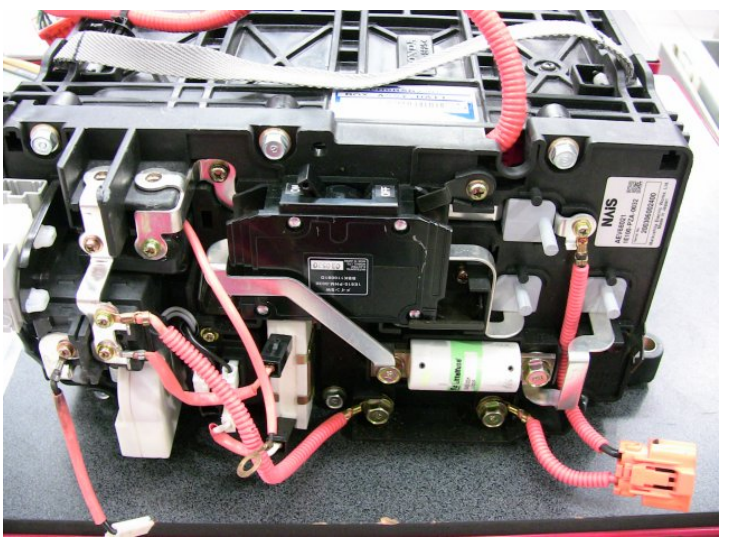

Honda battery pack (integrated power unit)

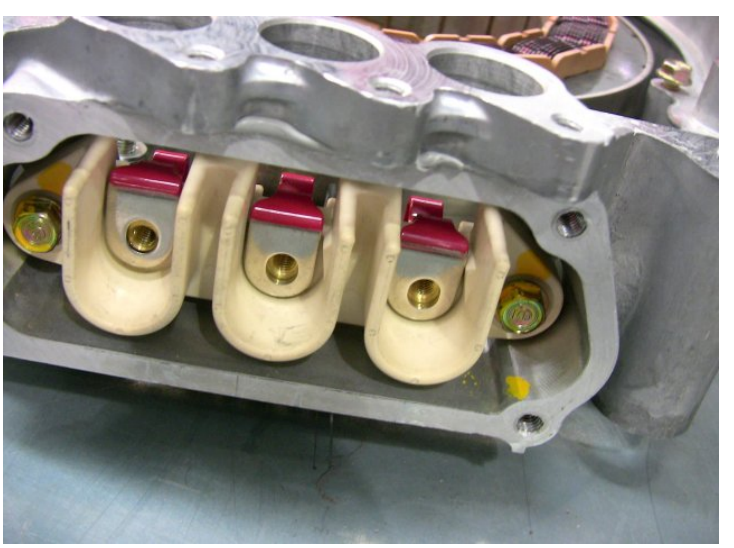

Motor power connections

Highly magnetic locations Any person with a heart pacemaker or any other electronic medical devices should not work on the IMA system. The magnetic fields present can affect these devices and is therefore a very significant danger.

The use of any magnetic storage media near the IMA system should be avoided. In the presence of the system's strong magnetic field, data could be partially or totally erased.

A mechanical or electronic wristwatch would also be damaged.

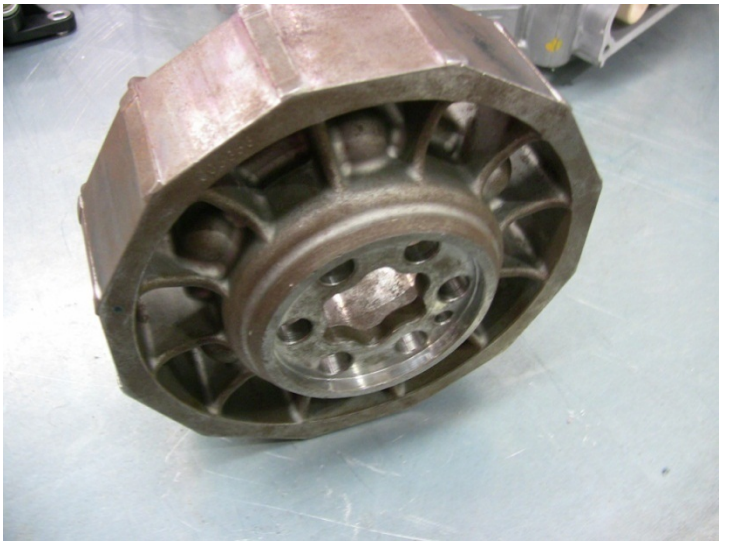

The core or rotor is made of very strong rare earth metal permanent magnets

Before maintenance

- Turn OFF the ignition switch and remove the key
- Switch OFF the Battery Module switch
- Wait for 5 minutes before performing any maintenance procedures on the system. This allows the large storage capacitors to be discharged
- Make sure that the junction board terminal voltage is nearly 0V.

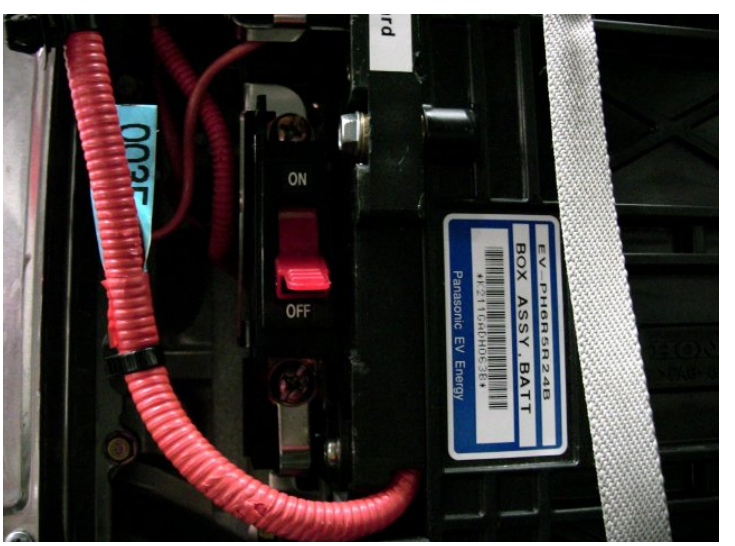

High voltage battery power switch

During maintenance

- Always wear insulating gloves
- Always use insulated tools when performing service procedures to the high voltage system. This precaution will prevent accidental short-circuits.

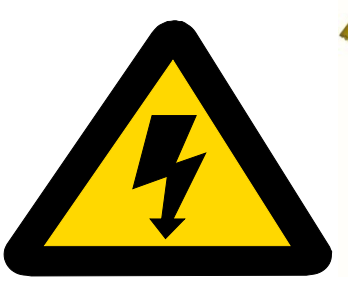

Electrical warning – and insulated gloves. Note these are

not the same as general working gloves

Interrupted maintenance When maintenance procedures have to be interrupted while some high voltage components are uncovered or disassembled, make sure that:

- The ignition is turned off and the key is removed
- The Battery Module switch is switched off
- No untrained persons have access to that area and prevent any unintended touching of the components.

Hybrid cars still use a normal 12V battery

After maintenance Before switching on the battery module switch make sure that:

- All terminals have been tightened to the specified torque
- No high voltage wires or terminals have been damaged or shorted to the body
- The insulation resistance between each high voltage terminal of the part you disassembled and the vehicle's body has been checked.

High voltage cables are always orange

Summary Working on hybrid vehicles is not dangerous **IF** the previous guidelines and manufacturers procedures are followed. Before starting work, check the latest information – **DON'T** take chances.

Honda hybrid

Look back over the previous section and write out a list of the key bullet points here:

System Overview

Overview A hybrid power system for an automobile can have a series, parallel or power split configuration. With a series system, an engine drives a generator, which in turn powers a motor. The motor propels the vehicle. With a parallel system, the engine and motor can both be used to propel the vehicle. Most hybrids in current use employ a parallel system known as Integrated Motor Assist (IMA). The power split has additional advantages but is also more complex.

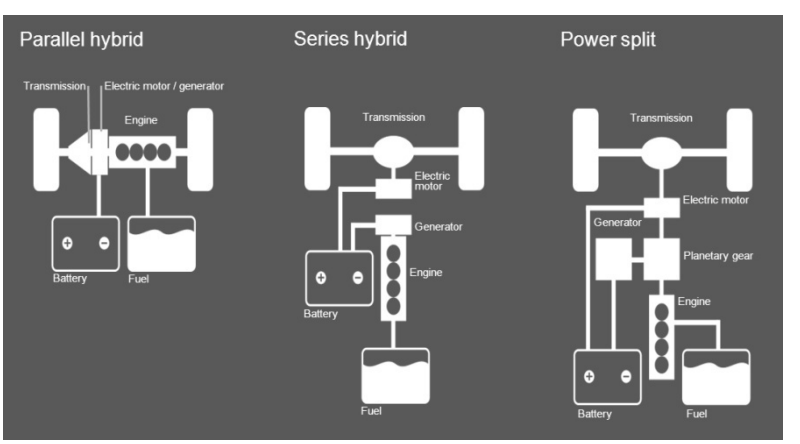

Three types of hybrid vehicles

Integrated Motor Assist (IMA) The IMA method is a technologically advanced parallel hybrid power system. By employing techniques such as brake-energy regeneration to maximize the efficiency with which energy is used, it

combines low-pollution, low-cost operation with high levels of safety and running performance. The main components of the system are:

- IMI motor
- Battery module
- Power drive unit (PDU)
- Motor control module (MCM)
- DC-DC converter

✍ Sketch the component layout here

Power split The Toyota Prius, for example, uses a splitting device that effectively allows a combination of series and parallel systems. The three main operating conditions are:

1. The high voltage battery provides power to motor 2 to drive the wheels.
2. When the wheels are driven by the engine via the power splitting device, generator 1 is also driven via the planetary gears to supply electricity to motor 2 to drive the wheels.
3. When the vehicle is decelerating, kinetic energy from the wheels is recovered, converted into electrical energy and used to recharge the battery by means of motor/generator 2.

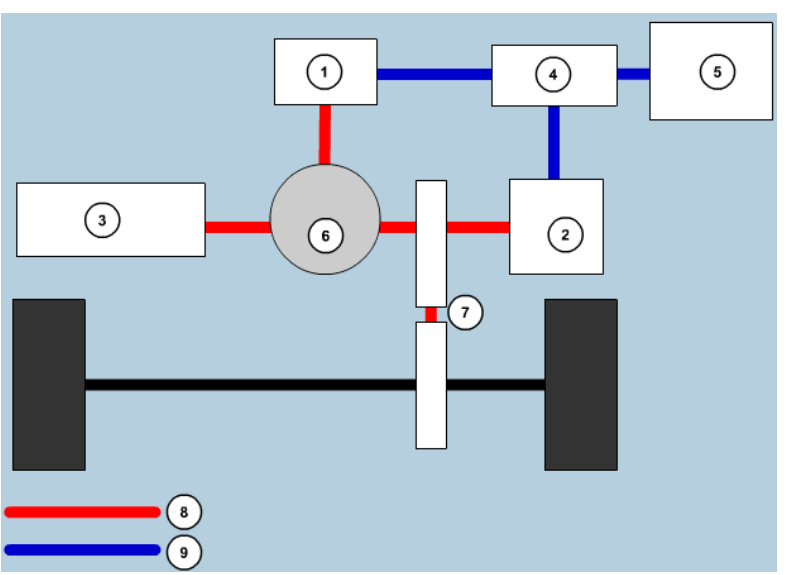

The Toyota Prius system

Power splitter This device is an epicyclic gearbox that transmits mechanical power between the Engine-Motor-Generator system.

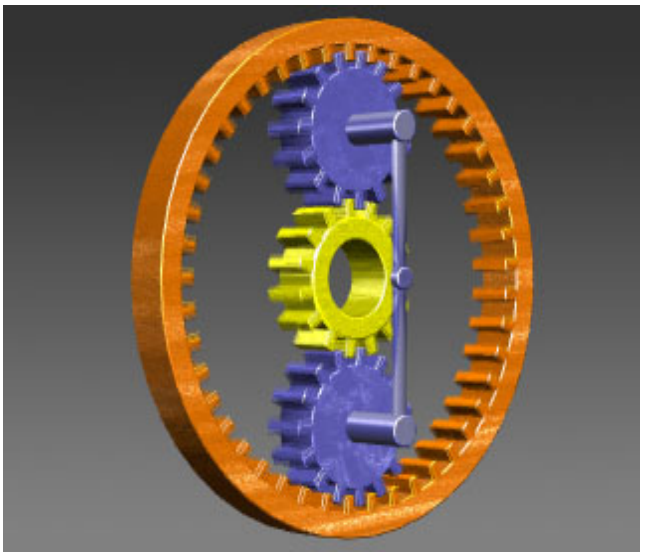

The splitter is a epicyclic gearbox

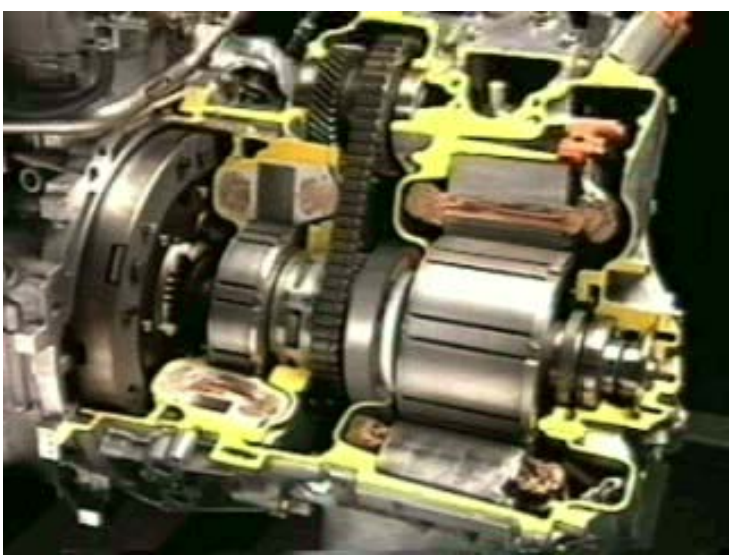

This cutaway shows the two motor/generators with the splitter and CVT in between (Source: Toyota)

Operating modes There are five main IMA operating modes:

- Start-up
- Acceleration
- Cruising
- Deceleration
- Idling

The diagram shown here as image 1 and the chart shown as image 2, gives an overview of each mode.

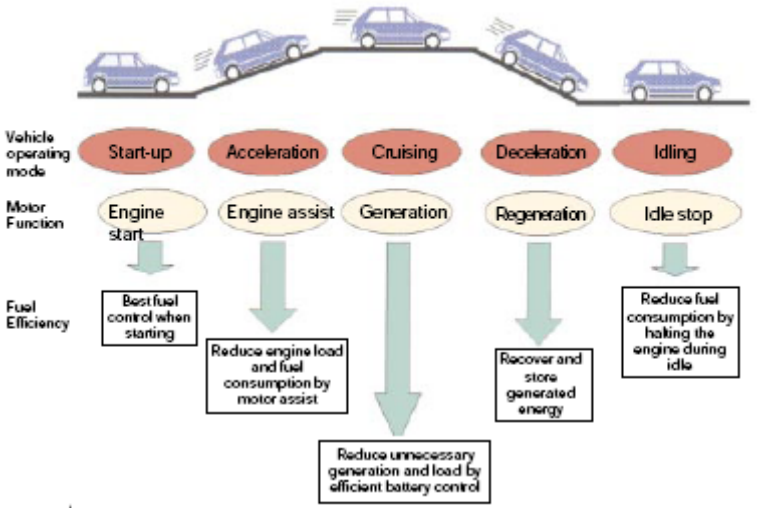

The following screens explain each mode in more detail.

Operating conditions

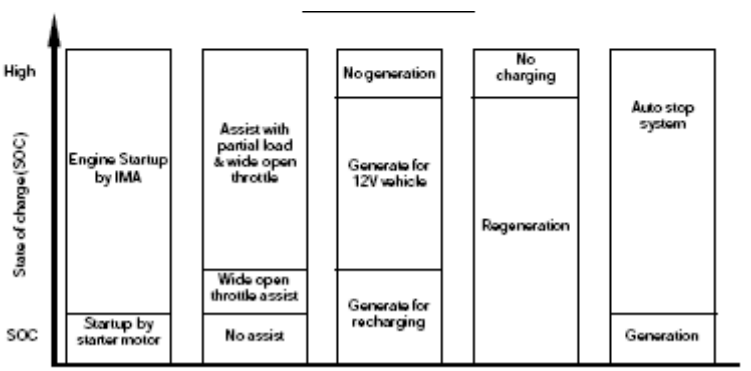

IMA operating details

Engine start-up Under normal conditions, the IMA Motor will immediately start the engine at a speed of 1000 rev/min.

When the state of charge (SOC) of the high voltage battery module is too low, when the temperature is too low, or if there is a failure of the IMA system, the engine will be cranked by the normal 12V starter motor.

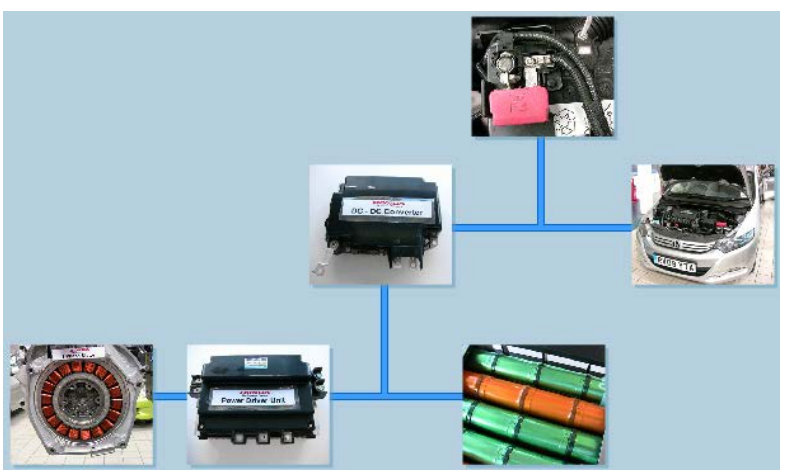

✍ Add arrows to show direction of current flow

Acceleration During acceleration, current from the battery module is converted to AC by the power drive unit (PDU) and supplied to the IMA motor, which functions as a motor. The IMA motor output is used to supplement the engine output so that power available for acceleration is maximized. Current from the battery module is also converted to 12V DC for supply to the vehicle electrical system. This reduces the load that would have been caused by a normal alternator and so improves acceleration.

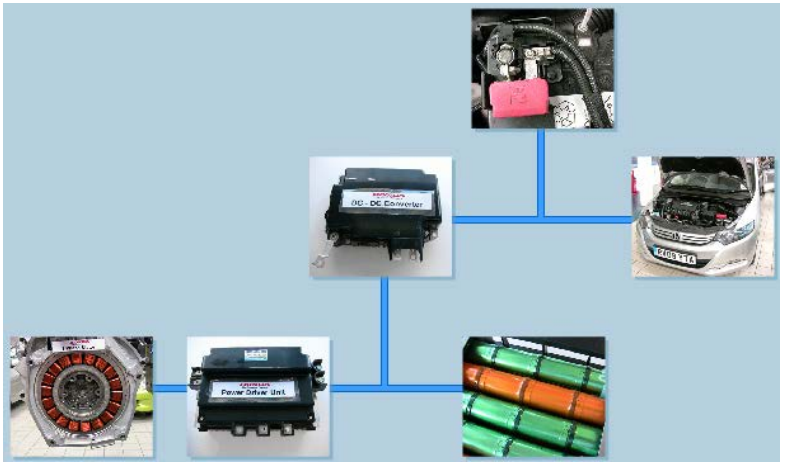

✍ Add arrows to show direction of current flow

When the remaining battery module state of charge is too low, but not at the minimum level, assist will only be available during wide open throttle (WOT) acceleration.

When the remaining state of charge is reduced to the minimum level, no assist will be provided. The IMA system will generate energy only to supply the vehicles 12V system.

Cruising When the vehicle is cruising and the battery module requires charging, the engine drives the IMA Motor, which now acts as a generator. The resulting output current is used to charge the battery module and is converted to 12V DC to supply the vehicle electrical system.

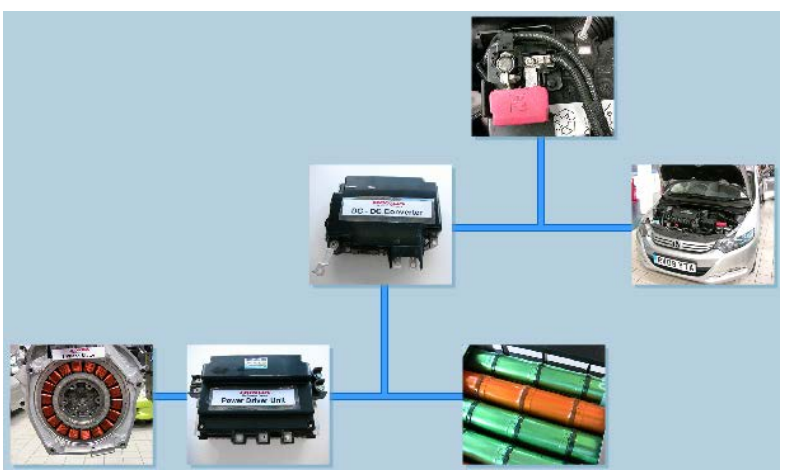

✍ Add arrows to show direction of current flow

When the vehicle is cruising and the high-voltage battery is sufficiently charged, the engine drives the IMA motor. The generated current is

converted to 12V DC and only used to supply the vehicle electrical system.

Deceleration During deceleration (during fuel cut), the IMA motor is driven by the wheels such that regeneration takes place. The generated AC is converted by the power drive unit (PDU) into DC and used to charge the battery module. The DC output of the PDU is also applied to the DC-DC converter which reduces the voltage to 12V, which is supplied to the vehicle electrical system. It is further used to charge the 12V battery as necessary.

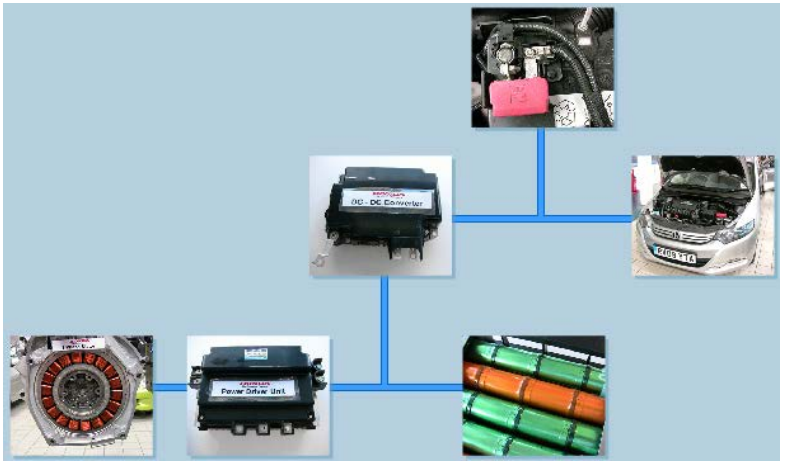

✍ Add arrows to show direction of current flow

During braking (brake switch on), a higher amount of regeneration will be allowed. This will increase the deceleration force so the driver will automatically adjust the force on the brake pedal. In this mode, more charge is sent to the battery module. If the ABS system is controlling the locking of the wheels, an 'ABS-busy' signal is sent to the motor control module. This will immediately stop generation to prevent interference with the ABS system.

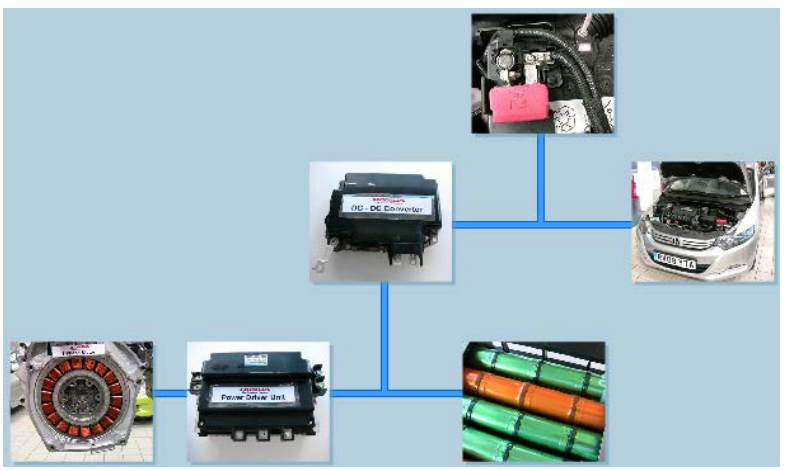

✍ Add arrows to show direction of current flow

When the high voltage battery is fully charged, there will only be generation for the vehicle's 12V system.

Idling During idling, the flow of energy is similar to that for cruising. If the state of charge of the battery module is very low, the motor control module (MCM) will signal the engine control module (ECM) to raise the idle speed to approximately 1100 rev/min.

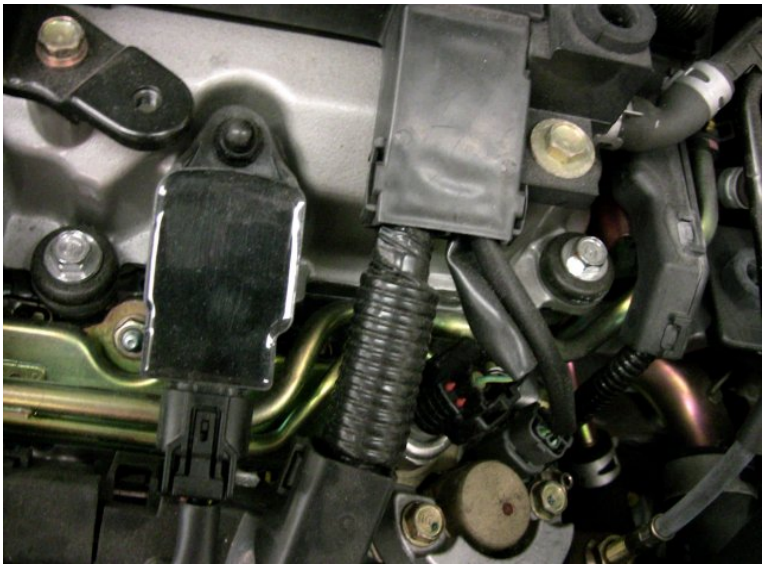

Hybrid engine

Summary the IMA technique used by most hybrid cars can be thought of as a kinetic energy recovery system (KERS).

This is because instead of wasting heat energy from the brakes as the vehicle is slowed down, some is converted to electrical energy and stored in the battery as chemical energy. This is then used to drive the wheels so saving chemical energy from the fuel!

Look back over the previous section and write out a list of the key bullet points here:

Components and system operation

IMA Battery

Introduction The Honda battery module uses nickel metal hydride (Ni-MH) technology for high energy density and long service life. The batteries are constructed in a modular form with a terminal voltage of 100.8V to 144V (or more on the Toyota Prius) and a rated capacity of about 6.5 Ah.

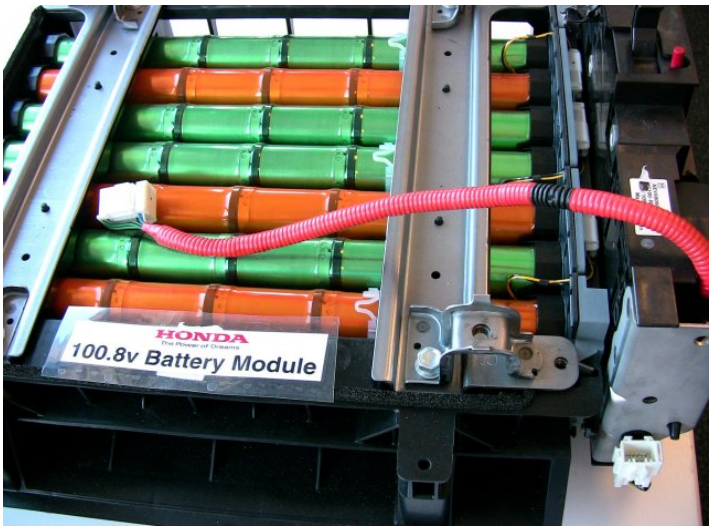

Battery module

If servicing is required to the battery module, refer to manufacturers' instructions as serious injury or even death can occur if the safety precautions are not observed. The batteries typically only weigh about 22 kg. Its operating range is from -30 to +50 ^{0}C.

Battery locations The high voltage batteries are fitted either behind the rear passenger seats or in some cases under the floor of the luggage compartment.

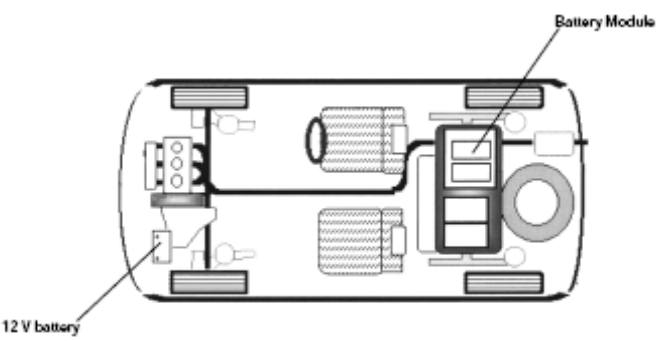

High voltage battery location

Battery module construction The battery module is used to supply high voltage to the electric motor during the assist mode. The battery module is also used to store the regenerated power while cruising, deceleration and braking. Current from the battery module is also converted to 12V DC, which is supplied to the vehicle electrical system. A conventional 12V battery located within the engine compartment is used for the vehicles 12V system.

Battery cells and groups

A battery modules typically consist of:

- Voltage sensors
- Temperature sensors (thermistors)
- Battery cell groups. Each cell group consists of 6 cells, 1 cell equals 1.2V
- Cooling fan
- Terminal plate

The battery cell groups are connected in series by the terminal plates, located on both sides of the battery module.

Battery cell function Charge and discharge are caused by movements of hydrogen when a chemical reaction takes place in the cells. The general construction of a cell is similar to that of a conventional battery but the positive electrode is made of nickel hydroxide. The negative electrode is made of metal hydride (a hydrogen absorbing alloy) and the electrolyte is potassium hydroxide, a strongly alkaline solution.

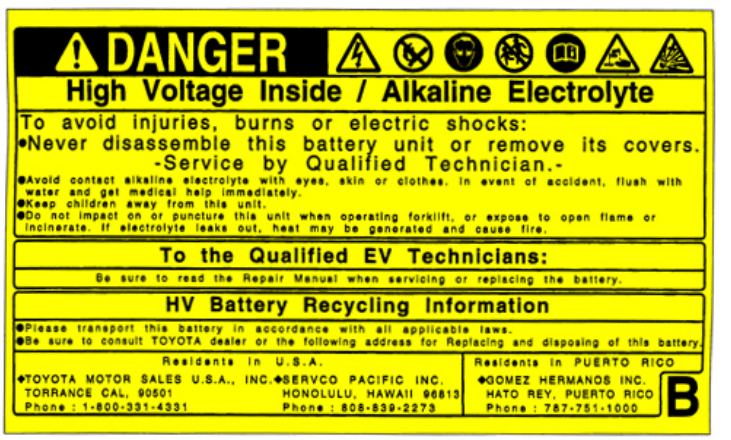

Information plate from a Toyota

Follow safety procedures at all times – a strong alkali is just as dangerous as a strong acid:

- Wear protective clothing:
  - Safety shoes
  - Safety glasses
  - Suitable rubber, latex or nitrile gloves.
- Neutralize electrolyte.

Gloves

Positive electrode reaction In a discharged state the surface of the positive electrode will contain nickel di-hydroxide - Ni(OH)2 and there will be hydroxide ions OH- in the

electrolyte. As the battery is charged the positive electrode loses a hydrogen atom and becomes nickel hydroxide - NiOOH. The freed hydrogen atom joins with the hydroxide ion to form water H2O, and a free electron is released.

✍ Note the reaction here

Negative electrode reaction In a discharged state the negative electrode consists of the metal alloy, surrounded by H2O and free electrons. As the battery is charged a hydrogen atom is dislodged from the water and is absorbed by the metal alloy to make metal hydride (MH). This leaves hydroxide ions OH- in the surrounding electrolyte.

✍ Note the reaction here

Summary Nickel metal hydride (Ni-MH) batteries are used because they are robust, long lasting, charge or discharge quickly and have a high energy density.

The energy store of the future may be the lithium-ion battery. Bosch and Samsung are working together to further develop this technology for automotive applications. The main aim is to improve the energy density of this battery threefold, and to cut costs by two-thirds.

Ni-MH battery cells

Lithium battery pack (Bosch)

Look back over the previous section and write out a list of the key bullet points here:

IMA Motor

Introduction The thin design Honda IMA motor is located between the engine and the transmission. It is a permanent magnet type, brushless DC machine, which operates as a motor or a generator.

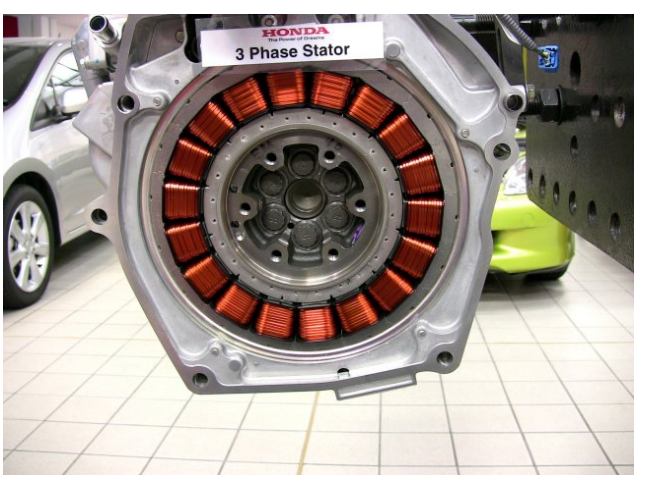

Motor stator in position on a Honda engine

Motor functions The functions of the IMA motor are:

- To assist the engine under certain conditions determined by the motor control module (MCM) for improving fuel economy, low emission and drivability
- To regenerate power under certain conditions to charge the high voltage battery module and the normal 12V battery
- To start the engine when the state of charge is sufficient.

The motor is located between the engine and

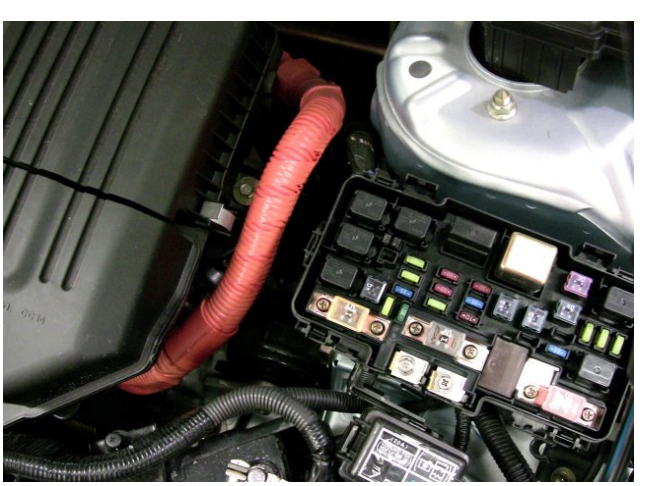

transmission gearbox.

Motor specifications The specifications for the Honda IMA motor shown here are as follows:

- Type DC brushless
- Rated voltage 144V
- Power 10kW/3000 rev/min
- Torque 49 Nm/1000 rev/min

The rated voltage will vary between about 100V and almost 300V. These figures for power and torque are typical but other motors will vary.

IMA motor In a conventional DC motor, the housing contains field magnets, the rotor is made up of coils wound in slots in an iron core and is connected to a commutator.

However, in a brushless motor the conventional DC motor is turned inside out. The rotor becomes a permanent magnet and the stator becomes the wound iron core. The advantages are:

- Better cooling
- No brushes to wear out
- No maintenance.

The disadvantages, however, are:

- More complex motor control circuits
- Expensive rare earth magnets have to be used because conventional iron magnets demagnetize when a large current is applied to them.

Power cable connected to the motor (remember, orange cables are high voltage)

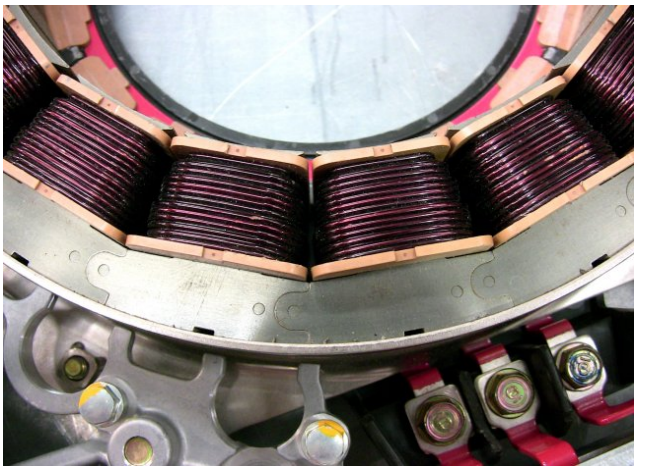

Honda motor stator

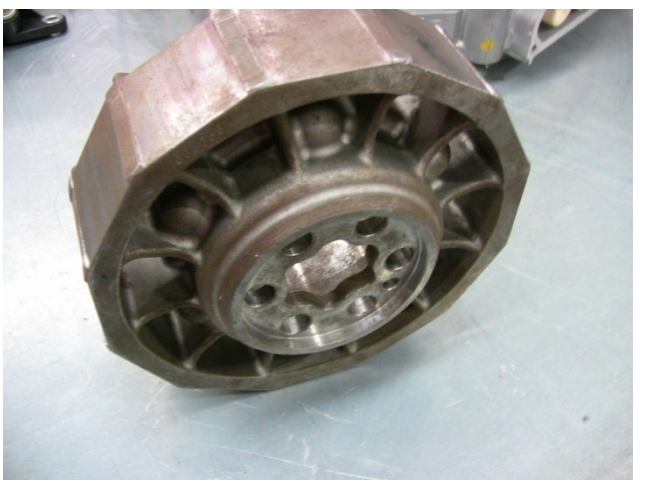

Permanent magnet rotor

Stator The stator is constructed of 18 coils surrounding a rotor containing 12 poles. Although the motor is a DC type you should note that the current supplied to it must be AC. This is because in normal DC motors (brush type) the current is reversed by the brushes and commutator. If the current is not reversed the rotor would come to a stop. The force that rotates the rotor is the interaction of the two magnetic fields produced by the stator coils and the rotor. These fields must remain constant in magnitude and relative orientation to produce a constant torque.

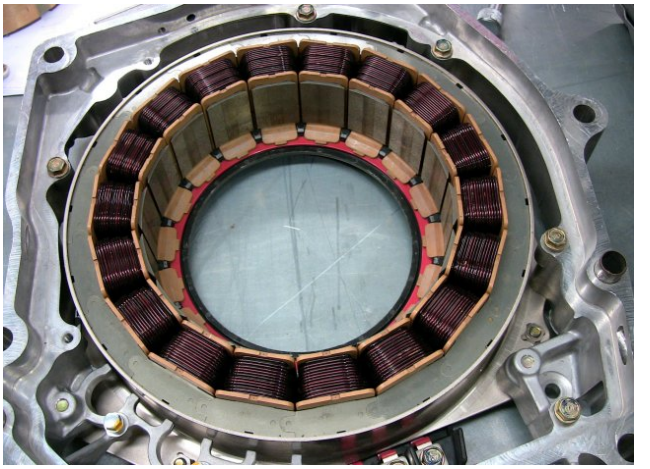

IMA motor stator removed from the vehicle

Stator coil groups To maintain a constant field the stator coils are divided in to six groups of three. Each group has three electrical phases in each coil designated as: U, V and W. Switching of current for each phase of these coils takes place in a power driver unit (PDU) when the motor is acting as a motor or as a generator. Maximum torque is produced when the rotor and the stator fields are at 90 degrees to each other.

✍ Sketch the animation showing a simplified switching sequence

Sensor disk To control the stator coil fields correctly the relative position of the rotor must be known. A sensor disk is therefore attached to the rotor and is divided into 12 partitions - 6 high and 6 low. These are detected by three commutation sensors.

The sensor ring has high and low sections that are detected by the commutation sensors

Commutation sensors There are three commutation sensors. They act in a similar way to an ABS sensor where metal teeth passing on a sensor wheel induce a signal current in the sensor. Each sensors is composed of two small magnetic reluctance elements that detect the presence of a high partition or low partition passing the sensor. The two variable magnetic reluctance elements transform their signal from a variable to a high (1) or low (0) signal.

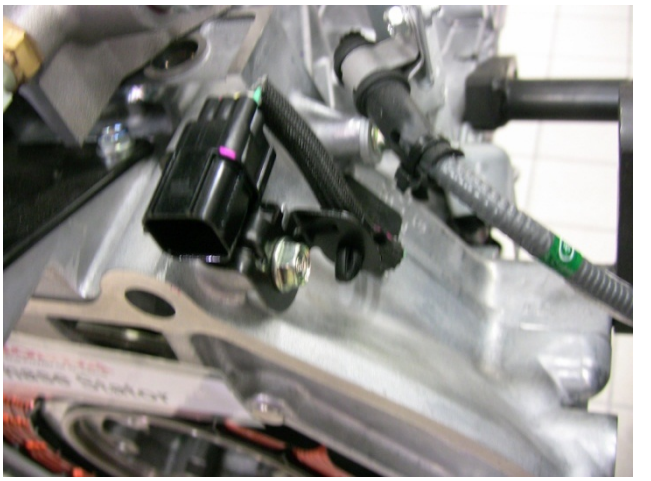

Commutation sensor connection

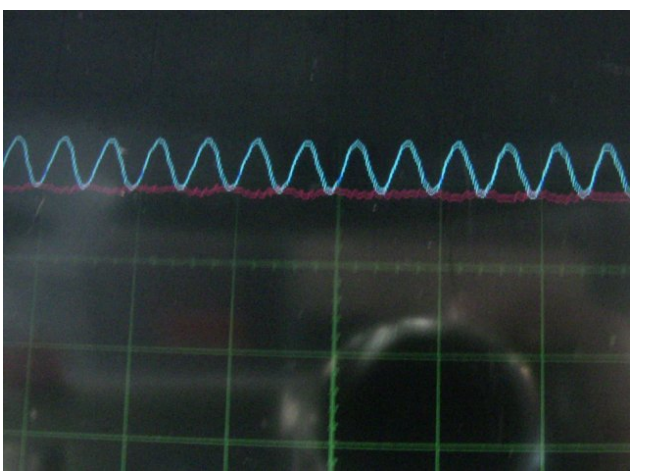

Sensor signal

Electric terminals Push on or ring and screw type terminals are used on the motor. Orange coloured cables are attached, and make the connection between the IMA motor and the power drive unit (PDU) at the rear of the vehicle.

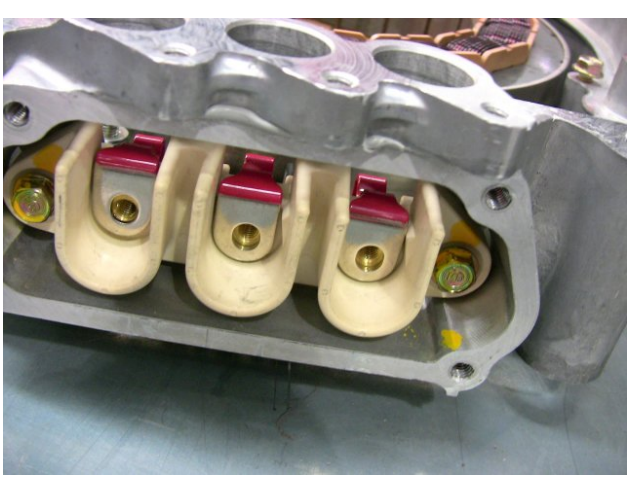

Motor terminals for the high voltage cables (which always have an orange covering)

Summary Developments are on-going in the hybrid motor field. However, the technology of stationary coils rotating permanent magnets seems to be well-developed.

A range of switching and control methods are used but in simple terms the stator coils are energised in sequence to drive the rotor.

When the rotor is driven by the wheels (on deceleration or braking) it induces electrical energy in the coils and this is used to charge the battery via suitable rectification and voltage controls.

A Bosch hybrid transmission and IMA system is shown here.

Transmission for a hybrid (Source: Photo Bosch)

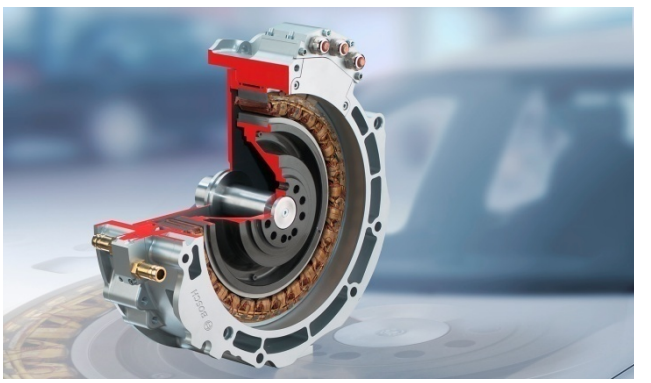

IMA motor/generator (Source: Photo Bosch)

Hybrid IMA control system

Inputs and outputs Like any other complex control system, the control of the hybrid IMA system can be represented as a block diagram showing inputs and outputs. The IMA system can seem more complex because the motor changes to become a generator and back to a motor depending on road conditions. However, thinking of the system as shown here will help with your understanding of the operation.

Draw the basic input-control-output block diagram

Block diagram The diagram on this screen expands the basic block diagram. In this case the main component locations are shown. Roll the mouse over each block for more information.

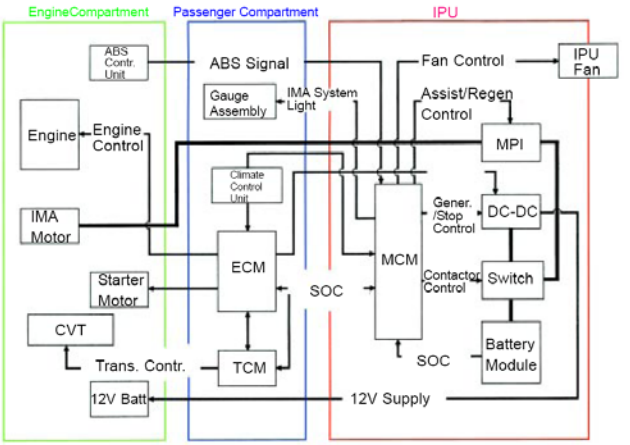

Block diagram showin all components and their locations

Motor control module (MCM) Signals from the three commutation sensors are sent to the MCM. The MCM is connected to the power drive unit making it possible for the battery module and the IMA motor to interact.

Motor control unit

Power drive unit (PDU) The three signals coming from the commutation sensor on the IMA motor are sent to the MCM and transferred by the module into high and low signals for the stator's coil phases U, V, and W. According to these signals the circuits from the battery module to motor, or from motor to battery are made by the power drive unit.

Power drive unit

The PDU consists of six power switches with a gate drive circuit. The switches are insulated gate bipolar transistors (IGBT), which are able to control very large amount of power with a very small signal.

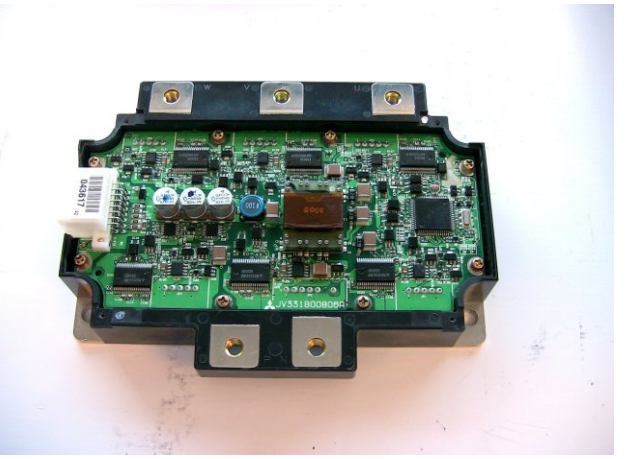

Inside a PDU

Motor mode There are six motor commutation steps and as each step is made, another signal is generated. All six steps are different and none has a position, where U, V, and W are all low or all high. Click the button to play the six steps.

Two IGBTs in the same line never switch on together. It is always one IGBT in the upper side, and one in the lower side. This is very similar to how a stepper motor driver circuit works.

Generation mode When the motor is acting as a generator power is transferred from the stator through the PDU diodes controlled by signals from the commutations sensors. The PDU works in a similar way to a normal alternator rectifier.

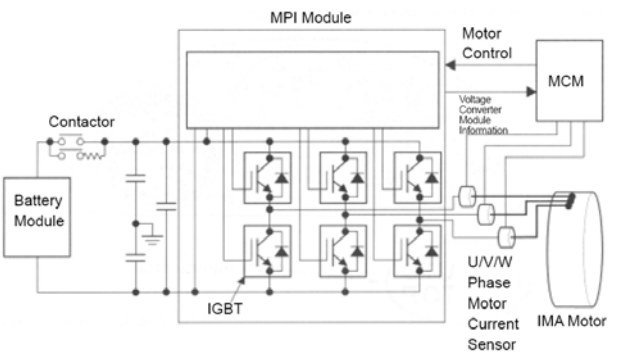

Motor circuit operation

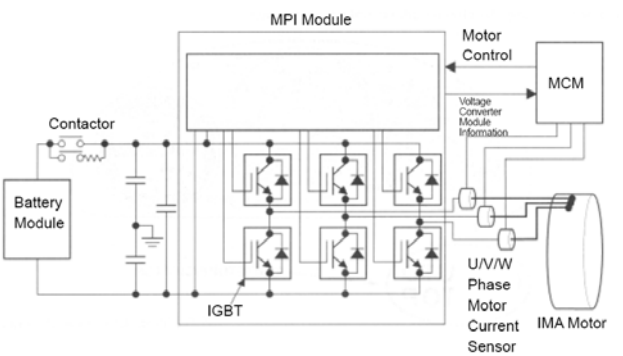

Generator circuit operation

DC to DC converter The DC-DC converter takes the high battery module voltage and converts it to charge the 12V battery and run the system.

Charging the battery and running the low voltage system from the high voltage system is more efficient than using a standard alternator.

DC-DC converter

Other features The other key features used by many hybrid vehicles to improve efficiency are:

Idle stop/start – to save fuel the engine is stopped, at traffic lights for example, and restarted almost instantly by the IMA

Braking control – the most important aspect of a hybrid is collecting energy normally lost on braking. If the normal brake operation is also electronically controlled so that more regenerative effect is used, efficiency is improved further.

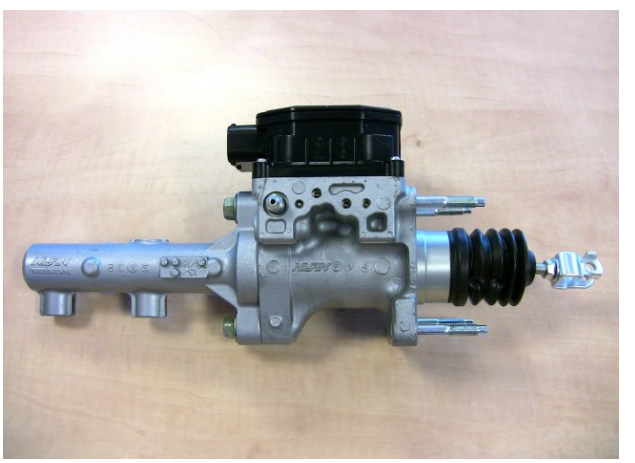

Electronically controlled brake master cylinder

Engine valve control – to further enhance the regenerative effect, the braking effect of the internal combustion engine is reduced by preventing the valves operating

AC control – on some systems the AC is run by an electric motor so that it continues to work in stop/start conditions

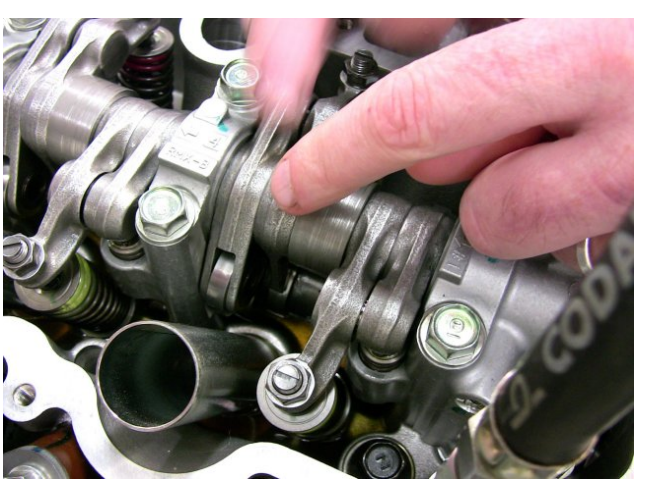

Valve control allows more braking to be done by the motor/generator

Instrumentation feedback – it is well known that on any vehicle, a significant effect on economy is

driving style. Drivers who have opted for a hybrid tend to be looking for economy so are willing to change their style even further based on feedback. Some instruments show images such as growing green trees to indicate driving performance improvement!

Feedback on economy/performance helps to change driving style and improve efficiency even more

Summary The efficiency of the hybrid car is now quite significantly. Sophisticated control systems and highly developed and efficient component designs are the reason for this.

However, remember that as with any complex system, it can be thought of and inputs and outputs – and this makes it much easier to understand.

Honda Hybrid

Look back over the previous section and write out a list of the key bullet points here:

Remove and replace

Introduction For all remove and replace operations on a hybrid vehicle, it is essential to follow manufacturers' instructions. This short section outlines the motor removal and replacement procedure on a Honda. This is not intended to replace a workshop manual but rather to give an overview of the information supplied by manufacturers.

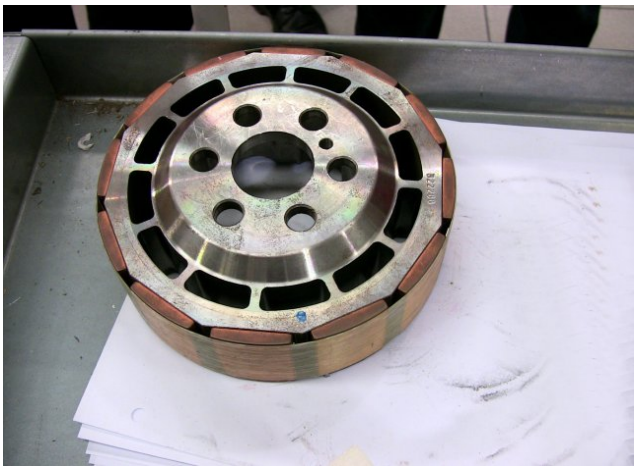

Magnetic rotor

Make sure you have covered the safety section before carrying out any work on a hybrid vehicle.

Switch off the high voltage battery and disconnect the 12V battery.

Also, note the points about the motor on the following screen.

IMA motor removal/installation The motor rotor contains very strong magnets and should be handled with special care.

- Do not use the motor rotor if the fiberglass band is damaged. If the band breaks during use, magnets may come loose from the motor rotor.
- Keep the motor rotor away from magnetically sensitive devices
- Do not blow air near the rotor, as metal particles may get on the magnet
- Store the rotor in the designated storage box and hold it away from sensitive devices during storage

If the motor rotor is installed by hand, it may suddenly be pulled towards the motor stator with great force causing serious hand or finger injury. Always use the special tool to remove or install a motor rotor.

1. First remove the transmission and the clutch.

2. Remove the motor power cables from the motor stator terminals.

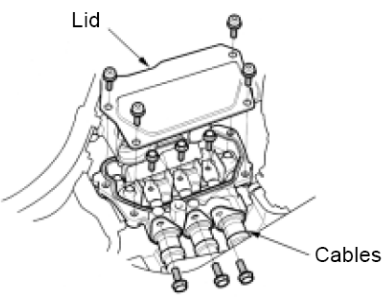

Steps 1 and 2

3. Remove the support (A). NOTE: When installing the support, align the mark (B) on the drive plate and the hole (C) on the support.

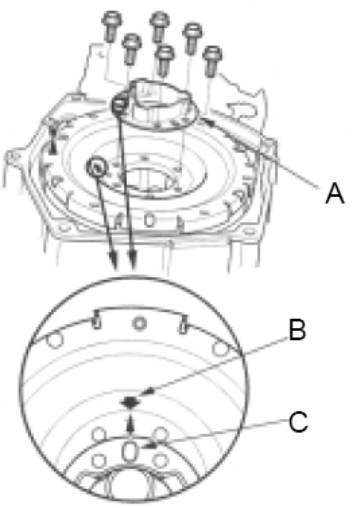

Step 3

4. Remove the drive plate (A). NOTE: When installing the drive plate, check the insulating paint for damage.

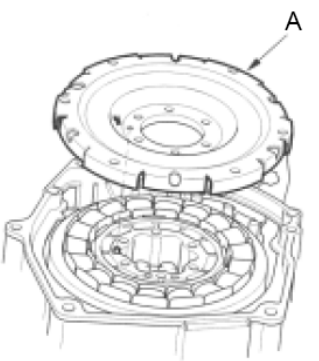

Step 4

5. Install a plastic film (A) between the motor rotor (B) and motor stator (C).

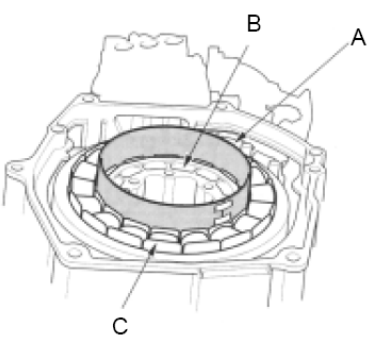

Step 5

6. Remove three of the six bolts (A) as shown.

7. Install the rotor puller guide pins, then remove the remaining three bolts (A), then remove the rotor spacer (B)

8. Attach the rotor puller with the bolts supplied

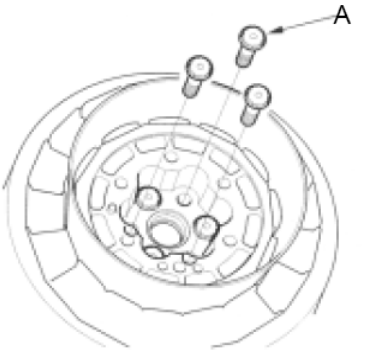

Step 6

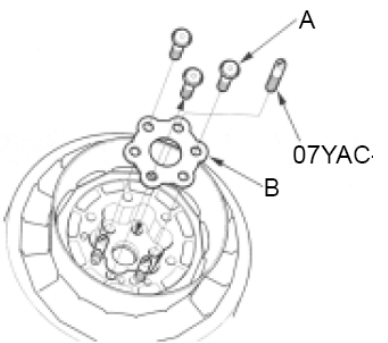

Step 7

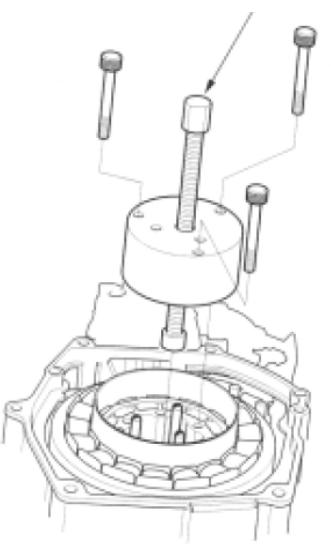

Step 8

9. Remove the motor rotor (A).

10. Remove the bolts (A), then the motor stator (B)

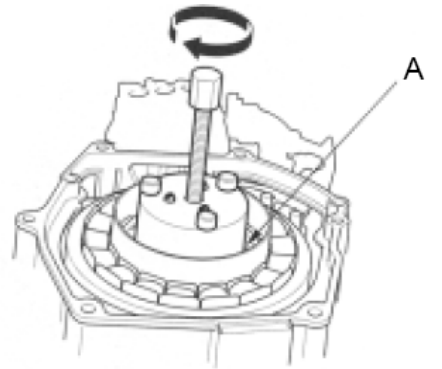

Step 9

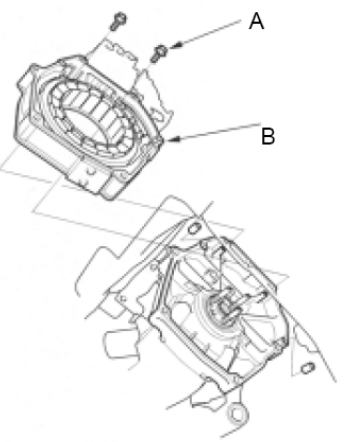

Step 10

Replacement Install the parts in the reverse order of removal.

NOTE:

- Connect the motor power cable with the U phase, V phase and W phase in the correct positions
- Set the rotor on the special tool, and install the rotor with the end of the special tool extended
- Turn the handle of the special tool slowly when inserting the rotor into the stator. The rotor is drawn into the stator by magnetic force

Job done!

Look back over the previous section and write out a list of the key bullet points here:

Diagnostics

Introduction Diagnosing faults on a hybrid vehicle is no different from any other type – you need knowledge of the system, the correct data, and the ability to work logically and make decisions based on observations and measurements.

Vehicle protection fitted

Self-diagnosis function The motor control module (MCM) constantly monitors the condition of circuits for the sensors and units associated with the IMA system. In the rare event that an abnormality is detected, the MCM will turn on the IMA system warning lamp located in the gauge assembly in order to notify the driver.

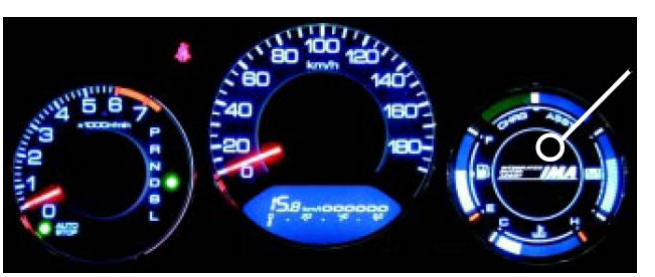

IMA system warning lamp

Diagnostic trouble code (DTC) DTCs are recorded in the MCM based on the detected area of abnormality. If a tester is then connected to the data link connector (DLC), it will be possible to read this code.

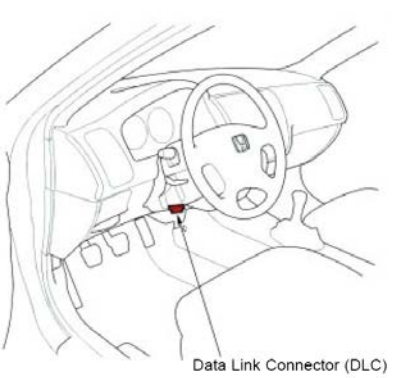

Black box data It is also possible to display MCM operation data on a suitable tester so that diagnostic and maintenance efficiency may be improved.

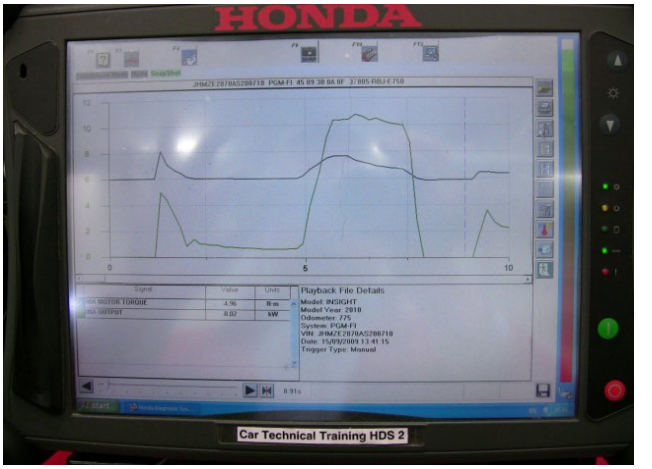

Operating data

Taking readings Dedicated test equipment allows readings to be displayed of voltages and signals relating to the hybrid control system. In this case the state of items such as relays are shown together with voltage readings from the battery module.

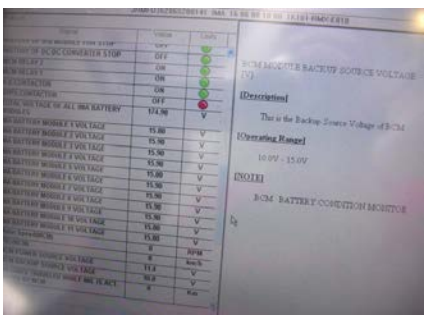

Summary We have become quite familiar with the concept of an engine control module (ECM). A key thing to remember is that a motor control module (MCM) carries out very similar functions. It monitors sensor inputs and controls actuator outputs – it is just that in this case one of the outputs is a very powerful motor/generator.

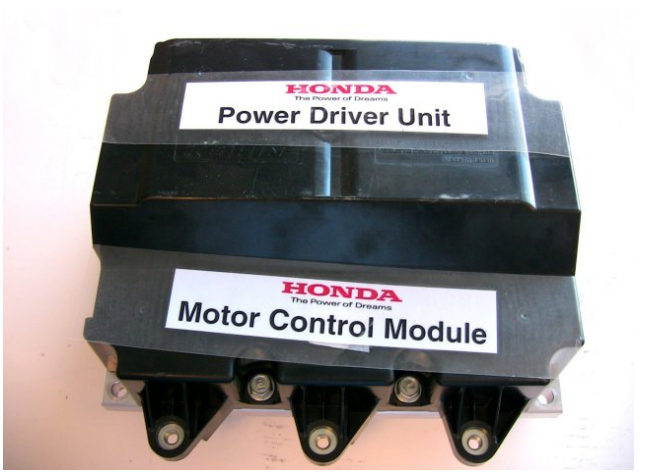

Look back over the previous section and write out a list of the key bullet points here: